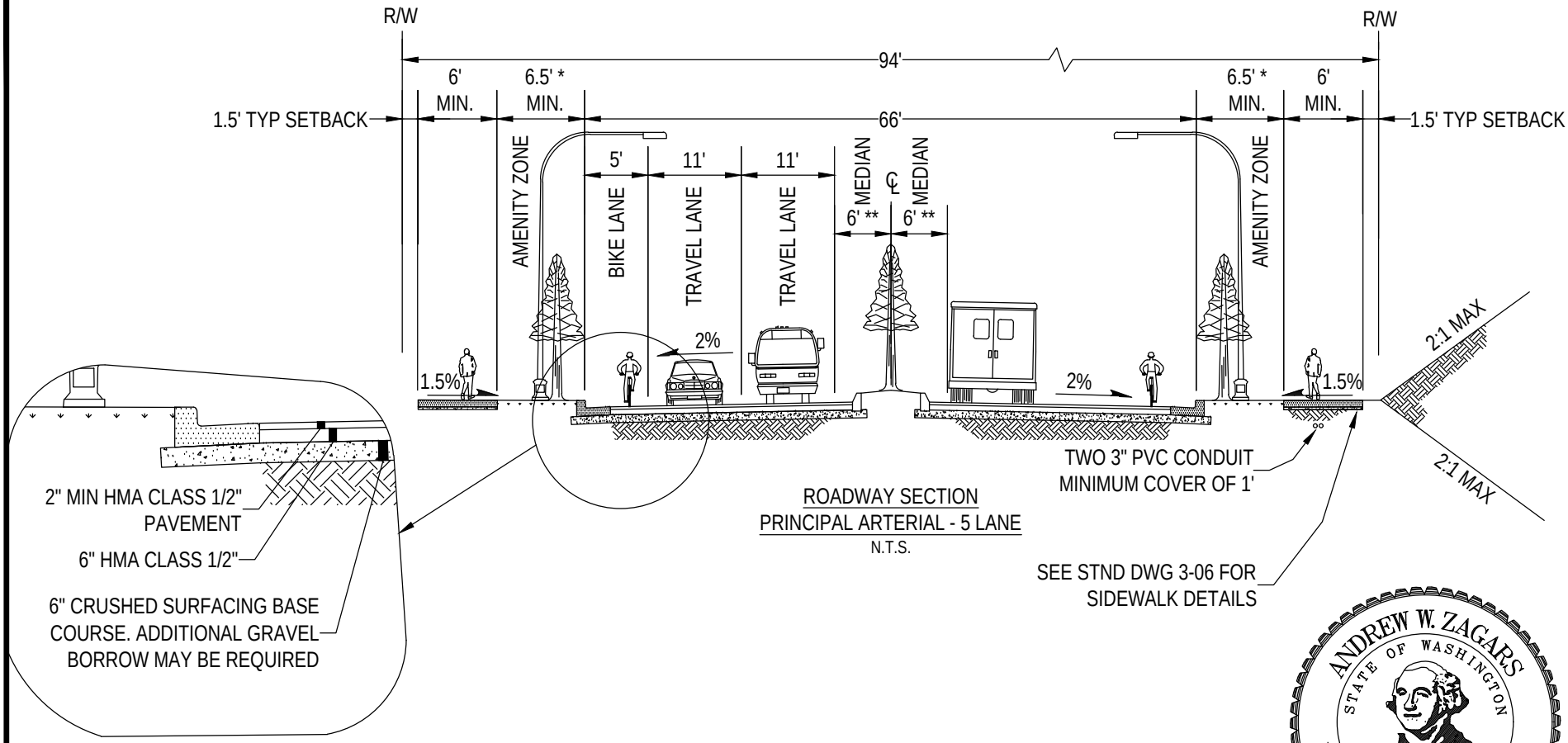

ROADWAY SECTION
PRINCIPAL ARTERIAL - 5 LANE
N.T.S.

Preliminary

11/09/2016 1:37:18 PM

NOTES:

1. NO ON-STREET PARKING PERMITTED.
2. SUBGRADE SHALL BE COMPACTED TO 95% INCLUDING UNDER CURB, GUTTER, AND SIDEWALK.
3. PROOF ROLL OF SUBGRADE MAY BE REQUIRED BY ENGINEER.
4. SIDEWALK WIDTH IS DETERMINED BY ADJACENT LANDUSE.

* MAY BE ELIMINATED OR WIDTH REDUCED WHERE THERE IS INSUFFICIENT RIGHT-OF-WAY OR CRITICAL AREAS, SUBJECT TO CITY ENGINEER'S APPROVAL.

** MAY BE REDUCED WHERE THERE IS INSUFFICIENT RIGHT-OF-WAY OR OTHER FACTORS, SUBJECT TO CITY ENGINEER'S APPROVAL. FACE OF MEDIAN CURB IS OFFSET ONE FOOT FROM TRAVEL LANE.

REV

CITY OF SAMMAMISH
DEPARTMENT OF PUBLIC WORKS

ROADWAY SECTION
PRINCIPAL ARTERIAL

APPROVED BY
CITY ENGINEER _____ DATE _____

DWN	CKD	DATE	FILE
TTC	AWZ	AUG-XX-2015	FIG01-01

REV. NO. X

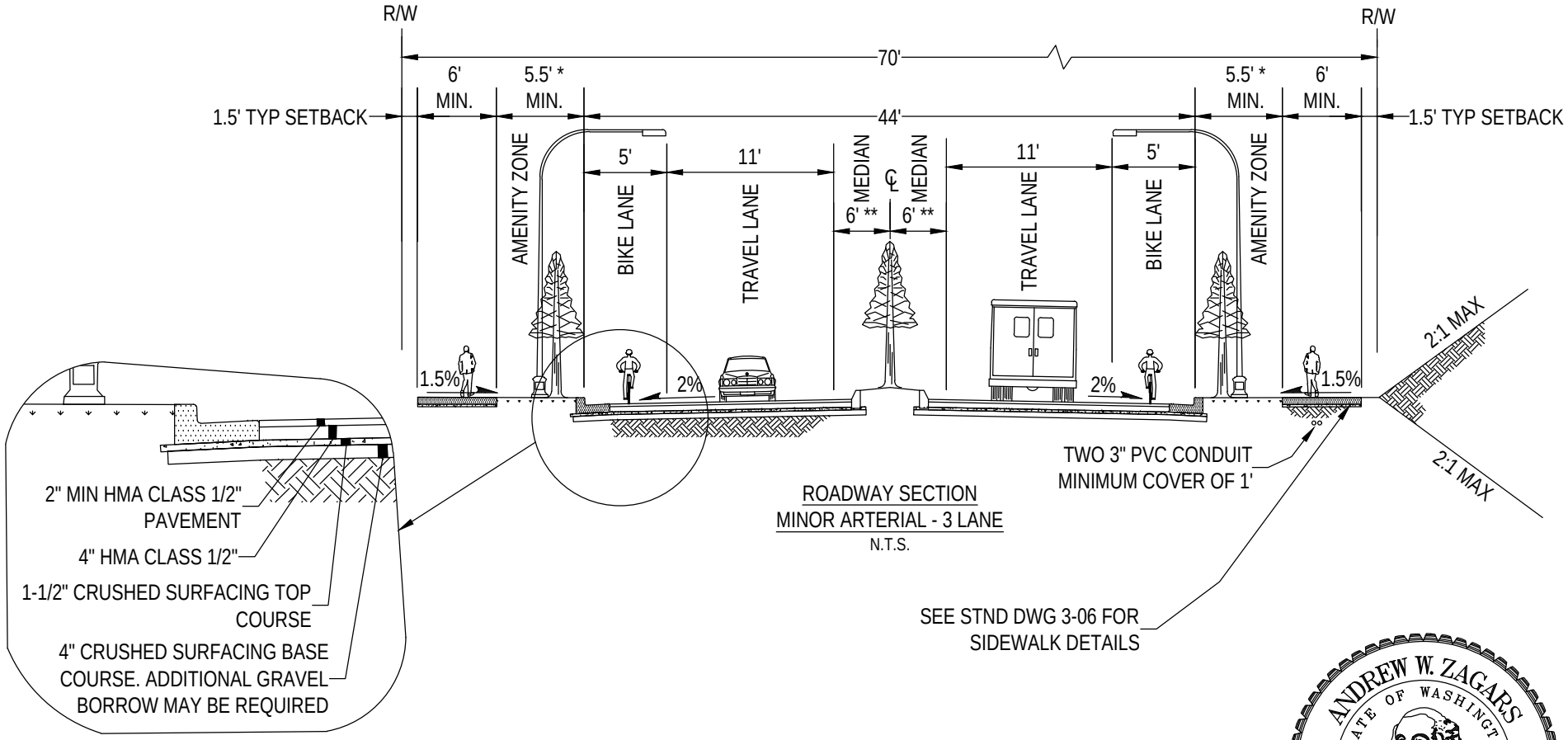

ROADWAY SECTION
MINOR ARTERIAL - 3 LANE
N.T.S.

NOTES:

1. WIDTH OF ROADWAY SECTION AND RIGHT-OF-WAY MAY BE INCREASED TO ALLOW PARKING.
2. SUBGRADE SHALL BE COMPACTED TO 95% INCLUDING UNDER CURB, GUTTER, AND SIDEWALK.
3. PROOF ROLL OF SUBGRADE MAY BE REQUIRED BY ENGINEER.
4. SIDEWALK WIDTH IS DETERMINED BY ADJACENT LANDUSE.

* MAY BE ELIMINATED OR WIDTH REDUCED WHERE THERE IS INSUFFICIENT RIGHT-OF-WAY OR CRITICAL AREAS, SUBJECT TO CITY ENGINEER'S APPROVAL.

** MAY BE REDUCED WHERE THERE IS INSUFFICIENT RIGHT-OF-WAY OR OTHER FACTORS, SUBJECT TO CITY ENGINEER'S APPROVAL. FACE OF MEDIAN CURB IS OFFSET ONE FOOT FROM TRAVEL LANE.

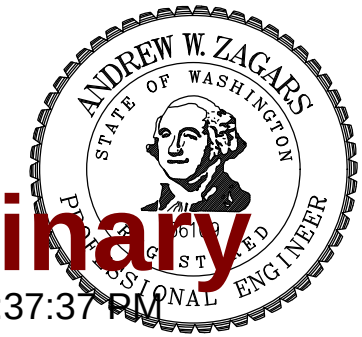

Preliminary

11/09/2016 1:37:37 PM

CITY OF SAMMAMISH
DEPARTMENT OF PUBLIC WORKS

ROADWAY SECTION
MINOR ARTERIAL

APPROVED BY
CITY ENGINEER _____ DATE _____

REV	DWN	CKD	DATE	FILE
	XXX	XXX	AUG-XX-2015	FIG01-02

REV. NO. X

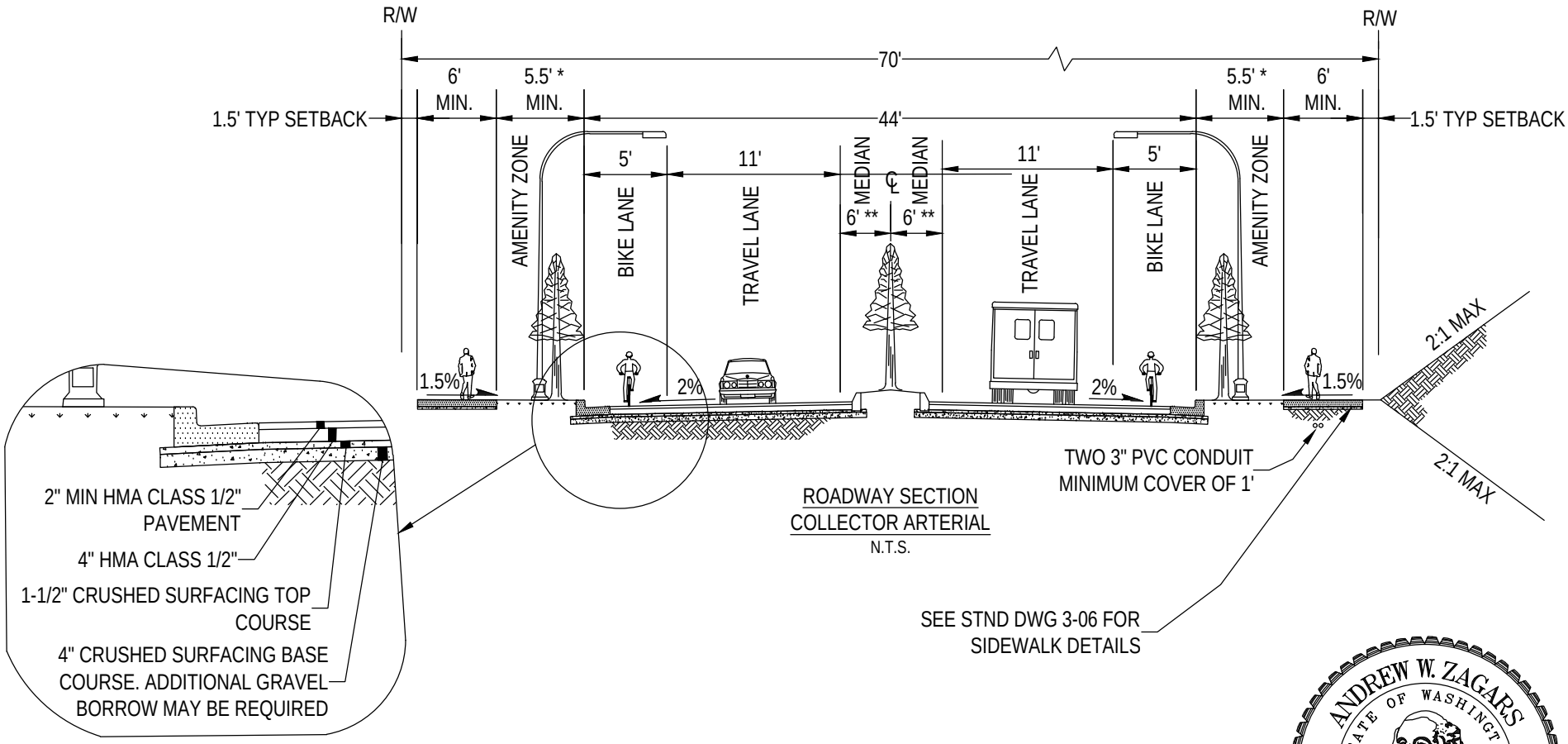

ROADWAY SECTION
COLLECTOR ARTERIAL
N.T.S.

NOTES:

1. WIDTH OF ROADWAY SECTION AND RIGHT-OF-WAY MAY BE INCREASED TO ALLOW PARKING.
2. SUBGRADE SHALL BE COMPACTED TO 95% INCLUDING UNDER CURB, GUTTER, AND SIDEWALK.
3. PROOF ROLL OF SUBGRADE MAY BE REQUIRED BY ENGINEER.
4. SIDEWALK WIDTH IS DETERMINED BY ADJACENT LANDUSE.

* MAY BE ELIMINATED OR WIDTH REDUCED WHERE THERE IS INSUFFICIENT RIGHT-OF-WAY OR CRITICAL AREAS, SUBJECT TO CITY ENGINEER'S APPROVAL.

** MAY BE REDUCED WHERE THERE IS INSUFFICIENT RIGHT-OF-WAY OR OTHER FACTORS, SUBJECT TO CITY ENGINEER'S APPROVAL. FACE OF MEDIAN CURB IS OFFSET ONE FOOT FROM TRAVEL LANE.

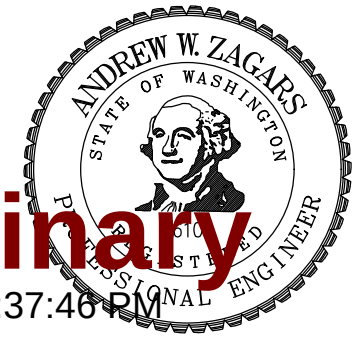

Preliminary

11/09/2016 1:37:46 PM

CITY OF SAMMAMISH
DEPARTMENT OF PUBLIC WORKS

ROADWAY SECTION
COLLECTOR ARTERIAL

APPROVED BY
CITY ENGINEER _____ DATE _____

REV	DWN	CKD	DATE	FILE
	XXX	XXX	AUG-XX-2015	FIG01-03

REV. NO. X

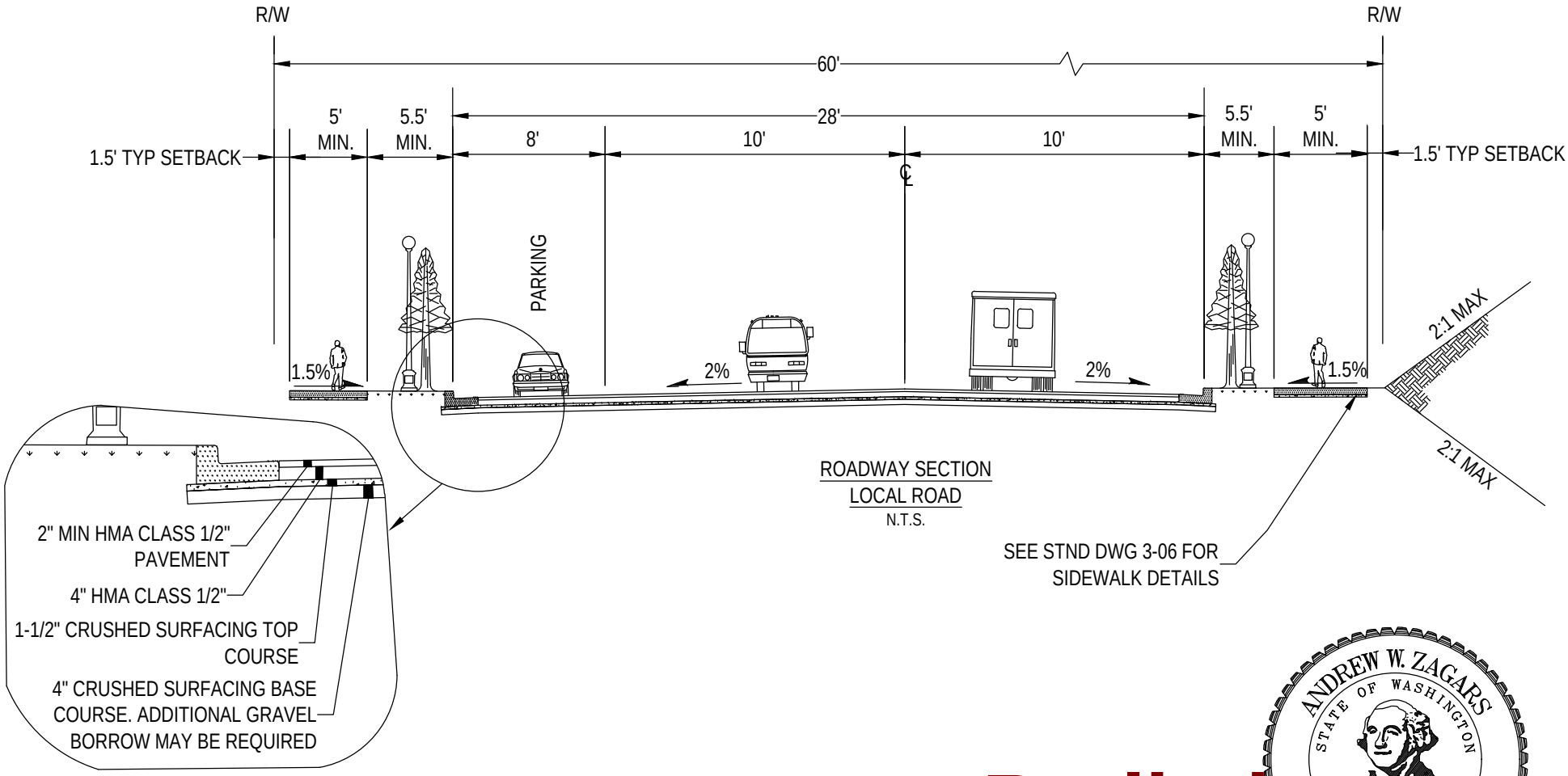

ROADWAY SECTION
LOCAL ROAD
N.T.S.

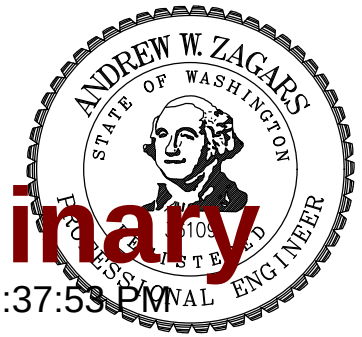

Preliminary

11/09/2016 1:37:53 PM

NOTES:

1. PARKING ON ONE SIDE OF ROAD ONLY. APPROVAL OF WHICH SIDE BY CITY ENGINEER.
2. PARKING LANE BASED ON TRAFFIC GENERATION.
3. INSTALL NO PARKING SIGNS ON ONE SIDE OF STREET PER DIRECTION OF ENGINEER.
4. SUBGRADE SHALL BE COMPACTED TO 95% INCLUDING UNDER CURB, GUTTER, AND SIDEWALK.
5. PROOF ROLL OF SUBGRADE MAY BE REQUIRED BY ENGINEER.
6. SIDEWALK WIDTH IS DETERMINED BY ADJACENT LANDUSE.

CITY OF SAMMAMISH
DEPARTMENT OF PUBLIC WORKS

ROADWAY SECTION
NON-ARTERIAL ROADWAY

APPROVED BY
CITY ENGINEER _____ DATE _____

REV	DWN	CKD	DATE	FILE
	XXX	XXX	AUG-XX-2015	FIG01-05

REV. NO. X

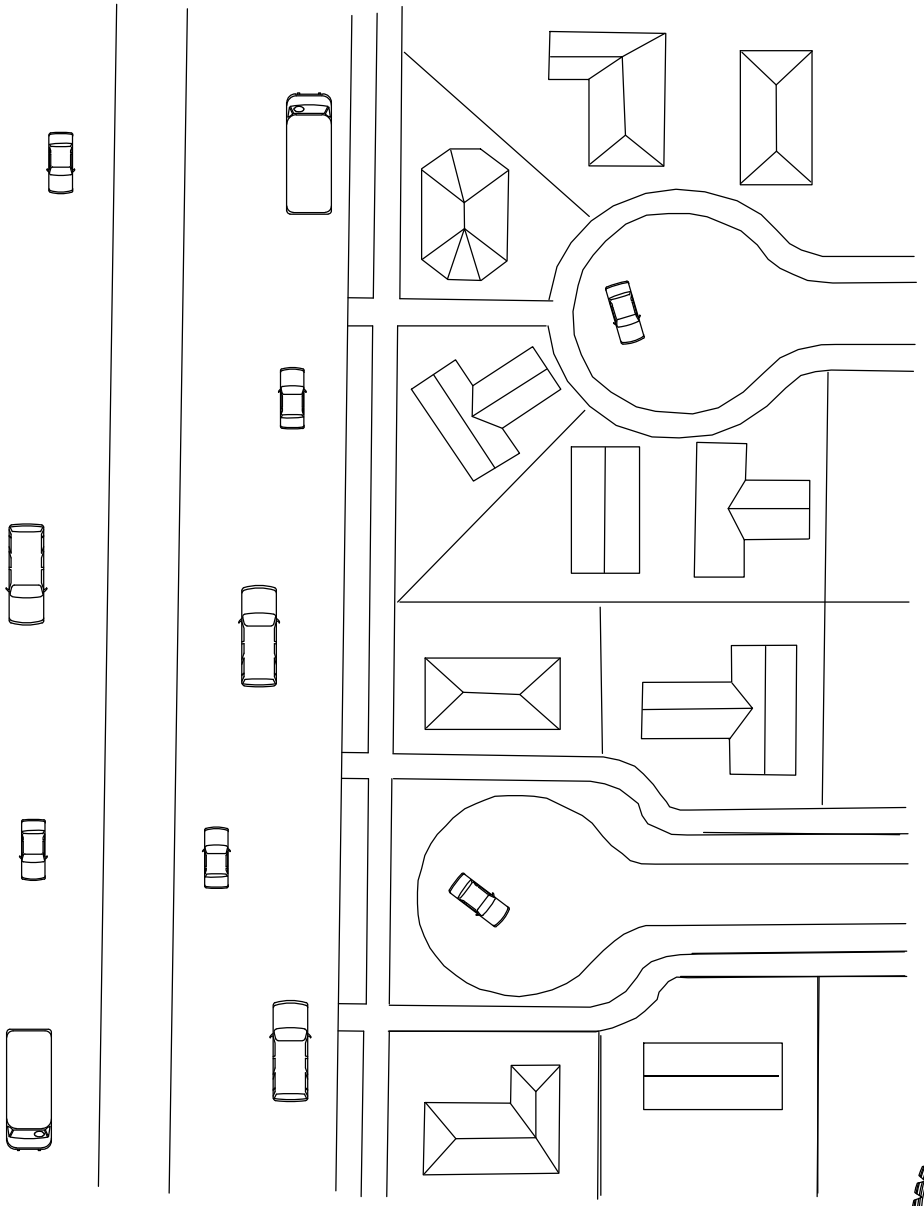

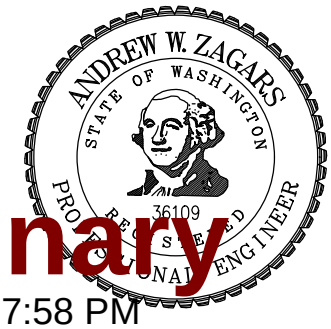

Preliminary

11/09/2016 1:37:58 PM

CITY OF SAMMAMISH
DEPARTMENT OF PUBLIC WORKS

PEDESTRIAN BIKE PATH CONNECTION BETWEEN THROUGH STREET AND CUL-DE-SAC

APPROVED BY
CITY ENGINEER _____ DATE _____

REV	DWN	CKD	DATE	FILE
	XXX	XXX	AUG-XX-2015	FIG01-06

REV. NO. X

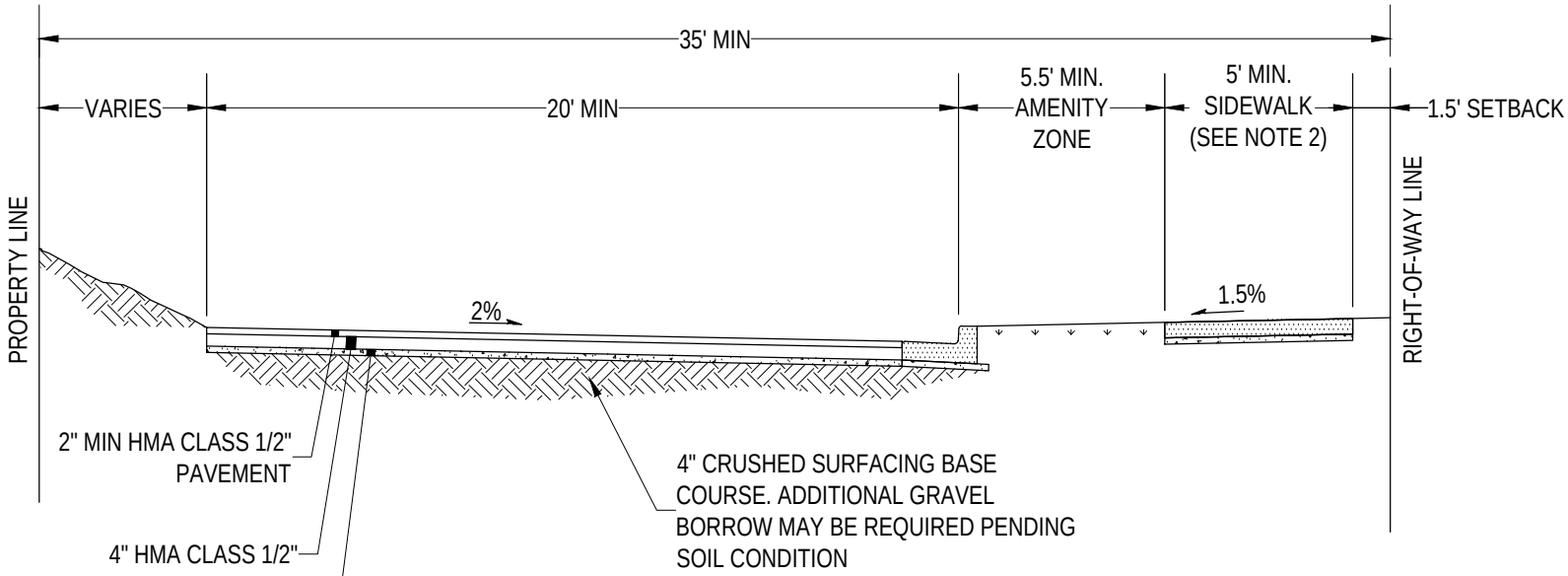

ROADWAY SECTION
HALF STREET

N.T.S.

NOTES:

1. EDGE OF PAVEMENT TO BE CONSTRUCTED AS SHOWN FOR CUT OR FILL SECTION AS APPROPRIATE.
2. SEE STND DWG 3-06 FOR SIDEWALK DETAILS.
3. PROOF ROLL OF SUBGRADE MAY BE REQUIRED BY ENGINEER.
4. IF PAVING SEAM IS REQUIRED, IT SHALL BE PLACED AT FUTURE CROWN LOCATION.
5. INSTALL NO PARKING SIGNS ON BOTH SIDE OF STREET PER DIRECTION OF ENGINEER.

Preliminary

11/09/2016 1:38:01 PM

ANDREW W. ZAGARS
STATE OF WASHINGTON
36
REGISTERED
PROFESSIONAL ENGINEER

CITY OF SAMMAMISH
DEPARTMENT OF PUBLIC WORKS

NON–ARTERIAL ROADWAY
SECTION HALF STREET

APPROVED BY
CITY ENGINEER _____ DATE _____

REV	DWN	CKD	DATE	FILE
	XXX	XXX	AUG–XX–2015	FIG01–07

REV. NO. X

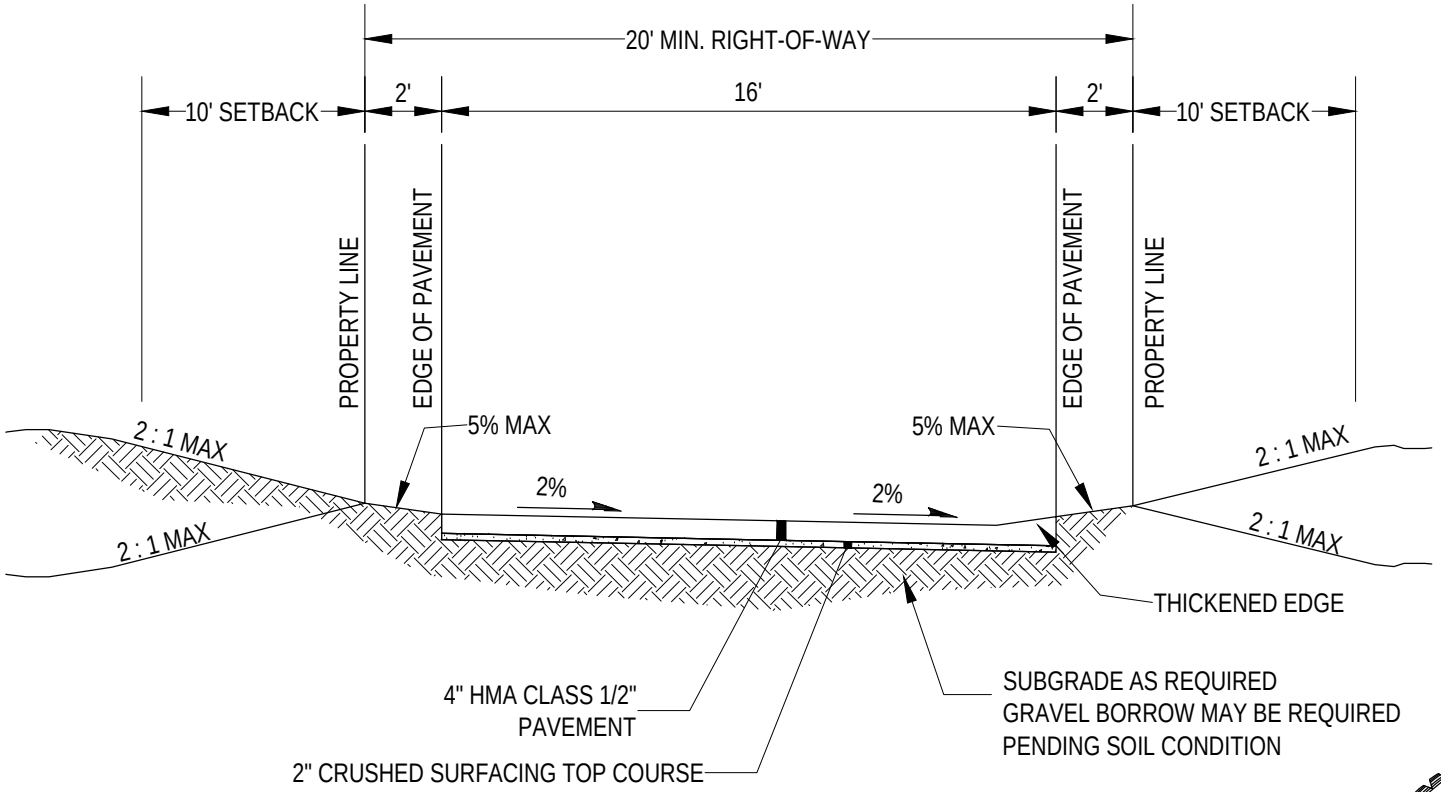

ROADWAY SECTION
TYPICAL ALLEY

N.T.S.

Preliminary

11/09/2016 1:38:04 PM

NOTES:

1. REFER TO PROVISIONS FOR REAR AND SIDE YARD SETBACKS IN DEVELOPMENT CODE.
2. DRAINAGE TO BE COLLECTED AT LOWER END OF ALLEY.
3. PROOF ROLL OF SUBGRADE MAY BE REQUIRED BY ENGINEER.
4. ALL UTILITY LIDS TO BE ADJUSTED TO GRADE.
5. FOR USE IN NEW DEVELOPMENT.
6. INSTALL NO PARKING SIGNS ON BOTH SIDE OF STREET PER DIRECTION OF ENGINEER.

CITY OF SAMMAMISH
DEPARTMENT OF PUBLIC WORKS

ROADWAY SECTION
TYPICAL ALLEY

APPROVED BY
CITY ENGINEER _____ DATE _____

REV	DWN	CKD	DATE	FILE
	XXX	XXX	AUG-XX-2015	FIG01-08

REV. NO. X

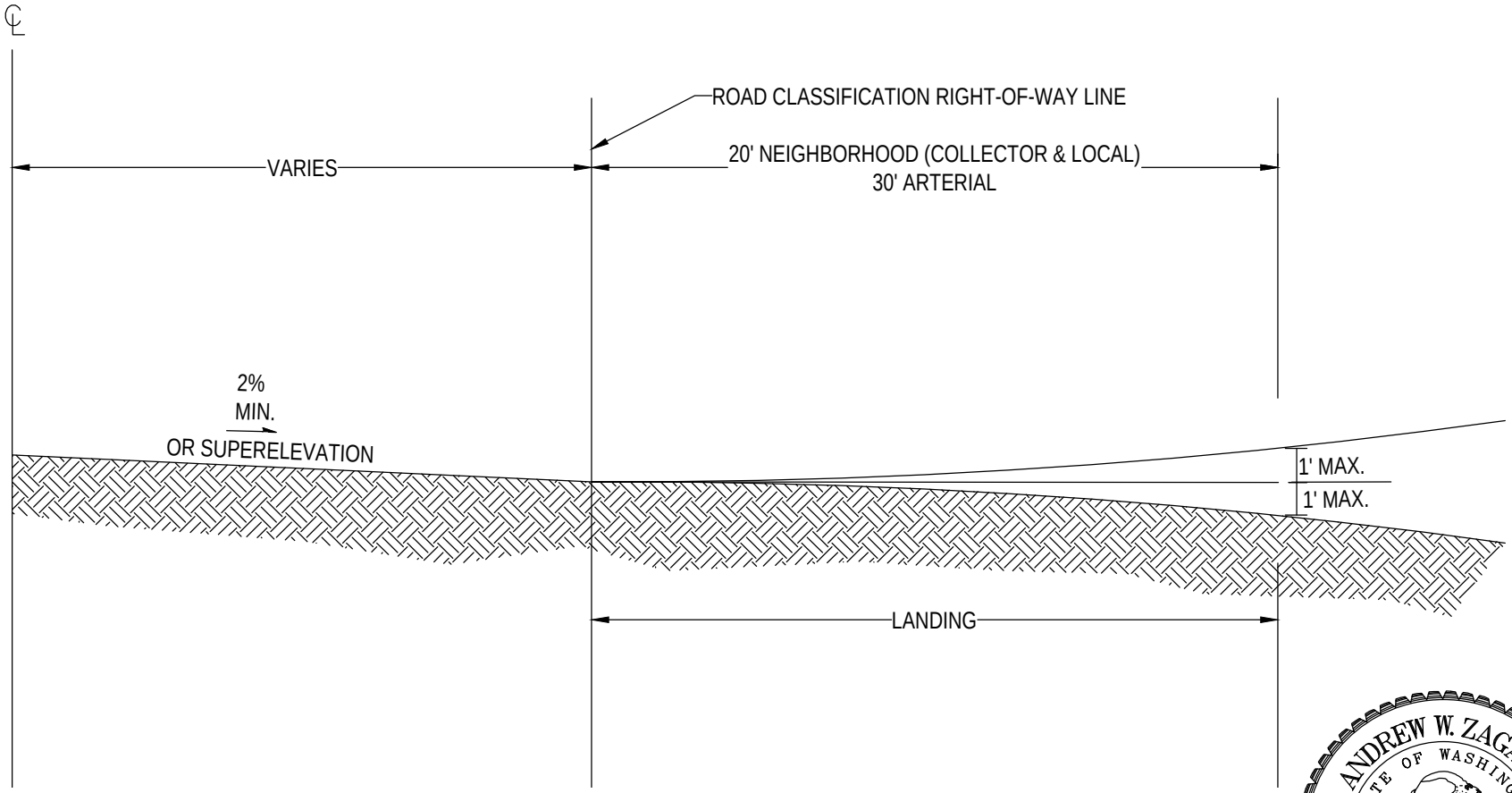

Preliminary

11/09/2016 1:38:07 PM

CITY OF SAMMAMISH
DEPARTMENT OF PUBLIC WORKS

INTERSECTION LANDING

APPROVED BY
CITY ENGINEER _____ DATE _____

REV	DWN	CKD	DATE	FILE
	TTC	AWZ	AUG-XX-2015	FIG02-01

REV. NO. X

A STREET WIDTH	B CURB RETURN RADIUS	C SET BACK DISTANCE	D CIRCLE DIAMETER	E OPENING WIDTH
20'	<15'	RECONSTRUCT CURBS		
	15'	5.5'	9'	16'+
	18'	5.0'	10'	17'+
	20'	4.5'	11'	18'-
	25'	4.0'	12'	19'+
24'	<12'	RECONSTRUCT CURBS		
	12'	5.5'	13'	16'+
	15'	5.0'	14'	17'-
	20'	4.5'	15'	18'+
	25'	3.5'	17'	20'-
25'	<12'	RECONSTRUCT CURBS		
	12'	5.5'	14'	16'+
	15'	5.0'	15'	17'-
	18'	4.5'	16'	18'-
	20'	4.5'	16'	18'+
	25'	3.5'	18'	20'-
30'	10'	5.5'	19'	16'+
	12'	5.0'	20'	17'-
	15'	5.0'	20'	17'+
	18'	4.5'	21'	18'+
	20'	4.0'	22'	19'+
	25'	3.0'	24'	20'
32'	10'	5.5'	21'	16'+
	12'	5.0'	22'	17'-
	15'	4.5'	23'	18'-
	18'	4.0'	24'	19'-
	20'	4.0'	24'	19'+
	25'	2.5'	27'	20'
36'	10'	5.0'	26'	17'-
	12'	5.0'	26'	17'+
	15'	4.5'	27'	18'+
	18'	4.0'	28'	19'+
	20'	3.5'	29'	20'-
	25'	1.5'	33'	20'
40'	10'	5.0'	30'	17'+
	12'	4.5'	31'	18'+
	15'	4.0'	32'	19'-
	18'	3.5'	33'	20'-
	20'	3.0'	34'	20'
	25'	1.0'	38'	20'

NOTE: "+" OR "-" DENOTES MINOR VARIATIONS

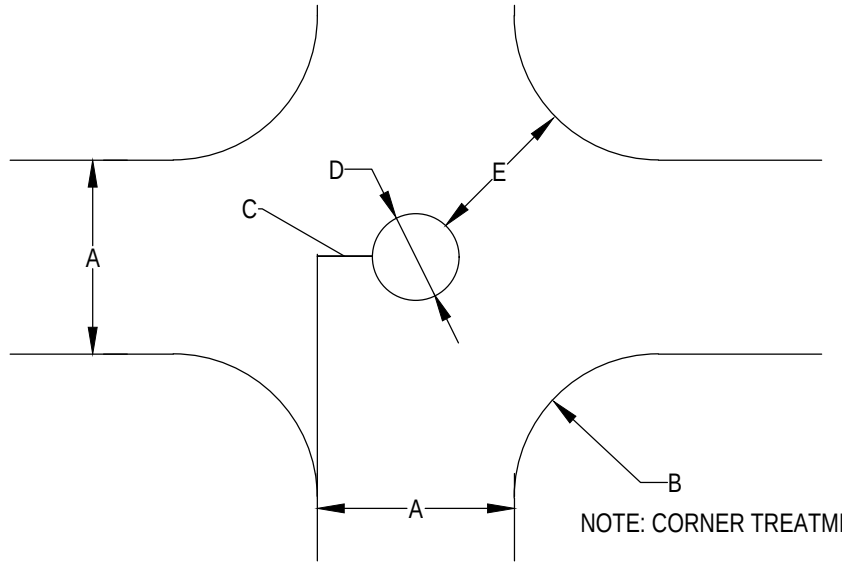

NOTE: CORNER TREATMENTS MAY BE REQUIRED.

INTERSECTION DIAGRAM

OPTIMUM CRITERIA

SET BACK DISTANCE	OPENING WIDTH
5.5' MAX	16' MIN.
5.0'	17' ±
4.5'	18' ±
4.0'	19' ±
3.5' OR LESS	20'

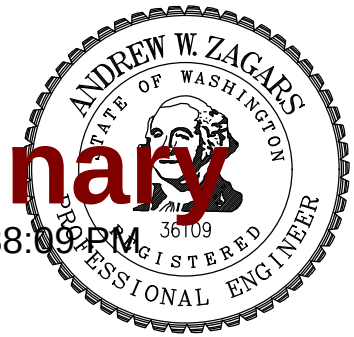

Preliminary

11/09/2016 1:38:09 PM

CITY OF SAMMAMISH
DEPARTMENT OF PUBLIC WORKS

TRAFFIC CIRCLE

APPROVED BY
CITY ENGINEER _____ DATE _____

REV	DWN	CKD	DATE	FILE
	TTC	AWZ	AUG-XX-2015	FIG02-02

REV. NO. X

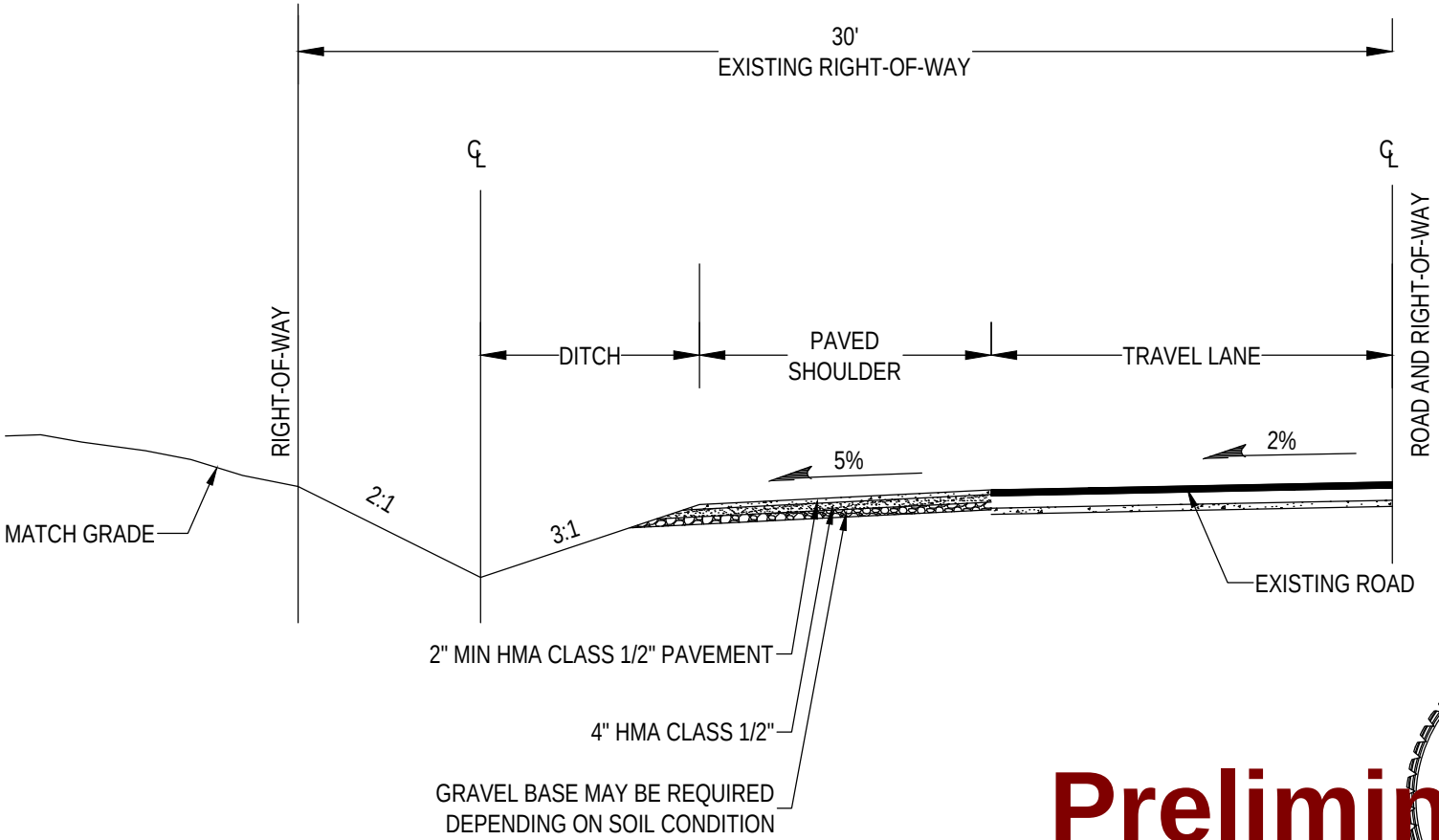

Preliminary

11/09/2016 1:38:12 PM

CITY OF SAMMAMISH
DEPARTMENT OF PUBLIC WORKS

SHOULDER TREATMENT

APPROVED BY
CITY ENGINEER _____ DATE _____

REV	DWN	CKD	DATE	FILE
	TTC	AWZ	AUG-XX-2015	FIG02-03

REV. NO. X

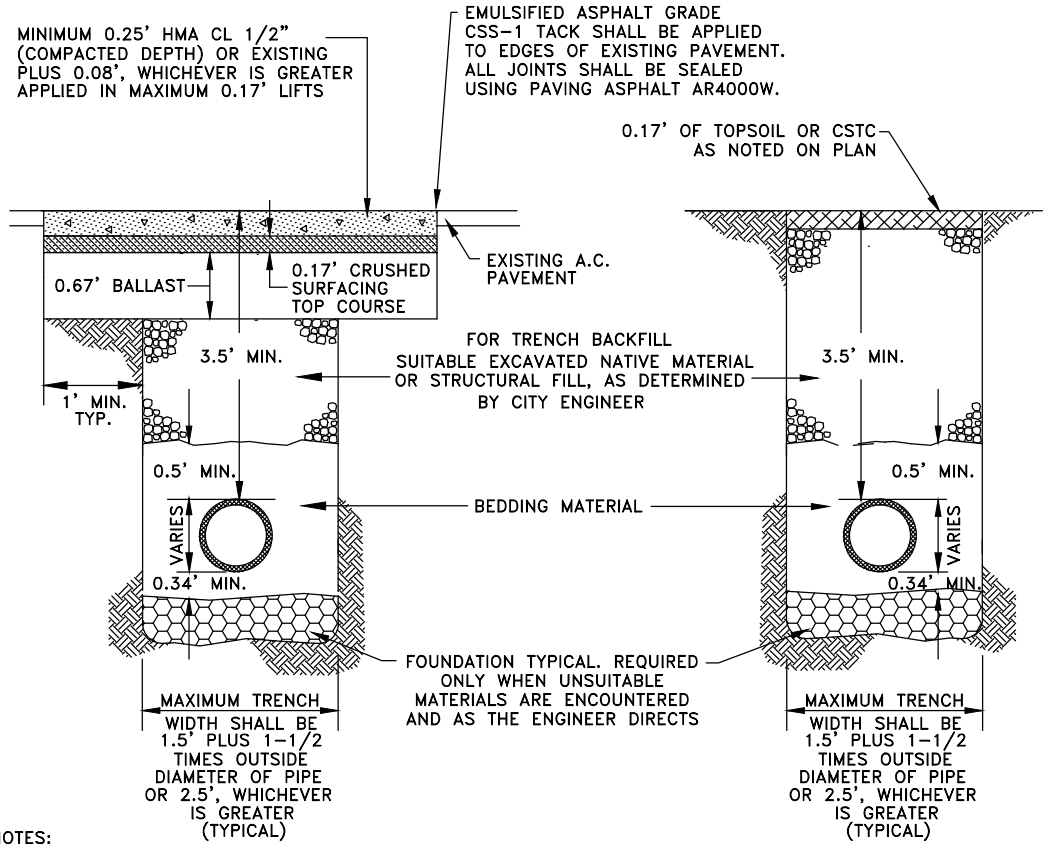

NOTES:

1. DIMENSIONS SHOWN ARE MINIMUM; GREATER THICKNESS MAY BE REQUIRED BY CITY ENGINEER.
2. ALL MATERIALS EXCEPT A.C.P. AND BEDDING MATERIAL SHALL BE COMPACTED IN 6-INCH MAXIMUM LIFTS TO 95% DENSITY.
3. BEDDING SHALL CONFORM TO SECTION 9-03.16 OF STANDARD SPECIFICATIONS.
4. COMPACTION: BEDDING SHALL BE COMPACTED TO 95% MAX. AS DETERMINED BY ASTM D1557. BACKFILL SHALL BE COMPACTED TO 85% IN UNPAVED AREA, AND 95% IN PAVED OR SHOULDER AREAS AS DETERMINED BY ASTM D1557.
5. ALL MATERIALS, WORKMANSHIP, AND INSTALLATION SHALL BE IN CONFORMANCE WITH THE LATEST VERSION OF WSDOT STANDARD SPECIFICATIONS FOR ROAD, BRIDGE AND MUNICIPAL CONSTRUCTION.
6. KEEP TRENCH BOTTOM COMPACTED WITH UNIFORM GRADE. A BELL JOINT SHALL BE REQUIRED AT EACH JOINT FOR PROPER SUPPORT. NO TEMPORARY SUPPORTS, I.E. BLOCKS, WILL BE ALLOWED TO SUPPORT PIPE. TRENCH BOTTOM SHALL BE TO GRADE PRIOR TO PIPE INSTALLATION.

Preliminary
11/09/2016 1:38:15 PM

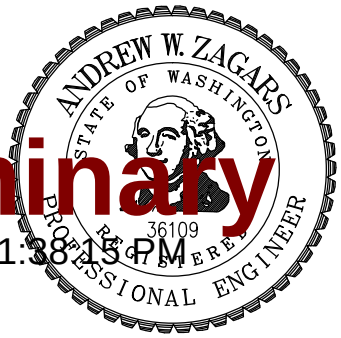

CITY OF SAMMAMISH
DEPARTMENT OF PUBLIC WORKS

TRENCH-PAVEMENT RESTORATION DETAIL

APPROVED BY
CITY ENGINEER _____ DATE _____

REV	DWN	CKD	DATE	FILE
	XXX	XXX	AUG-XX-2015	FIG02-05a

REV. NO. X

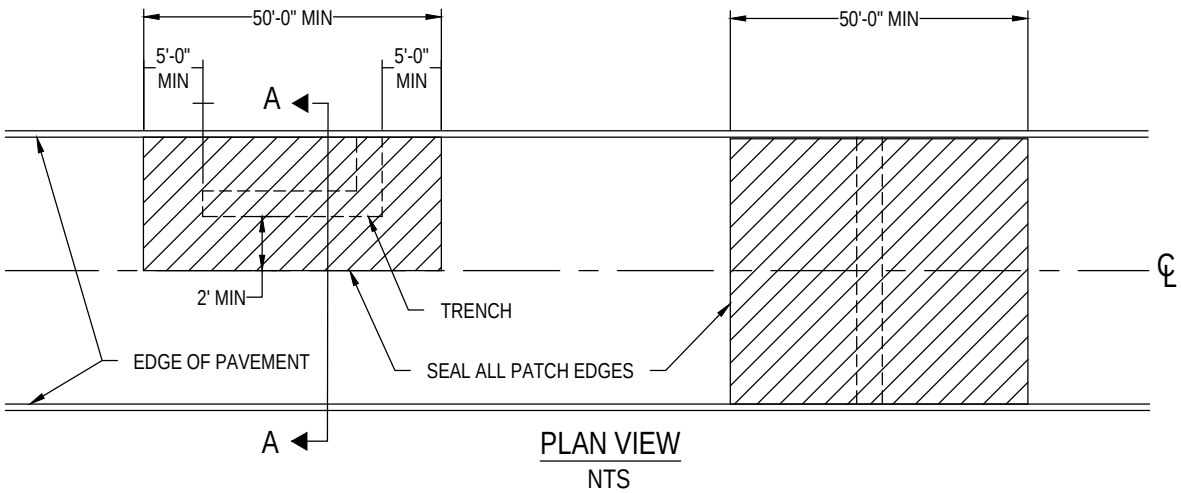

PLAN VIEW
NTS

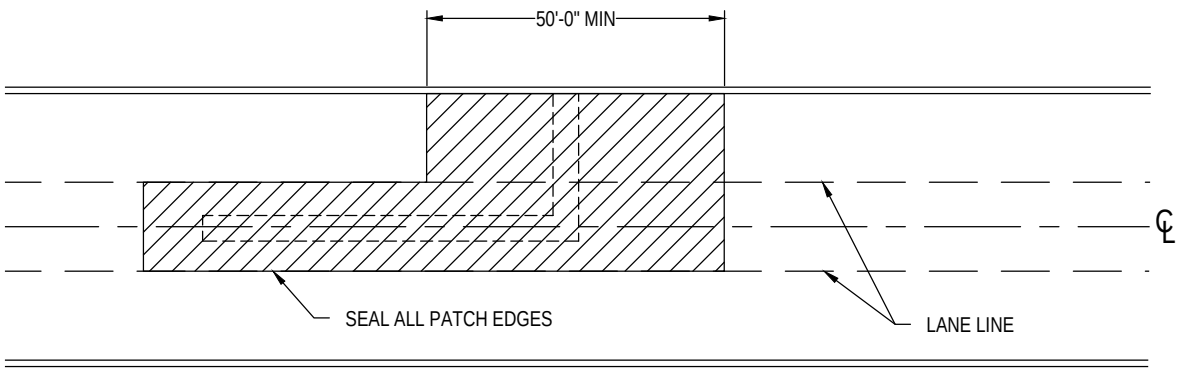

PLAN VIEW
NTS

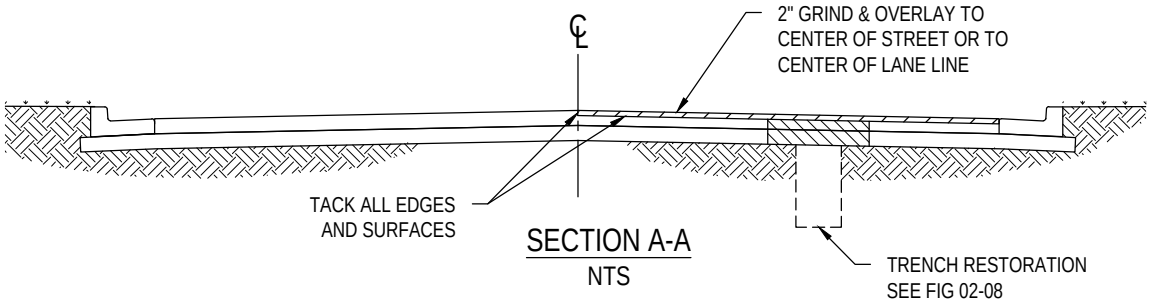

SECTION A-A
NTS

NOTES:

1. THIS DETAIL APPLIES TO ALL PAVEMENT CUTS.
2. DIMENSIONS SHOWN ARE MINIMUM. LIMITS MAY BE INCREASED TO MATCH NEARBY PAVING LIMITS OR OTHER PATCHES.
3. OVERLAY LIMITS MAY BE REDUCED BY CITY ON PAVEMENT IN FAIR CONDITION OR WORSE. SEE PAVEMENT CONDITION MAP FOR LOCATIONS.
4. REPAIR PAVEMENT PER WSDOT STANDARD SPECIFICATIONS SECTION 5-04.
5. HMA SHALL BE PLACED BY PAVERS MEETING THE REQUIREMENTS OF SECTION 5-04.3(3). ROLLERS SHALL MEET THE REQUIREMENTS OF SECTION 5-04.3(4)
6. LOWER ALL UTILITY CASTING PRIOR TO OVERLAY. ADJUST UTILITY CASTINGS TO FINISH GRADE AND RESTORE CHANNELIZATION AND LOOP DETECTORS.

Preliminary
11/09/2016 1:38:18 PM

CITY OF SAMMAMISH
DEPARTMENT OF PUBLIC WORKS

HMA PAVEMENT OVERLAY FOR TRENCH REPAIR

APPROVED BY
CITY ENGINEER _____ DATE _____

REV	DWN	CKD	DATE	FILE
	JG	XXX	AUG-XX-2015	FIG02-05b

REV. NO. X

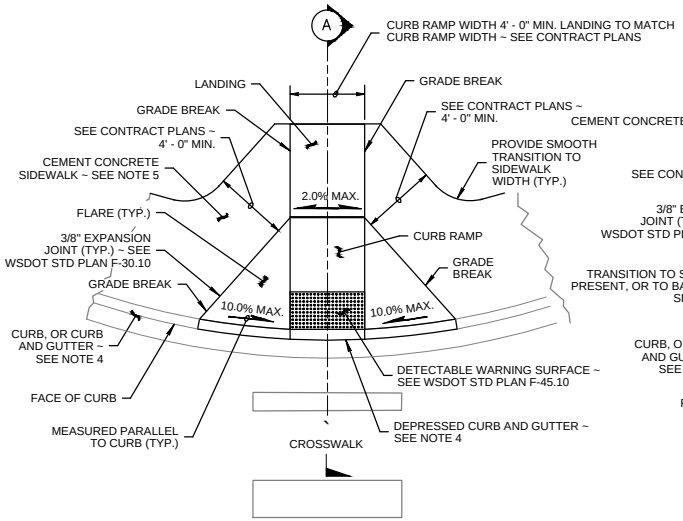

PLAN VIEW
TYPE PERPENDICULAR A

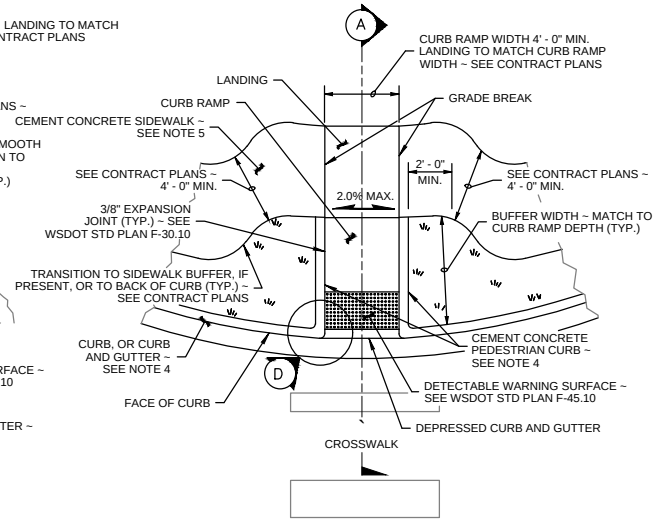

PLAN VIEW
TYPE PERPENDICULAR B
(SHOWN WITH BUFFER)

NOTES

1. Provide a separate Curb Ramp for each marked or unmarked crosswalk. Curb Ramp location shall be placed within the width of the associated crosswalk or as shown in the Contract Plans.
2. Where "GRADE BREAK" is called out, the entire length of the grade break between the two adjacent surface planes shall be flush.
3. Do not place Gratings, Junction Boxes, Access Covers, or other appurtenances in front of the Curb Ramp or on any part of the Curb Ramp or Landing.
4. See the Contract Plans for the curb design specified. See WSDOT STD Plan F-10.12 for Depressed Curb and Gutter, and Pedestrian Curb details.
5. See STD DWG 3-09 for Cement Concrete Sidewalk details. See Contract Plans for width and placement of sidewalk.
6. The Bid Item "Cement Concrete Curb Ramp Type __" does not include the adjacent Curb, Curb and Gutter, Depressed Curb and Gutter, Pedestrian Curb, or Sidewalk.
7. The Curb Ramp maximum running slope shall not require the ramp length to exceed 15-feet to avoid chasing the slope indefinitely when connecting to steep grades. When applying the 15-foot maximum length, the running slope of the Curb Ramp shall as flat as feasible.
8. Curb Ramp, Landing, and Flares shall receive broom finish. See WSDOT STD Specifications 8-14.

LEGEND

SLOPE IN EITHER DIRECTION

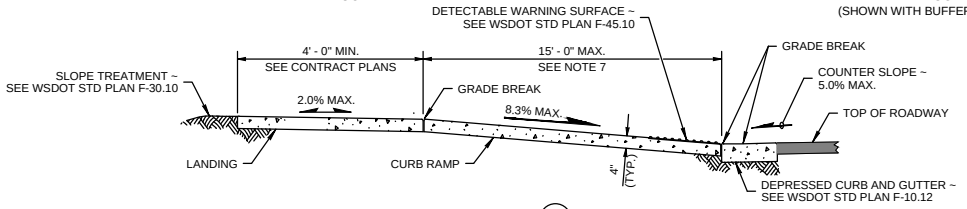

SECTION A

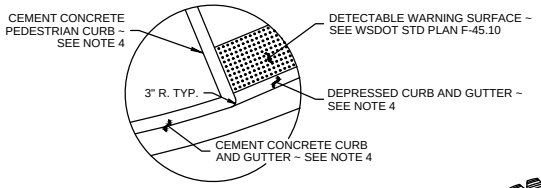

CURB RADIUS DETAIL D

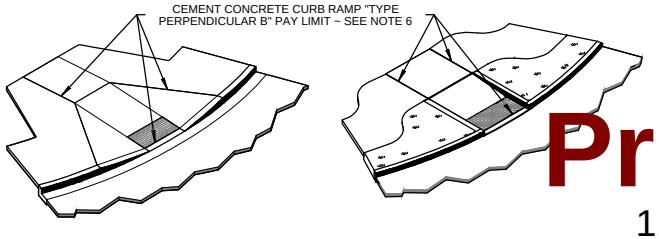

ISOMETRIC VIEW
TYPE PERPENDICULAR A PAY LIMIT

ISOMETRIC VIEW
TYPE PERPENDICULAR B PAY LIMIT

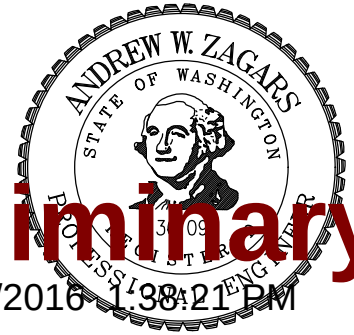

Preliminary
11/09/2016 1:38:21 PM

CITY OF SAMMAMISH
DEPARTMENT OF PUBLIC WORKS

PERPENDICULAR CURB RAMP

APPROVED BY
CITY ENGINEER _____ DATE _____

REV	DWN	CKD	DATE	FILE
	XXX	XXX	AUG-XX-2015	FIG02-06

REV. NO. X

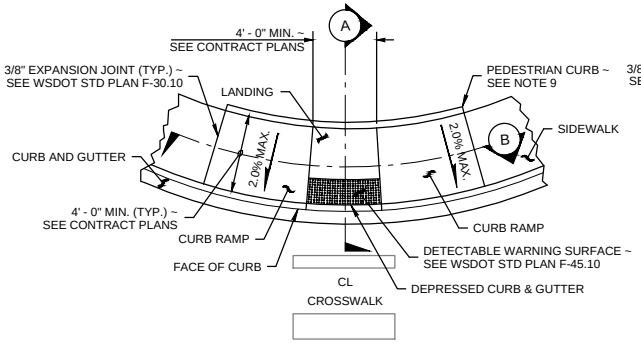

PLAN VIEW
TYPE PARALLEL A

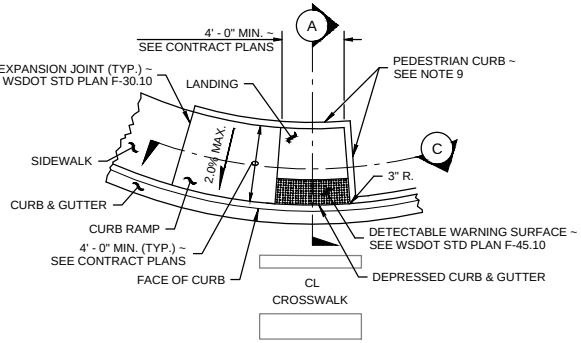

PLAN VIEW
TYPE PARALLEL B

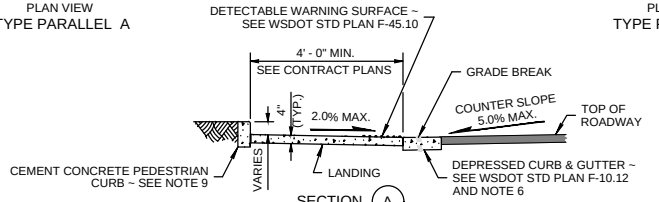

SECTION A

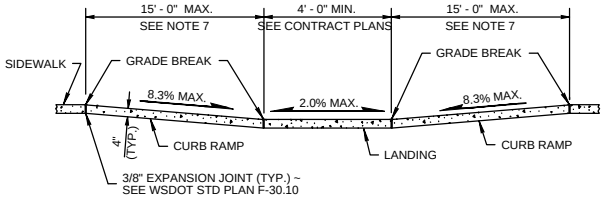

SECTION B

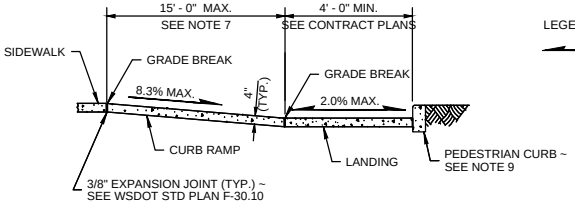

SECTION C

LEGEND

SLOPE IN EITHER DIRECTION

NOTES

1. Provide a separate Curb Ramp for each marked or unmarked crosswalk. Curb Ramp location shall be placed within the width of the associated crosswalk, or as shown in the Contract Plans.
2. Where "GRADE BREAK" is called out, the entire length of the grade break between the two adjacent surface planes shall be flush.
3. Do not place Gratings, Junction Boxes, Access Covers, or other appurtenances in front of the Curb Ramp or on any part of the Curb Ramp or Landing.
4. See Contract Plans for the curb design specified. See WSDOT STD Plan F-10.12 for Depressed Curb and Gutter, and Pedestrian Curb details.
5. See STD DWG 3-09 for Cement Concrete Sidewalk Details. See Contract Plans for width and placement of sidewalk.
6. The Bid Item "Cement Concrete Curb Ramp Type __" does not include the adjacent Curb, Curb and Gutter, Depressed Curb and Gutter, Pedestrian Curb, or Sidewalks.
7. The Curb Ramp maximum running slope shall not require the ramp length to exceed 15 feet to avoid chasing the slope indefinitely when connecting to steep grades. When applying the 15-foot max. length, the running slope of the curb ramp shall be as flat as feasible.
8. Curb Ramp, Landing, and Flares shall receive broom finish. See WSDOT STD Specifications 8-14.
9. Pedestrian Curb may be omitted if the ground surface at the back of the Curb Ramp and/or Landing will be at the same elevation as the Curb Ramp or Landing and there will be no material to retain.

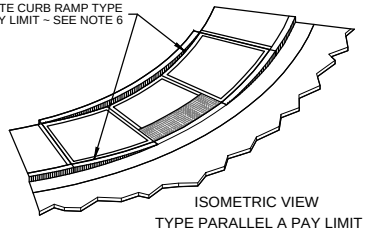

ISOMETRIC VIEW
TYPE PARALLEL A PAY LIMIT

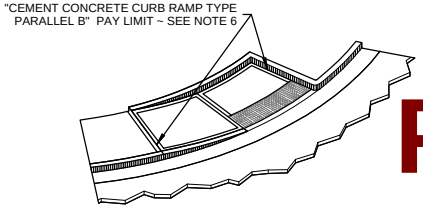

ISOMETRIC VIEW
TYPE PARALLEL B PAY LIMIT

Preliminary

11/09/2016 1:38:25 PM

CITY OF SAMMAMISH
DEPARTMENT OF PUBLIC WORKS

PARALLEL CURB RAMP

APPROVED BY
CITY ENGINEER _____ DATE _____

REV	DWN	CKD	DATE	FILE
	XXX	XXX	AUG-XX-2015	FIG02-07

REV. NO. X

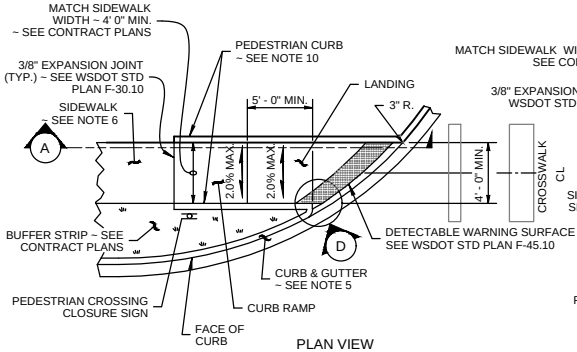

PLAN VIEW
TYPE SINGLE DIRECTION A

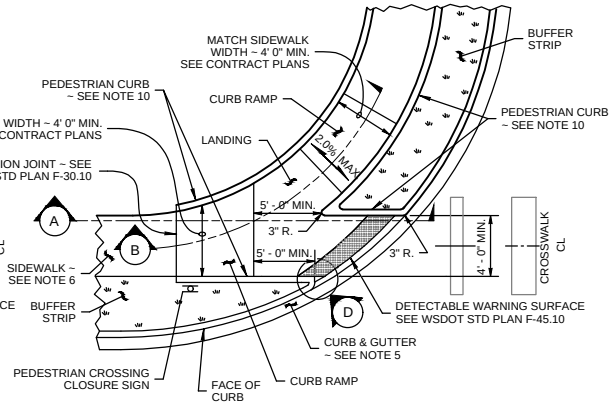

PLAN VIEW
TYPE SINGLE DIRECTION B

NOTES

1. This plan is to be used where pedestrian crossing in one direction is not permitted.
2. Curb ramp location shall be placed within the width of the associated crosswalk, or as shown in the Contract Plans.
3. Where "GRADE BREAK" is called out, the entire length of the grade break between the two adjacent surface planes shall be flush.
4. Do not place gratings, junction boxes, access covers or other appurtances in front of the curb ramp or on any part of the curb ramp or landing.
5. See the Contract Documents for the curb design specified. See WSDOT STD Plan F-10.12 for Depressed Curb and Gutter and Pedestrian Curb details.
6. See STD DWG 3-09 for Cement Concrete Sidewalk Details. See contract plans for width and placement of sidewalk.
7. The bid item "Cement Concrete Curb Ramp Type __" does not include the adjacent Curb or (Curb and Gutter), Depressed Curb and Gutter, Pedestrian Curb or Sidewalk, or the pedestrian crossing closure sign.
8. The curb ramp maximum running slope shall not require the ramp length to exceed 15 feet to avoid chasing the slope indefinitely when connecting to steep grades. When applying the 15 foot maximum length, the running slope of the curb ramp shall be as flat as feasible.
9. Curb ramps and landings shall receive broom finish. See WSDOT STD Specifications 8-14.
10. Pedestrian Curb may be omitted if the ground surface at the back of the Curb Ramp and/or landing will be at the same elevation as the Curb Ramp or Landing and there will be no material to retain.

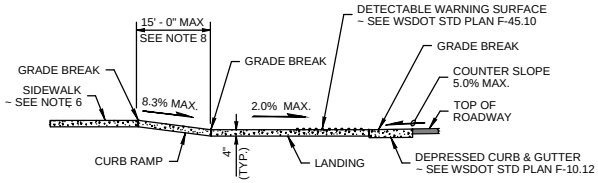

SECTION A

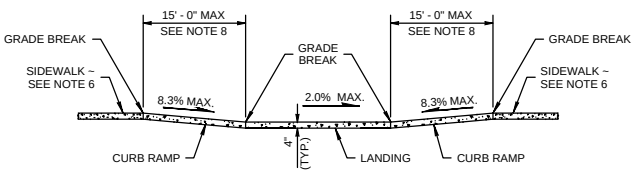

SECTION B

LEGEND

SLOPE IN EITHER DIRECTION

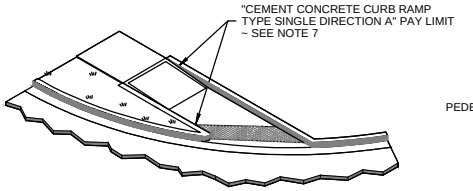

ISOMETRIC VIEW
TYPE SINGLE DIRECTION A
PAY LIMIT

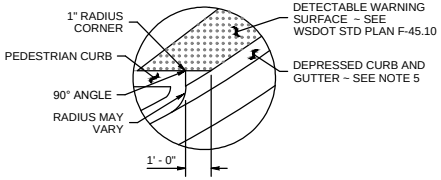

DETAIL D

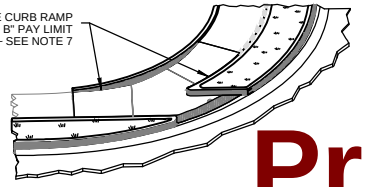

ISOMETRIC VIEW
TYPE SINGLE DIRECTION B
PAY LIMIT

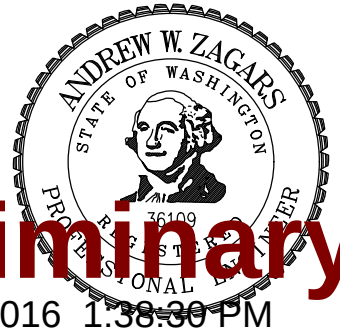

Preliminary

11/09/2016 1:38:30 PM

CITY OF SAMMAMISH
DEPARTMENT OF PUBLIC WORKS

SINGLE DIRECTION CURB RAMP

APPROVED BY
CITY ENGINEER _____ DATE _____

REV	DWN	CKD	DATE	FILE
	XXX	XXX	AUG-XX-2015	FIG02-08

REV. NO. X

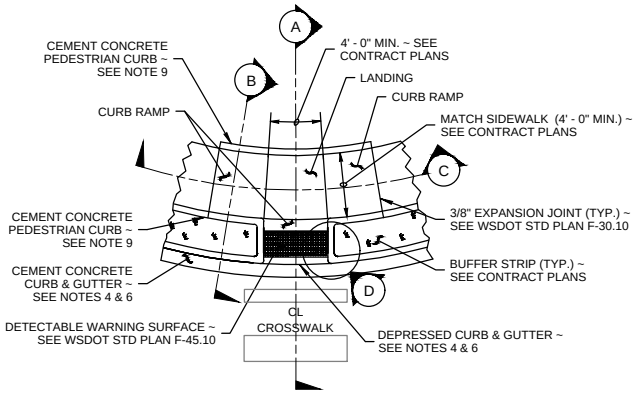

PLAN VIEW
TYPE COMBINATION
WITH BUFFER

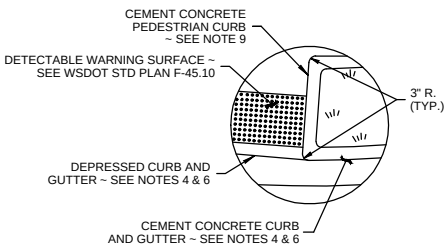

DETAIL D

CURB RADIUS DETAIL

NOTES

1. Provide a separate Curb Ramp for each marked or unmarked crosswalk. Curb Ramp location shall be placed within the width of the associated crosswalk or as shown in the Contract Plans.
2. Where "GRADE BREAK" is called out, the entire length of the grade break between the two adjacent surface planes shall be flush.
3. Do not place Gratings, Junction Boxes, Access Covers, or other appurtenances in front of the Curb Ramp or on any part of the Curb Ramp or Landing.
4. See Contract Plans for the curb design specified. See WSDOT STD Plan F-10.12 for Depressed Curb, Gutter and Pedestrian Curb details.
5. See STD DWG 3-09 for Cement Concrete Sidewalk Details. See Contract Plans for width and placement of sidewalk.
6. The Bid Item "Cement Concrete Curb Ramp Type __" does not include the adjacent Curb, Curb and Gutter, Depressed Curb and Gutter, Pedestrian Curb, or Sidewalks.
7. The Curb Ramp maximum running slope shall not require the ramp length to exceed 15 feet to avoid chasing the slope indefinitely when connecting to steep grades. When applying the 15-foot max. length, the running slope of the Curb Ramp shall be as flat as feasible.
8. Curb Ramp, Landing and Flares shall receive broom finish. See WSDOT STD Specifications 8-14.
9. Pedestrian Curb may be omitted if the ground surface at the back of the Curb Ramp and/or Landing will be at the same elevation as the Curb Ramp or Landing and there will not be material to retain.

LEGEND

SLOPE IN EITHER DIRECTION

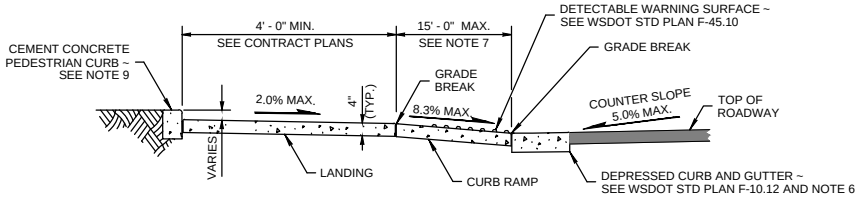

SECTION A

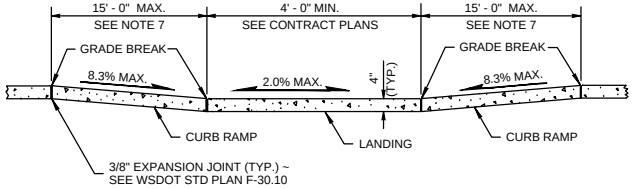

SECTION C

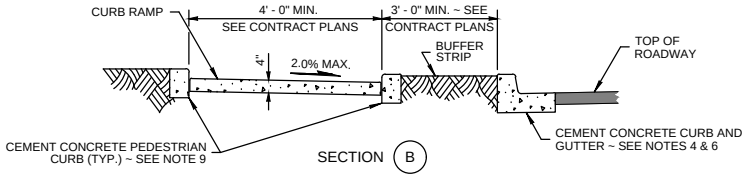

SECTION B

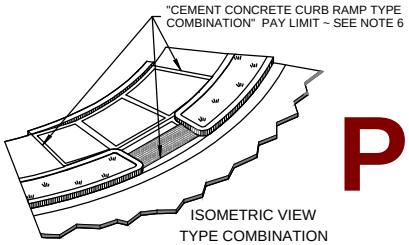

ISOMETRIC VIEW
TYPE COMBINATION
PAY LIMIT

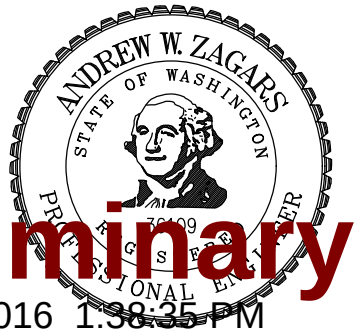

Preliminary

11/09/2016 1:38:35 PM

CITY OF SAMMAMISH
DEPARTMENT OF PUBLIC WORKS

COMBINATION CURB RAMP

APPROVED BY
CITY ENGINEER _____ DATE _____

REV	DWN	CKD	DATE	FILE
	XXX	XXX	AUG-XX-2015	FIG02-09

REV. NO. X

NOTES:

THE CASTINGS SHALL BE GRAY-IRON CASTINGS, ASTM DESIGNATION A 48, CLASS 40. THE COVER AND SEAT SHALL BE MACHINED SO AS TO HAVE PERFECT CONTACT AROUND THE ENTIRE CIRCUMFERENCE AND FULL WIDTH OF BEARING SURFACE.

WHEN THE MONUMENT CASE AND COVER ARE PLACED IN CEMENT CONCRETE PAVEMENT THE CONCRETE BASE WILL BE NECESSARY.

APPROXIMATE WEIGHTS:

CASE	60 LBS.
COVER	19 LBS.
TOTAL	79 LBS.

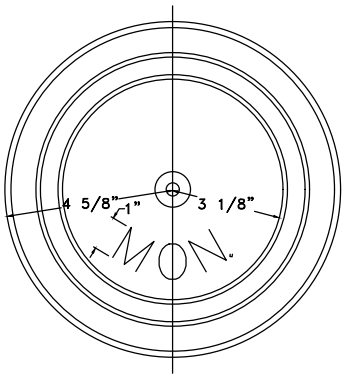

PLAN OF COVER

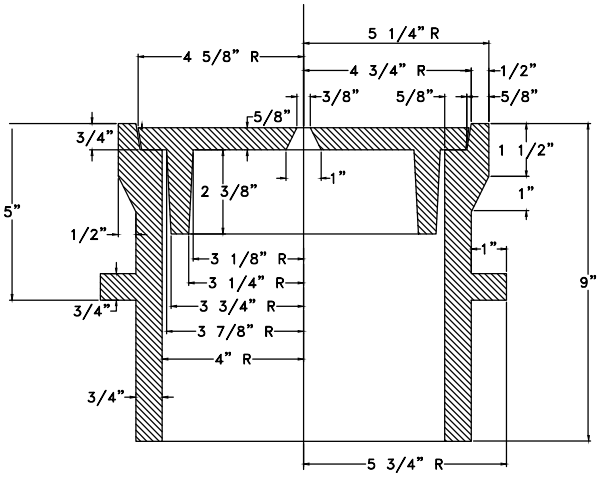

SECTION

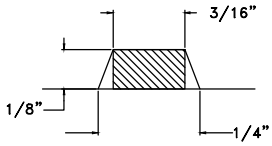

SECTION OF LETTER

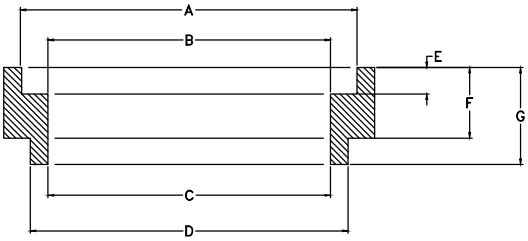

SECTION A-A

PLAN

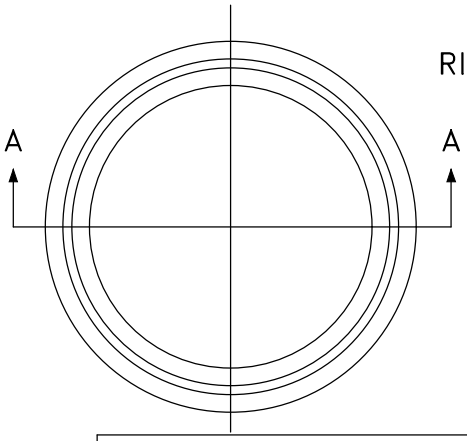

RISER RING

SIZE			
DIM	1-1/2"	2"	3"
A	10-1/2"	10-1/2"	10-1/2"
B	9-1/2"	9-1/2"	9-1/2"
C	8"	8"	8"
D	9"	9"	9"
E	3/4"	3/4"	3/4"
F	1-1/2"	2"	3"
G	2-1/4"	2-3/4"	3-3/4"

Preliminary
11/09/2016 1:38:41 PM

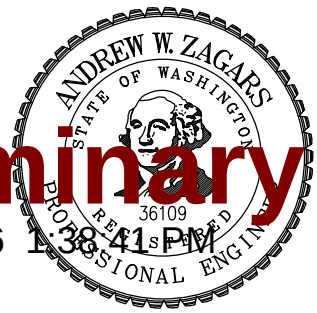

CITY OF SAMMAMISH
DEPARTMENT OF PUBLIC WORKS

MONUMENT CASE AND COVER WITH RISER

APPROVED BY
CITY ENGINEER _____ DATE _____

REV	DWN	CKD	DATE	FILE
	XXX	XXX	AUG-XX-2015	FIG02-11a

REV. NO. X

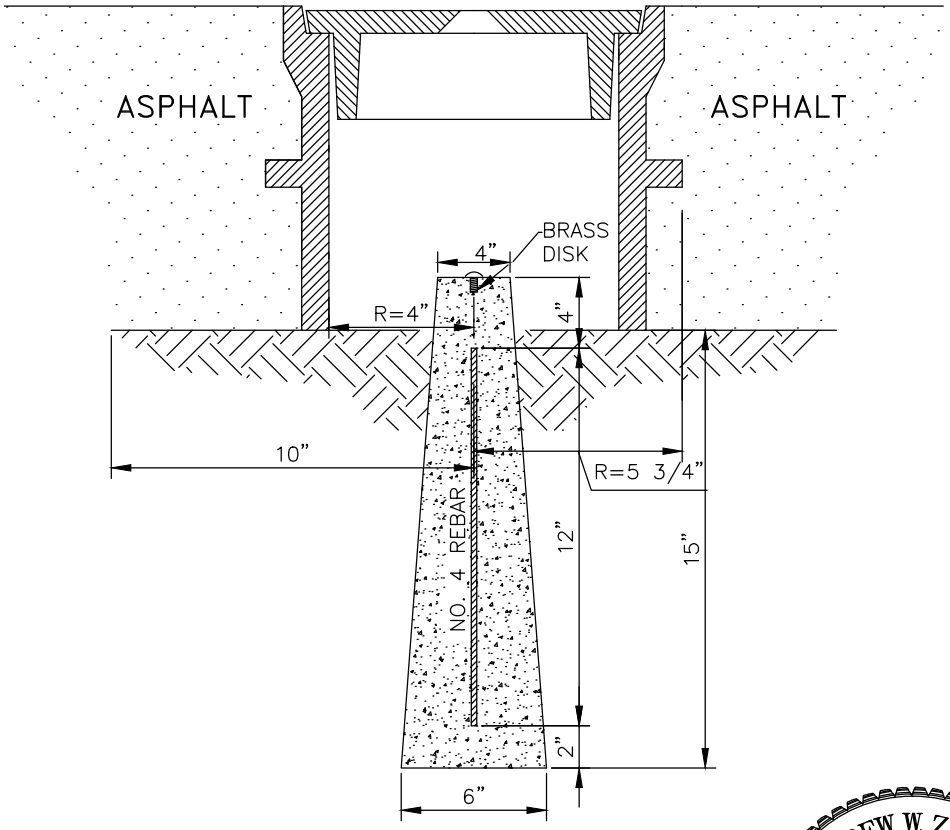

SECTION

NOTES

1. ASPHALT SHOULD BE PLACED IN LIFTS NO LARGER THAN 4”.
2. MINIMUM ULTIMATE COMPRESSIVE STRENGTH OF CONCRETE CASTING AT 28 DAYS – 3000#.

Preliminary
11/09/2016 1:38:44 PM

ANDREW W. ZAGARS
STATE OF WASHINGTON
REGISTERED
PROFESSIONAL ENGINEER

CITY OF SAMMAMISH
DEPARTMENT OF PUBLIC WORKS

MONUMENT CASE AND COVER

APPROVED BY
CITY ENGINEER _____ DATE _____

REV	DWN	CKD	DATE	FILE
	XXX	XXX	AUG-XX-2015	FIG02-11b

REV. NO. X

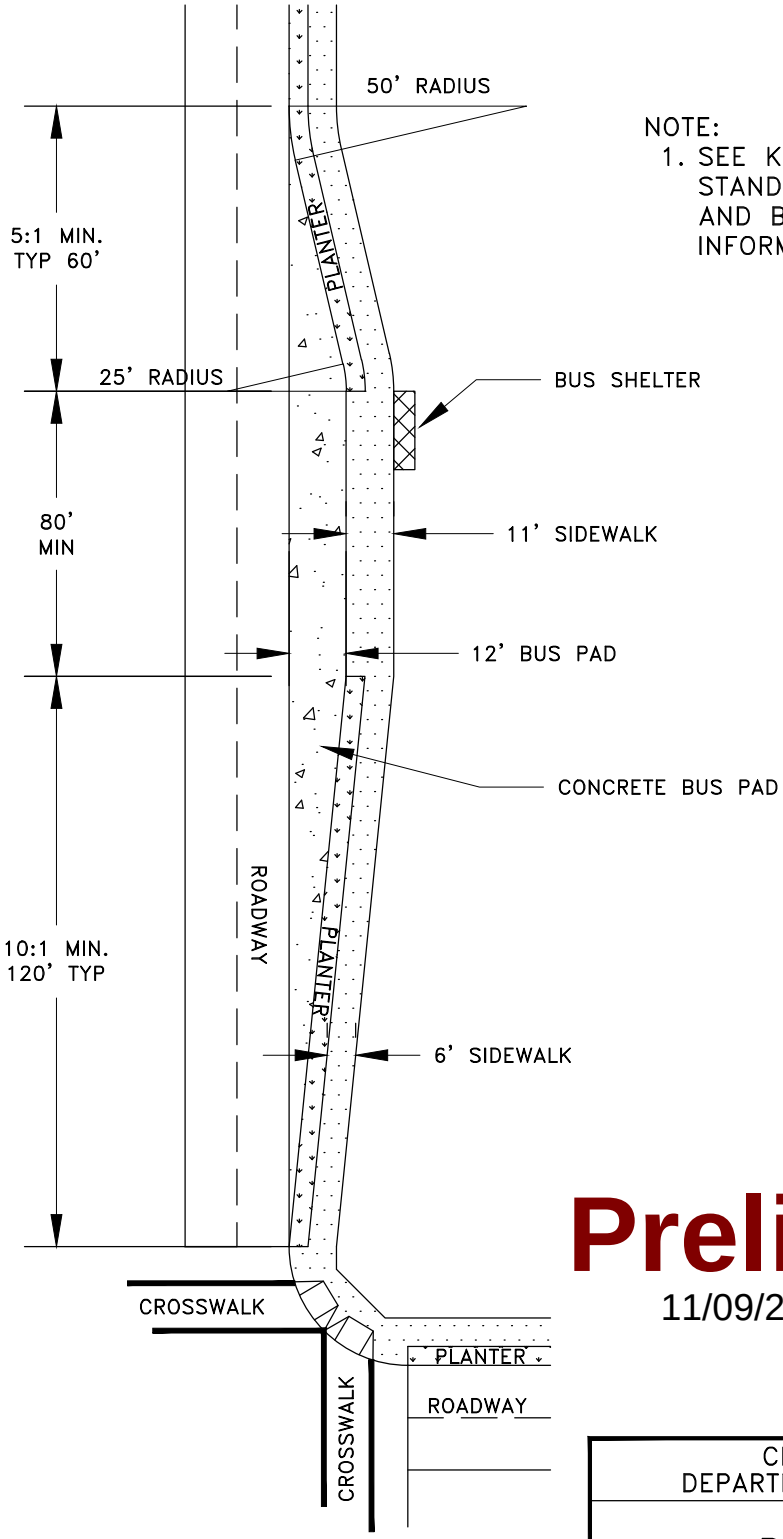

NOTE:
1. SEE KING COUNTY METRO STANDARDS FOR BUS PAD AND BUS SHELTER INFORMATION

Preliminary

11/09/2016 1:38:47 PM

CITY OF SAMMAMISH
DEPARTMENT OF PUBLIC WORKS

BUS TURNOUT

APPROVED BY
CITY ENGINEER _____ DATE _____

REV	DWN	CKD	DATE	FILE
	XXX	XXX	AUG-XX-2015	FIG02-14

REV. NO. X

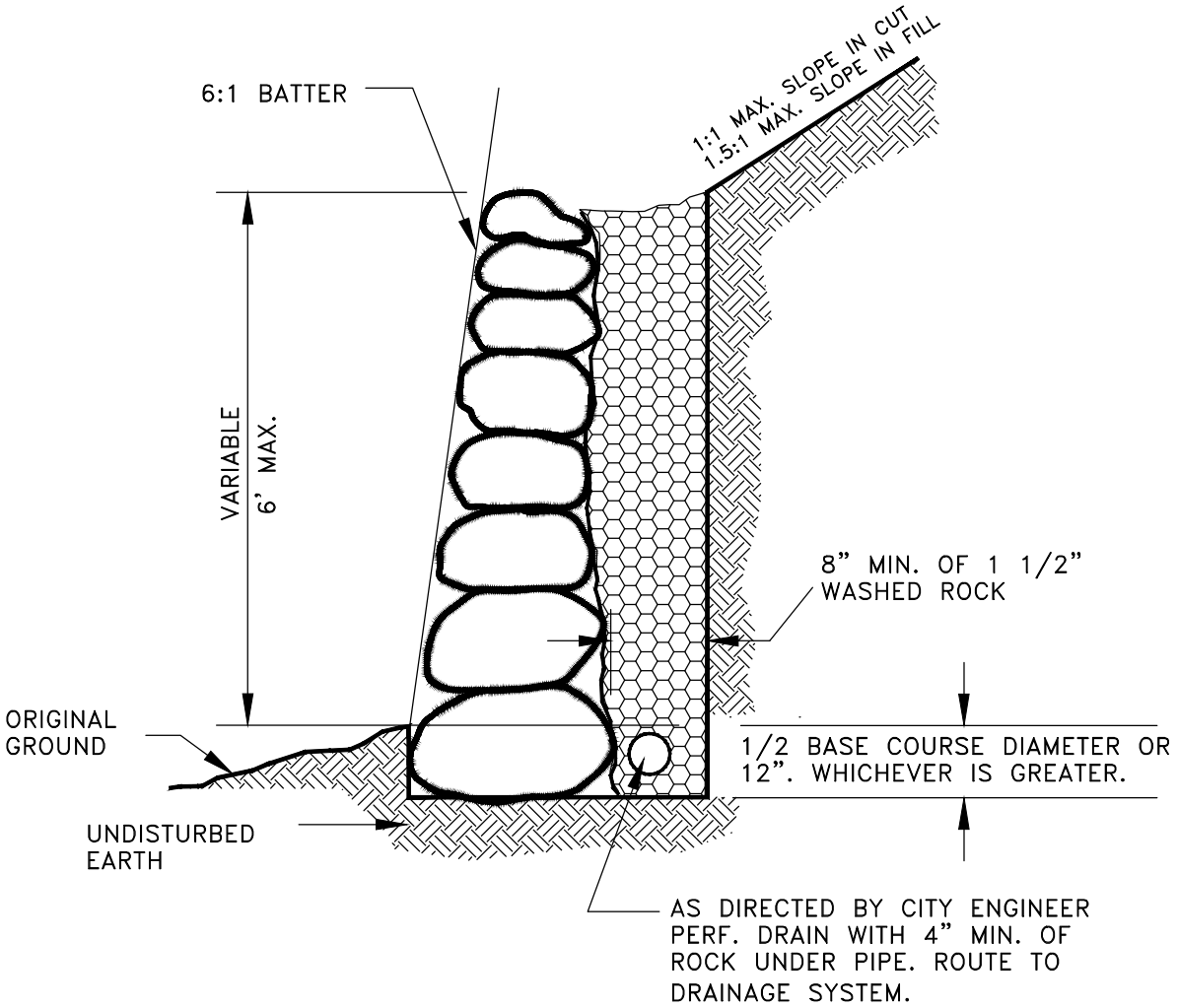

GENERAL NOTES:

1. Rockeries higher than 5' shall be constructed of rocks of graduated sizes from 5-man to 2-man from bottom to top. Rockeries of 5' or lower shall be constructed of 3-man to 2-man from bottom to top. Rock size catagories shall include:

   Two-man rocks (300 to 600 pounds), 13 inches in least dimension;

   Three-man rocks (800 to 1200 pounds), 16 inches in least dimension;

   Four-man rocks (1500 to 2200 pounds), 18 inches in least dimension;

   Five-man rocks (2400 to 3400 pounds), 24 inches in least dimension.
2. The rockery shall be installed with a smooth face.
3. The long dimension of the rocks shall extend into the earth to provide maximum stability.
4. The rock shall be placed so as to lock into two rocks in the lower tier.
5. Call for inspection prior to base course being placed (for verification of rockery height, foundation material and rock size).
6. Design varying from those indicated shall carry the seal of a civil or geotechnical engineer experienced in soil mechanics.

Preliminary
11/09/2016 1:38:49 PM

ANDREW W. ZAGARS
STATE OF WASHINGTON
36109
REGISTERED
PROFESSIONAL ENGINEER

CITY OF SAMMAMISH
DEPARTMENT OF PUBLIC WORKS

ROCK RETAINING WALL

APPROVED BY
CITY ENGINEER _____ DATE _____

REV	DWN	CKD	DATE	FILE
	XXX	XXX	AUG-XX-2015	FIG02-15

REV. NO. X

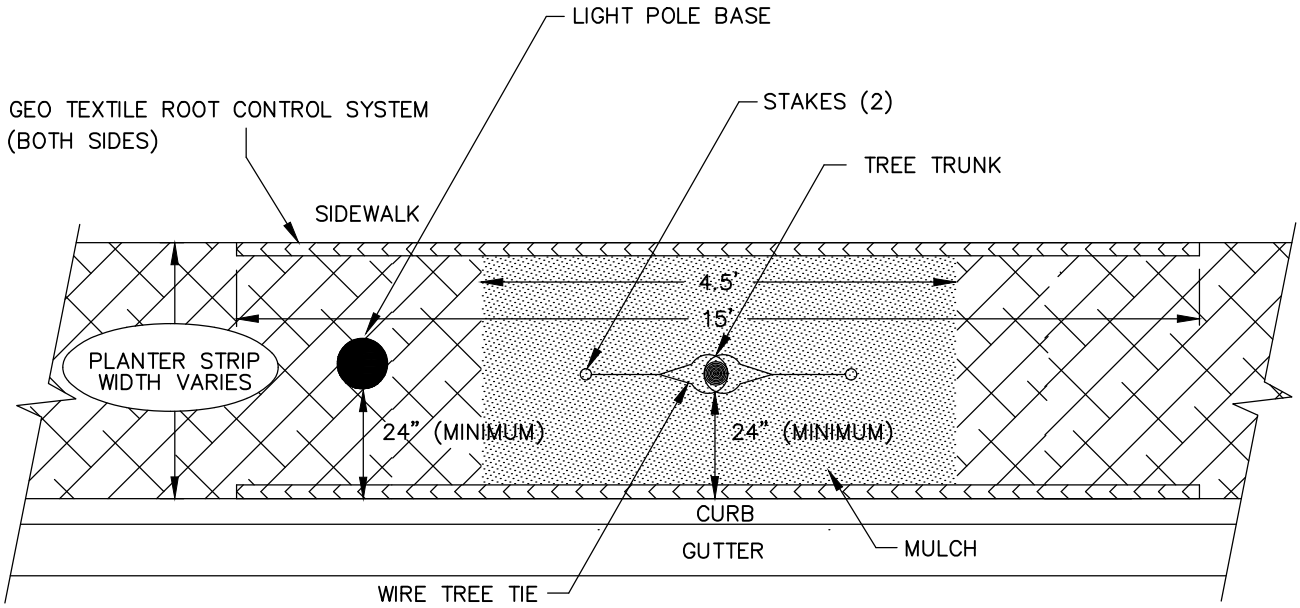

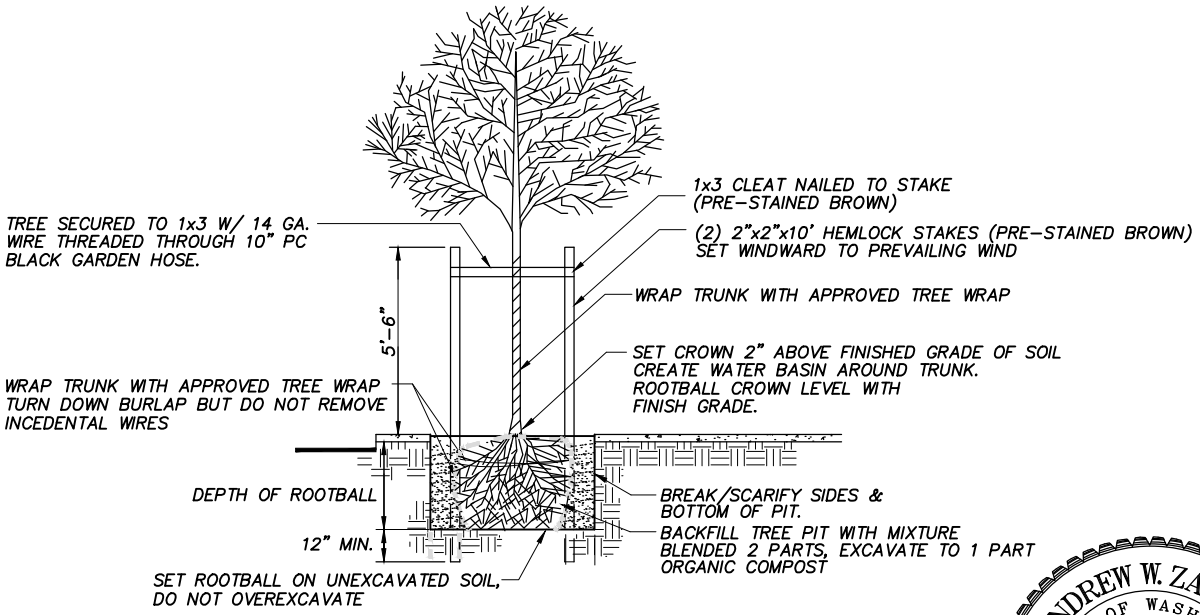

STREET TREE SECTION
N.T.S.

Preliminary
11/09/2016 1:38:54 PM

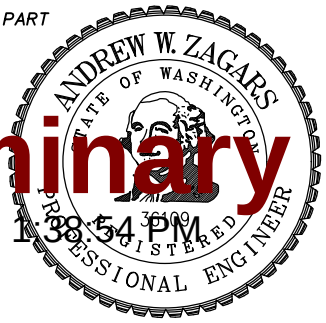

TOPSOILING NOTES

1.) ALL PLANT BEDS TO RECIEVE A UNIFORM LAYER OF PREPARED PLANTING MIX. 4" DEEP AND ROTOTILLED INTO SUBSOIL TO A DEPTH OF 8". PLANTING MIX TO BE EQUAL PARTS SANDYLOAM, PEAT HUMUS AND ORGANIC COMPOST

2.) BACKFILL FOR TREE PITS SHALL BE A UNIFORM BLENDED MIXTURE OF 2 PARTS EXCAVATE AND 1 PART ORGANIC COMPOST.

3.) ORGANIC COMPOST SHALL BE STEERCO, GRO-CO, CEDAR GROW COMPOST, NUTRI MULCH OR OTHER EQUAL POST CONSUMER RECYCLED HORTICULTURAL COMPOST PRODUCTS.

CITY OF SAMMAMISH
DEPARTMENT OF PUBLIC WORKS

PLANTER STRIP
DETAIL

APPROVED BY
CITY ENGINEER _____ DATE _____

REV	DWN	CKD	DATE	FILE
			AUG-XX-2015	FIG02-18

REV. NO. X

STOP CONTROLLED INTERSECTIONS

EXAMPLE: MAJOR STREET SPEED LIMIT = 20 M.P.H.

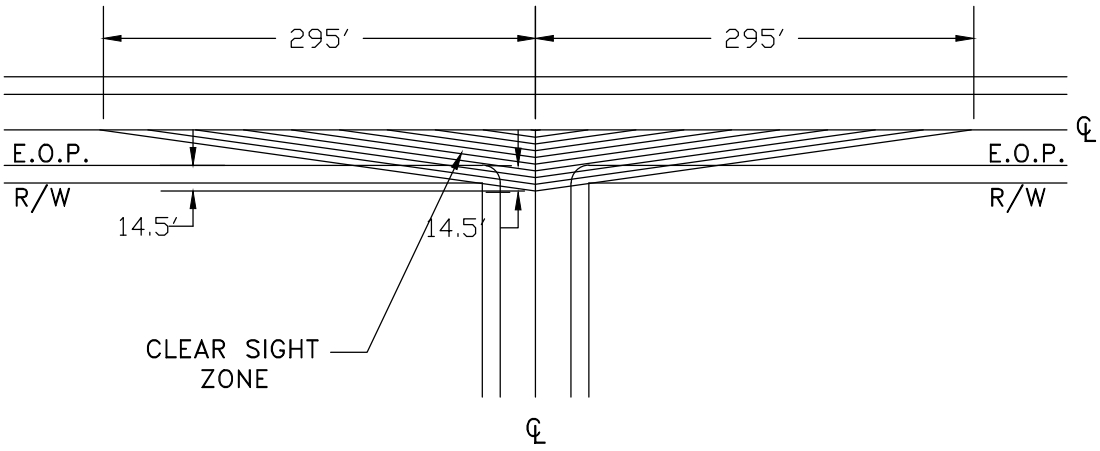

SIGHT DISTANCE (FT.)		
	(A.)	(B.)
SPEED LIMIT	ARTERIAL STREET	LOCAL STREET
20 MPH	295	295
25 MPH	355	355
30 MPH	415	415
35 MPH	470	470
40 MPH	530	530
50 MPH	590	590

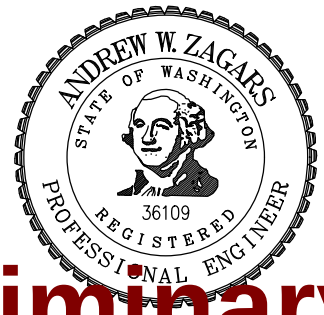

Preliminary

11/09/2016 1:38:57 PM

GENERAL NOTES:

1. CRITERIA FOR SIGHT DISTANCES ARE BASED ON THE CURRENT AASHTO STANDARDS.

CITY OF SAMMAMISH
DEPARTMENT OF PUBLIC WORKS

SIGHT OBSTRUCTION

APPROVED BY
CITY ENGINEER _____ DATE _____

REV	DWN	CKD	DATE	FILE
	XXX	XXX	AUG-XX-2015	FIG02-19A

REV. NO. X

UNCONTROLLED INTERSECTIONS

EXAMPLE: MAJOR STREET SPEED LIMIT = 30 M.P.H.
MINOR STREET SPEED LIMIT = 25 M.P.H.

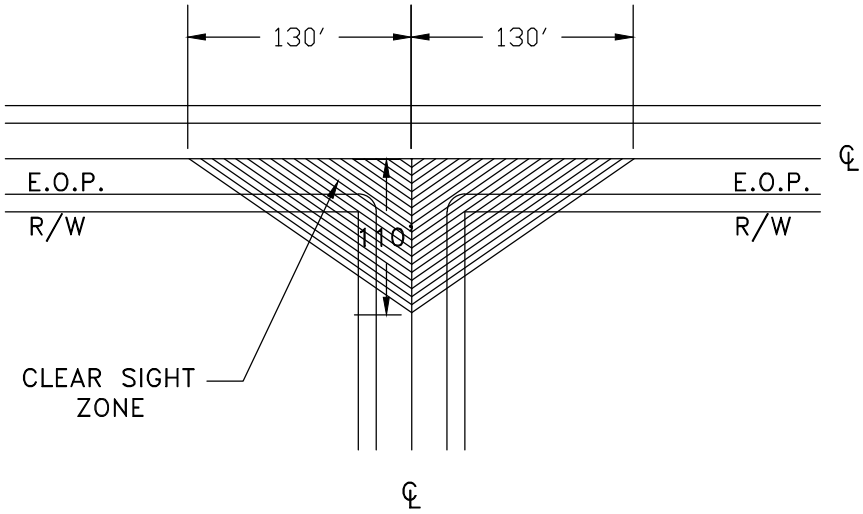

SIGHT DISTANCE (FT.)		
	(A.)	(B.)
SPEED LIMIT	ARTERIAL STREET	LOCAL STREET
20 MPH	90	90
25 MPH	110	110
30 MPH	130	130
35 MPH	155	155
40 MPH	180	180

Preliminary

11/09/2016 1:39:05 PM

GENERAL NOTES:

1. CRITERIA FOR SIGHT DISTANCES ARE BASED ON THE CURRENT AASHTO STANDARDS.

CITY OF SAMMAMISH
DEPARTMENT OF PUBLIC WORKS

SIGHT OBSTRUCTION

APPROVED BY
CITY ENGINEER _____ DATE _____

REV	DWN	CKD	DATE	FILE
	XXX	XXX	AUG-XX-2015	FIG02-19B

REV. NO. X

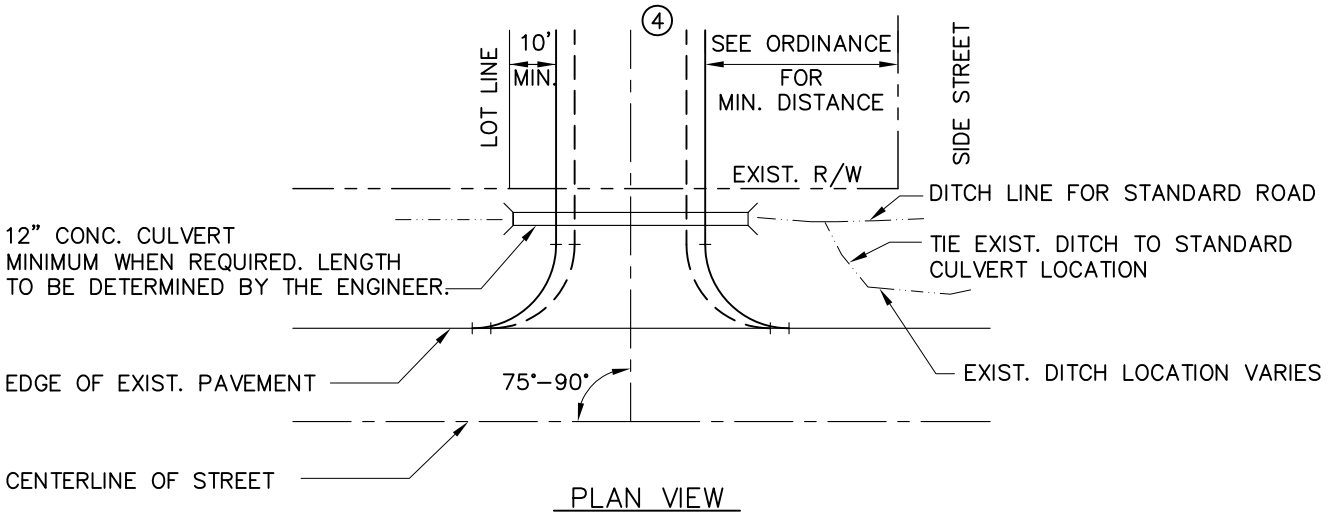

PLAN VIEW

N.T.S.

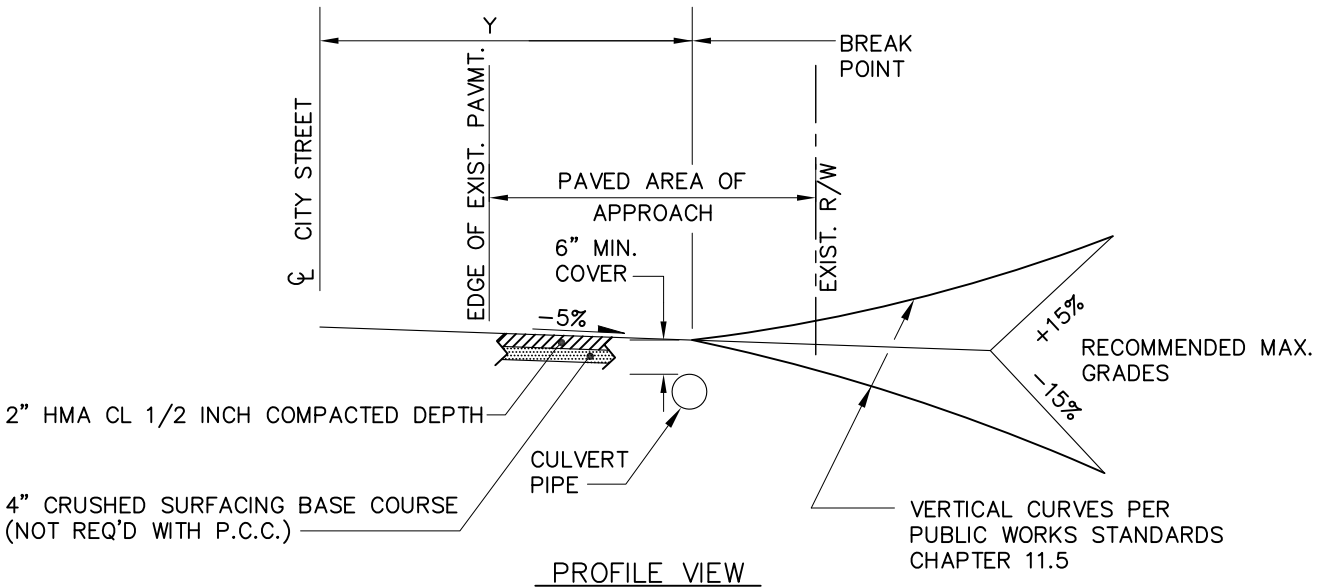

PROFILE VIEW

N.T.S.

1. ALL MATERIALS & WORKMANSHIP SHALL BE IN ACCORDANCE WITH THE REQUIREMENTS OF THE LATEST STATE OF WASHINGTON, DEPT. OF HIGHWAYS STANDARD SPECIFI–CATIONS FOR RAOD & BRIDGE CONSTRUCTION.
2. PAVED APPROACH MAY BE 6" CONCRETE CLASS 4000 WHEN ROADWAY CURB & GUTTER IS PRESENT.
3. STORM DRAINAGE FROM THE ROAD APPROACH SHALL NOT BE PERMITTED TO DRAIN ONTO THE ROADWAY SURFACE. CATCH BASINS OR OTHER DRAINAGE DEVICES SHALL BE USED TO INTERCEPT & DIVERT THIS WATER.
4. FOLLOW ADDITIONAL INSTRUCTIONS AS DIRECTED BY THE APPROVING ENGINEER AS STATED ON THE APPROVED PERMIT.
5. SEE PUBLIC WORK STANDARDS TABLE 11.1 FOR DRIVEWAY WIDTHS.

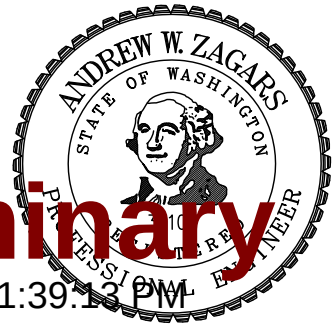

Preliminary
11/09/2016 1:39:13 PM

CITY OF SAMMAMISH
DEPARTMENT OF PUBLIC WORKS

RESIDENTIAL DRIVEWAY

APPROVED BY
CITY ENGINEER _____ DATE _____

REV	DWN	CKD	DATE	FILE
	XXX	XXX	AUG–XX–2015	FIG02–20

REV. NO. X

NOTE:

1. POST SIGNS "NO PARKING FIRE LANE" (R7-1 MUTCD) AND "TOW-AWAY ZONE" (R7-201 MUTCD) AT HAMMERHEAD ENDS.

2. FOR FURTHER DETAILS SEE UPMC 13.15.560.

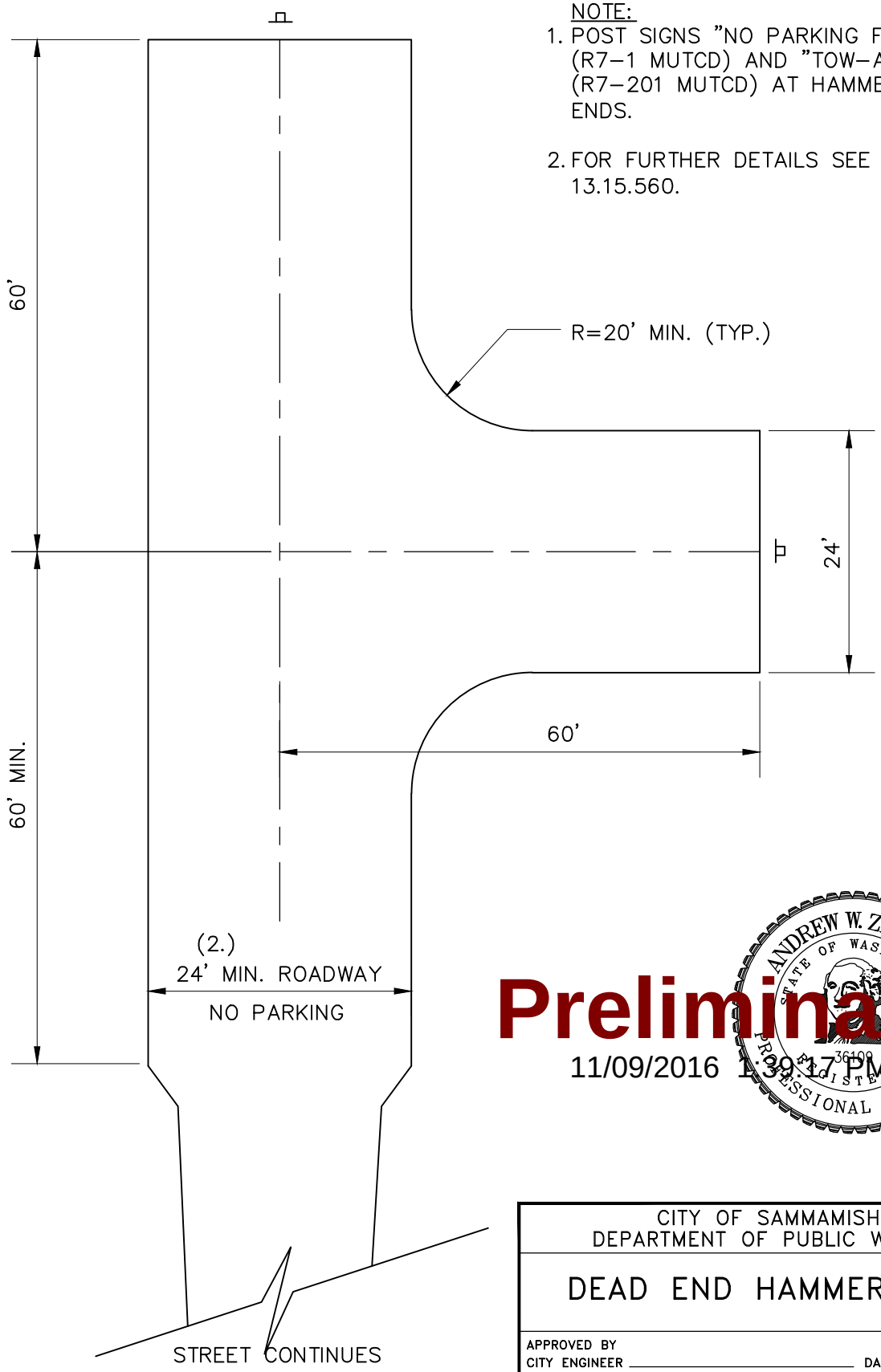

Preliminary

11/09/2016 1:39:17 PM

ANDREW W. ZAGARS
STATE OF WASHINGTON
36109
REGISTERED
PROFESSIONAL ENGINEER

CITY OF SAMMAMISH
DEPARTMENT OF PUBLIC WORKS

DEAD END HAMMERHEAD

APPROVED BY
CITY ENGINEER _____ DATE _____

REV	DWN	CKD	DATE	FILE
	XXX	XXX	AUG-XX-2015	FIG02-21

REV. NO. X

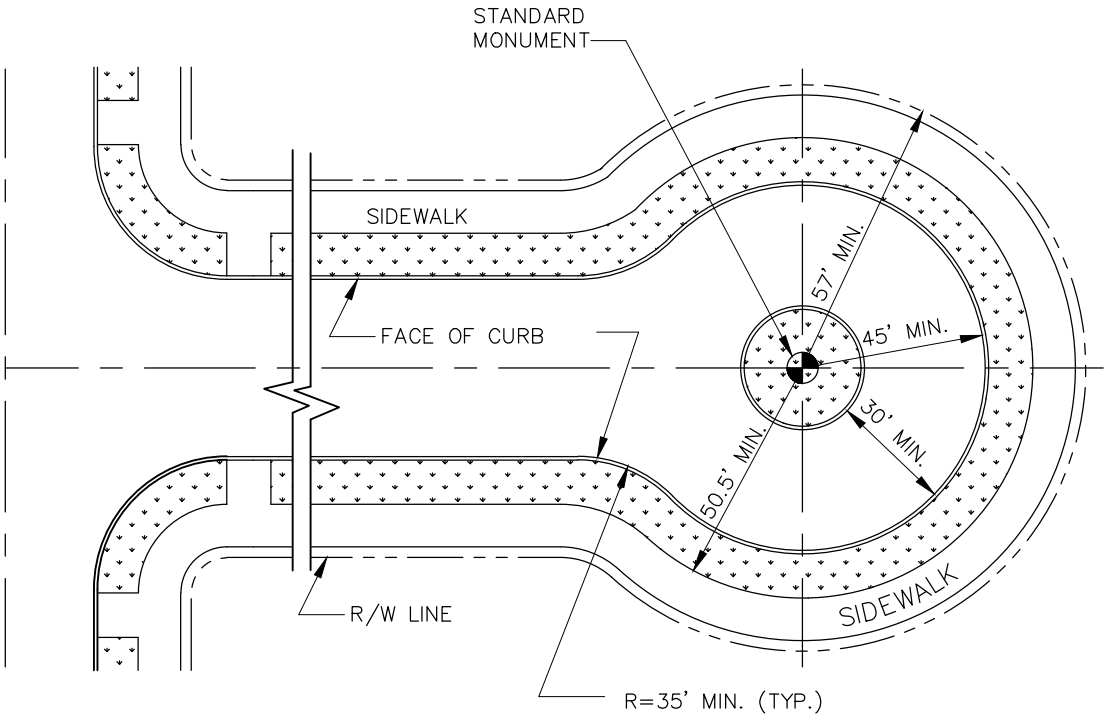

NOTES:
SEE FIG 3-08a FOR CURBS.

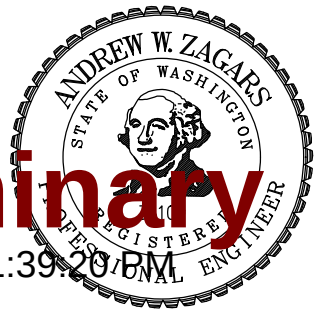

Preliminary

11/09/2016 1:39:20 PM

CITY OF SAMMAMISH DEPARTMENT OF PUBLIC WORKS			
PERMANENT CUL-DE-SAC			
APPROVED BY CITY ENGINEER _____ DATE _____			
DWN XXX	CKD XXX	DATE AUG-XX-2015	FILE FIG02-22

REV

REV. NO. X

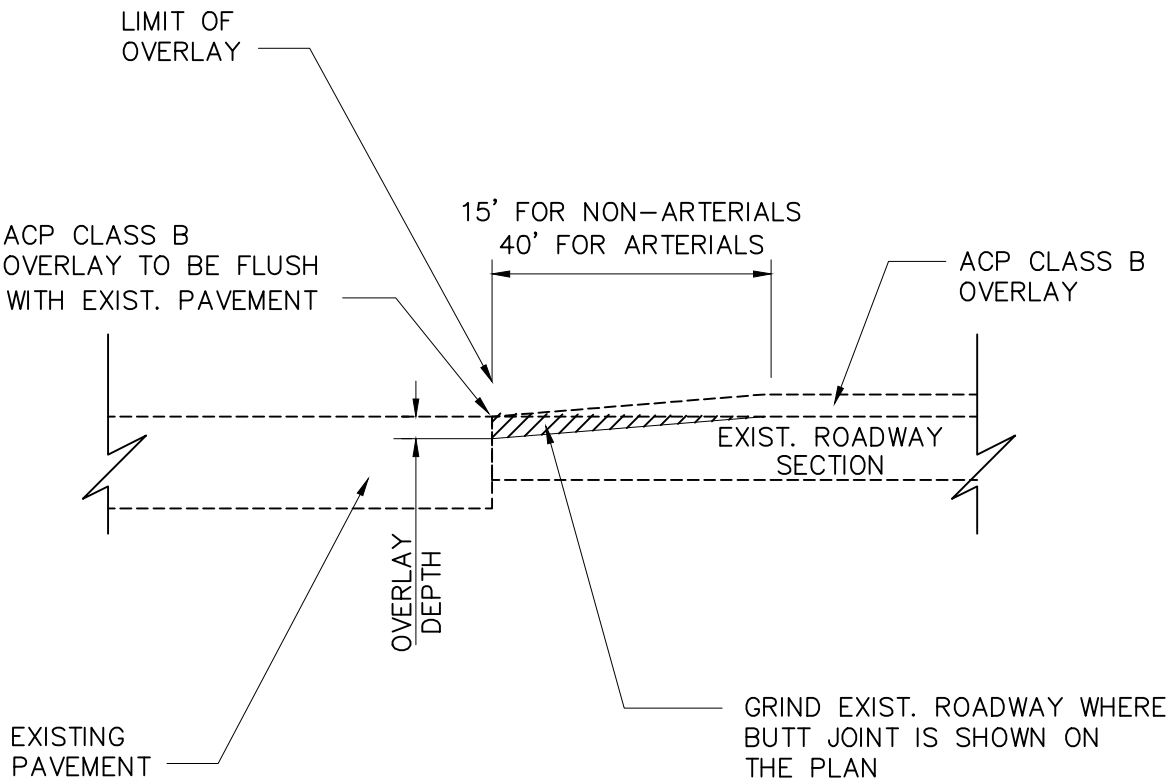

Preliminary
11/09/2016 1:39:22 PM

ANDREW W. ZAGARS
STATE OF WASHINGTON
36109
REGISTERED
PROFESSIONAL ENGINEER

NOTES:

1. EMULSIFIED ASPHALT GRADE CSS-1. TACK SHALL BE APPLIED TO EDGES OF EXISTING PAVEMENT. ALL JOINTS SHALL BE SEALED USING PAVING ASPHALT AR4000W.

CITY OF SAMMAMISH
DEPARTMENT OF PUBLIC WORKS

BUTT JOINT
DETAIL

APPROVED BY
CITY ENGINEER _____ DATE _____

REV	DWN	CKD	DATE	FILE
	XXX	XXX	AUG-XX-2015	FIG02-23

REV. NO. X

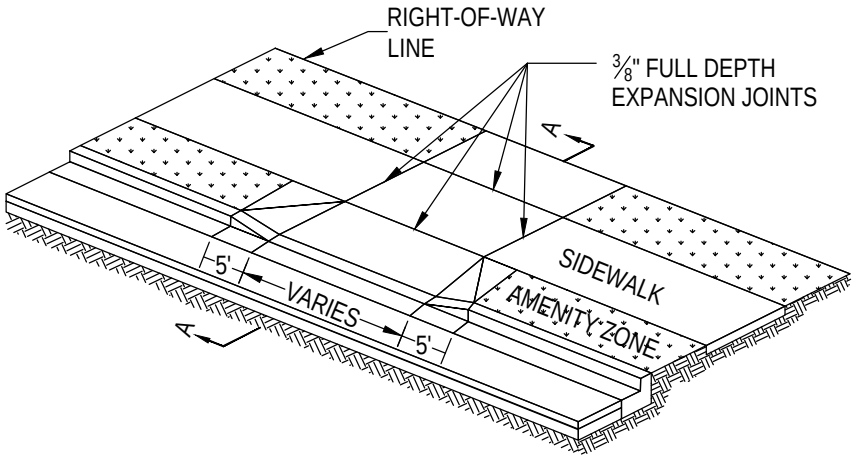

ISOMETRIC VIEW

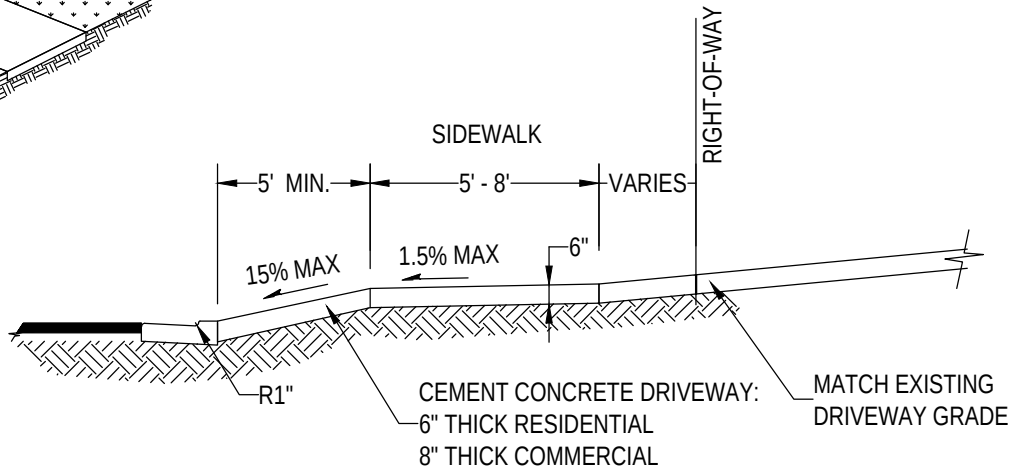

SECTION A-A

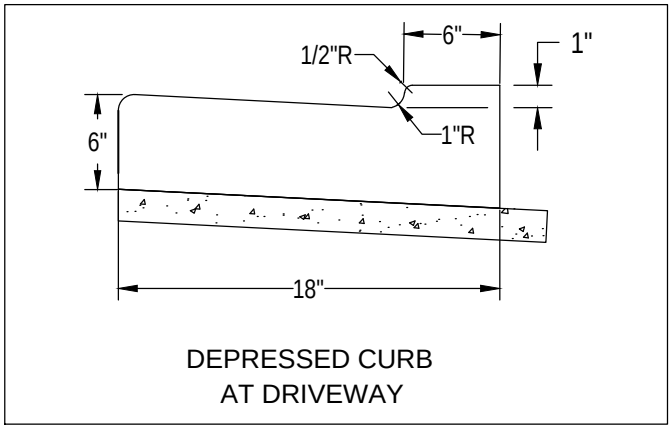

DEPRESSED CURB
AT DRIVEWAY

Preliminary

11/09/2016 1:39:25 PM

NOTES:

1. MATERIAL - WSDOT CONCRETE CLASS 4000.
2. FULL DEPTH EXPANSION JOINT SHALL BE INSTALLED ON CENTER OF APROACH IF DRIVEWAY WIDTH IS 15' OR GREATER.
3. CURB SHALL BE IN COMPLIANCE WITH STD DWG 3-08a.
4. NO REBAR SHALL BE PLACED IN CURB, GUTTER, DRIVEWAY, OR SIDEWALK.

CITY OF SAMMAMISH
DEPARTMENT OF PUBLIC WORKS

CURB AND GUTTER SECTION
DRIVEWAY APPROACH

APPROVED BY
CITY ENGINEER _____ DATE _____

REV	DWN	CKD	DATE	FILE
	TTC	AWZ	AUG-XX-2015	FIG03-01

REV. NO. X

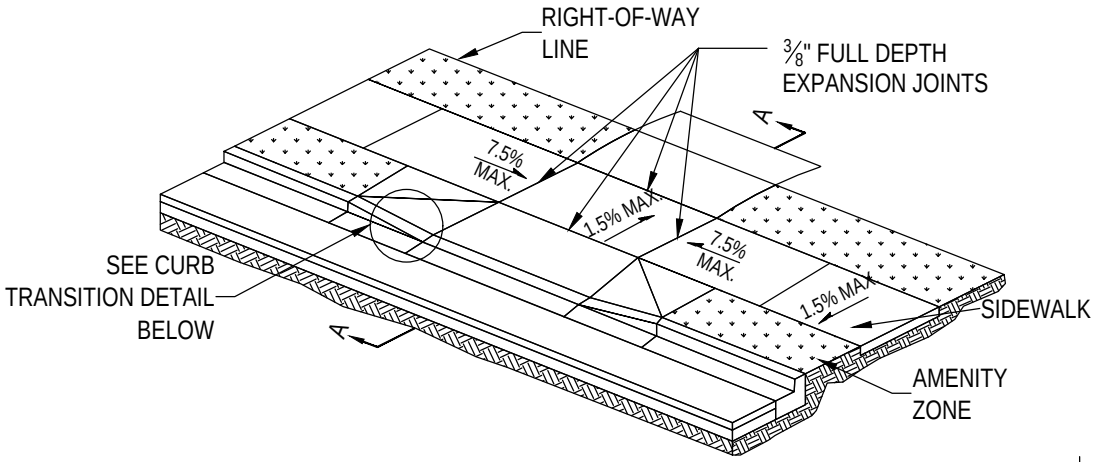

ISOMETRIC VIEW

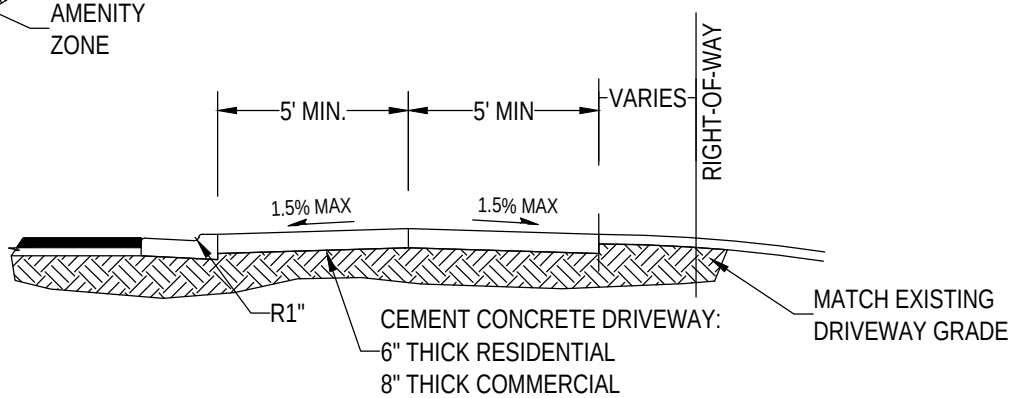

SECTION A-A

NOTES:

1. MATERIAL - WSDOT CONCRETE CLASS 4000.
2. FULL DEPTH EXPANSION JOINT SHALL BE INSTALLED IF DRIVEWAY WIDTH IS 10' OR GREATER.
3. CURB SHALL BE IN COMPLIANCE WITH STD DWG 3-08a.
4. NO REBAR SHALL BE PLACED IN CURB, GUTTER, DRIVEWAY, OR SIDEWALK.

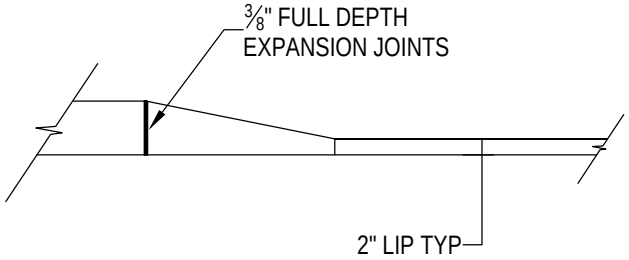

CURB TRANSITION DETAIL

Preliminary

11/09/2016 1:39:27PM

CITY OF SAMMAMISH DEPARTMENT OF PUBLIC WORKS			
DRIVEWAY APPROACH: REVERSE SLOPE			
APPROVED BY CITY ENGINEER _____ DATE _____			
DWN TTC	CKD AWZ	DATE AUG-XX-2015	FILE FIG03-02

REV

REV. NO. X

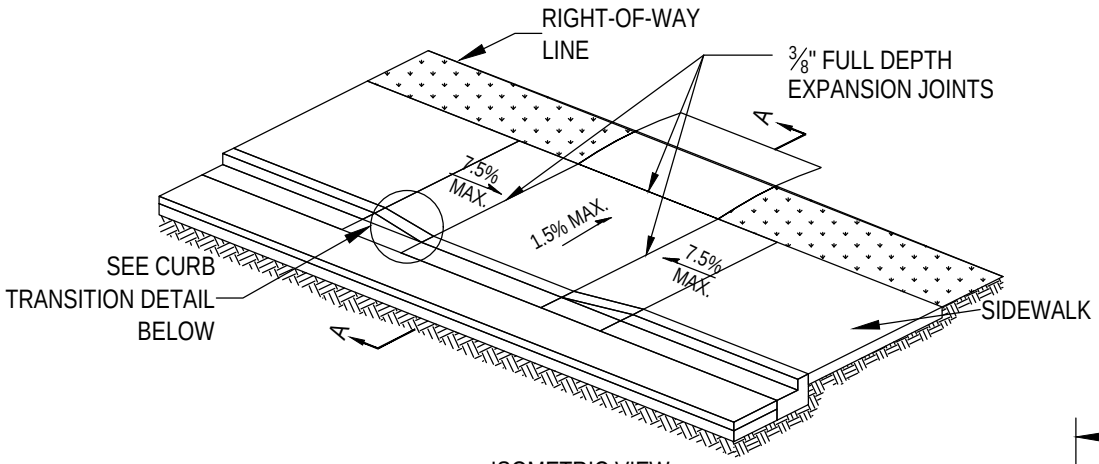

ISOMETRIC VIEW

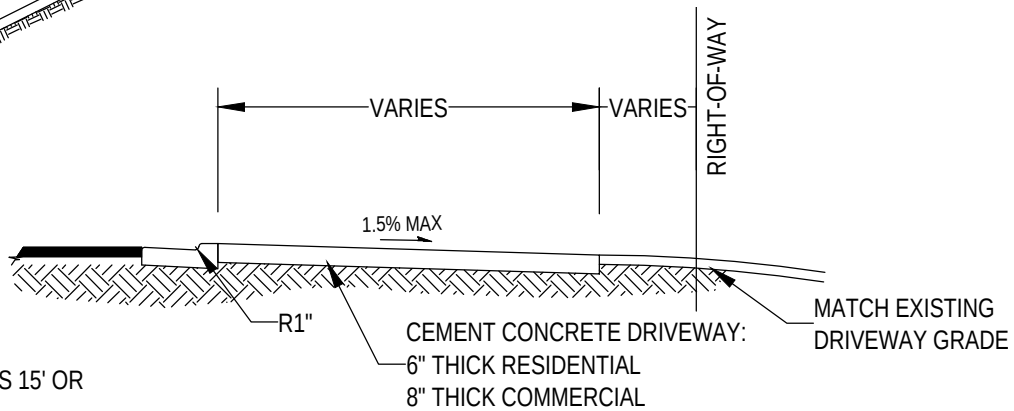

SECTION A-A

NOTES:

1. MATERIAL - WSDOT CONCRETE CLASS 4000.
2. FULL DEPTH EXPANSION JOINT SHALL BE INSTALLED IF DRIVEWAY WIDTH IS 15' OR GREATER.
3. CURB SHALL BE IN COMPLIANCE WITH STD DWG 3-08a.
4. NO REBAR SHALL BE PLACED IN CURB, GUTTER, DRIVEWAY, OR SIDEWALK.

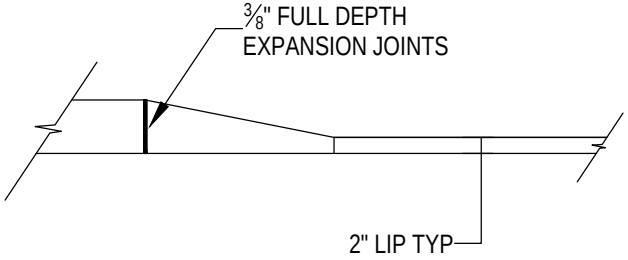

CURB TRANSITION DETAIL

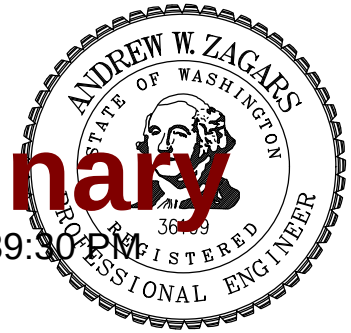

Preliminary

11/09/2016 1:39:30 PM

CITY OF SAMMAMISH
DEPARTMENT OF PUBLIC WORKS

DRIVEWAY APPROACH: REVERSE SLOPE WITHOUT AMENITY ZONE

APPROVED BY
CITY ENGINEER _____ DATE _____

REV	DWN	CKD	DATE	FILE
	TTC	AWZ	AUG-XX-2015	FIG03-03

REV. NO. X

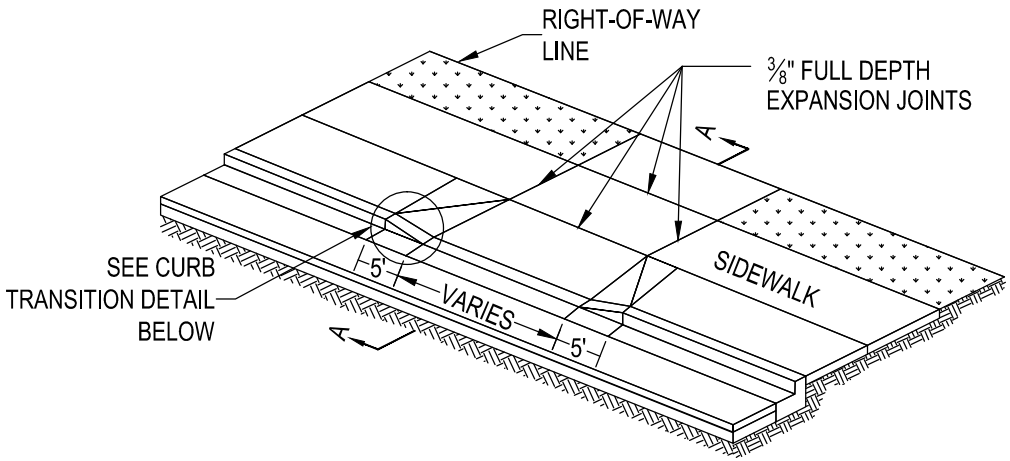

ISOMETRIC VIEW

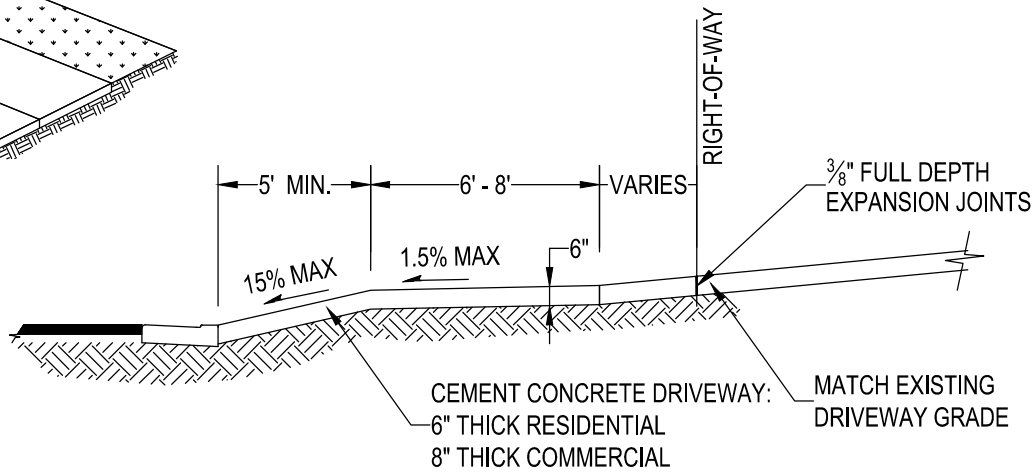

SECTION A-A

NOTES:

1. MATERIAL - WSDOT CONCRETE CLASS 4000.
2. FULL DEPTH EXPANSION JOINT SHALL BE INSTALLED IF DRIVEWAY WIDTH IS 15' OR GREATER.
3. CURB SHALL BE IN COMPLIANCE WITH STD DWG 3-12.
4. NO REBAR SHALL BE PLACED IN CURB, GUTTER, DRIVEWAY, OR SIDEWALK.

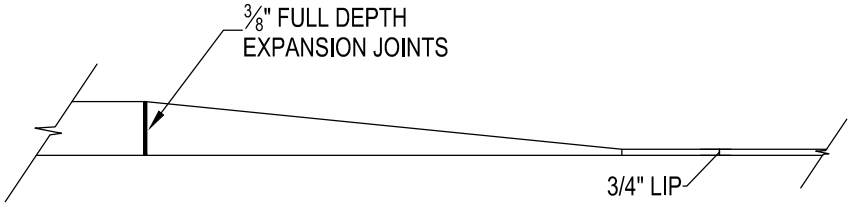

CURB TRANSITION DETAIL

Preliminary

11/09/2016 1:39:32 PM

CITY OF SAMMAMISH DEPARTMENT OF PUBLIC WORKS			
DRIVEWAY APPROACH WITHOUT AMENITY ZONE (8' SIDEWALK WIDTH)			
APPROVED BY CITY ENGINEER _____ DATE _____			
REV	DWN TTC	CKD AWZ	DATE AUG-XX-2015	FILE FIG03-04

REV. NO. X

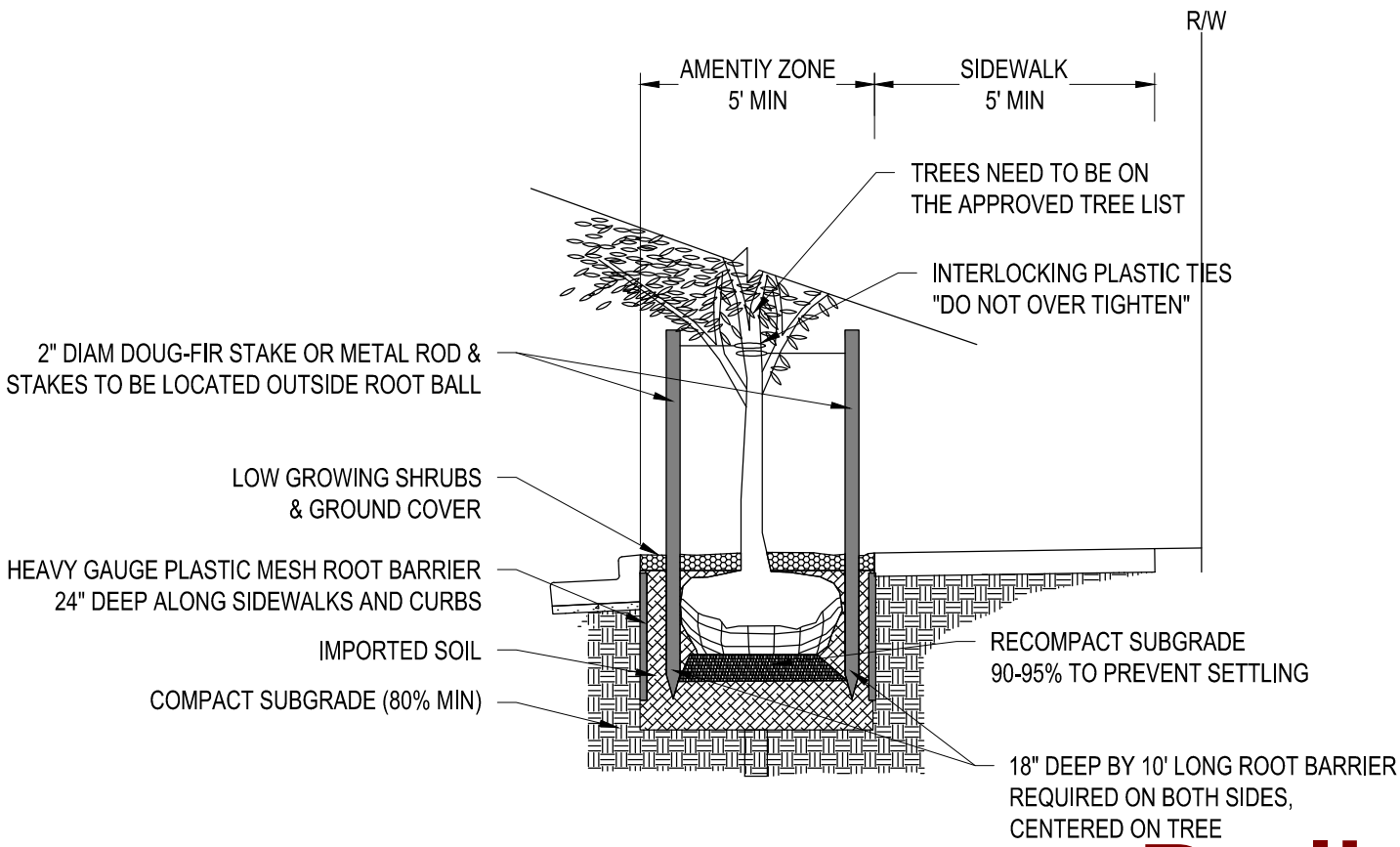

Preliminary
11/09/2016 1:39:35 PM

NOTES:

1. TREE PIT SHALL NOT BE LESS THAN 2 TIMES ROOT BALL DIAM.
2. CUT ALL TIES & FOLD BACK BURLAP FROM UPPER ⅓ OF ROOT BALL.
3. WATER DAILY UNTIL ESTABLISHED, FERTILIZE & USE GROWTH HORMONE.

CITY OF SAMMAMISH
DEPARTMENT OF PUBLIC WORKS

AMENITY ZONE

APPROVED BY
CITY ENGINEER _____ DATE _____

REV	DWN	CKD	DATE	FILE
	TTC	AWZ	AUG-XX-2015	FIG03-05

REV. NO. X

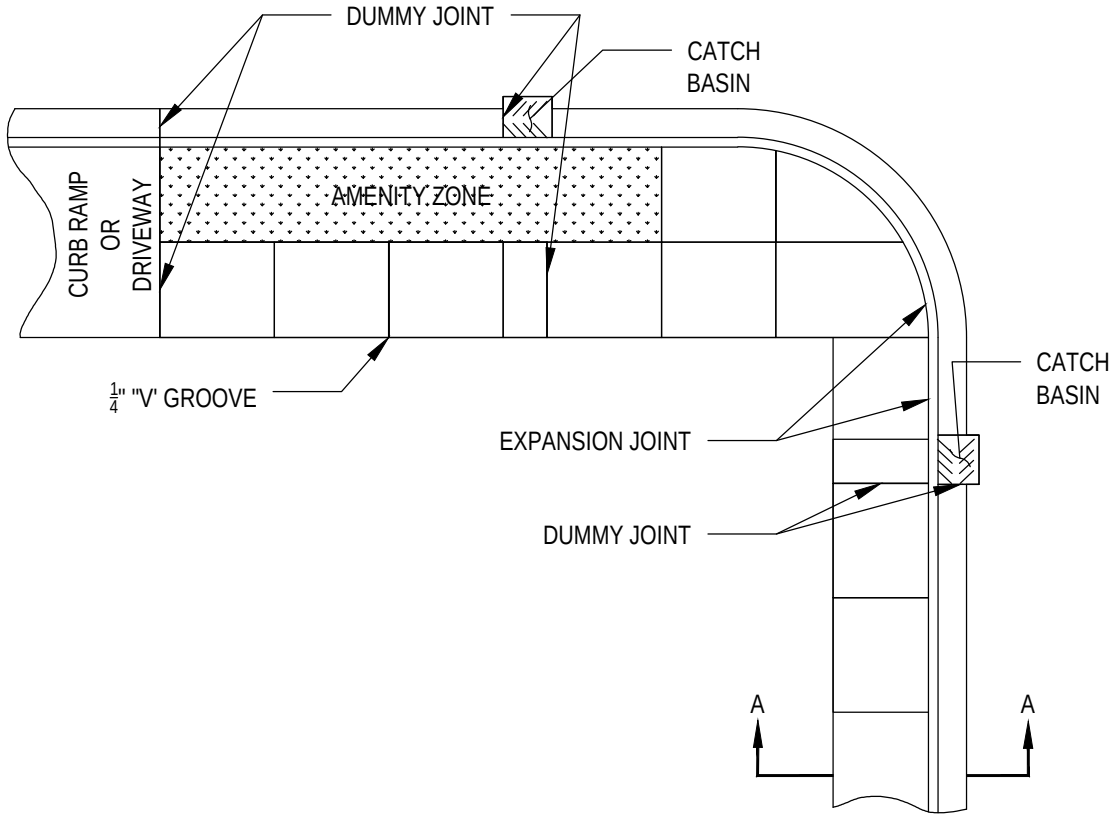

VERTICAL CURB & SIDEWALK

DUMMY JOINT @ MAX. 15' C-C, 10' TYP, 15' MAX

EXPANSION JOINT ALONG CURB

1/4" "V" GROOVE @ MAX. 5' C-C

NOTES:

1. CONCRETE SHALL HAVE 4" PERIMETER EDGING.
2. SIDEWALK JOINTS SHOULD MATCH EXPANSION JOINTS.

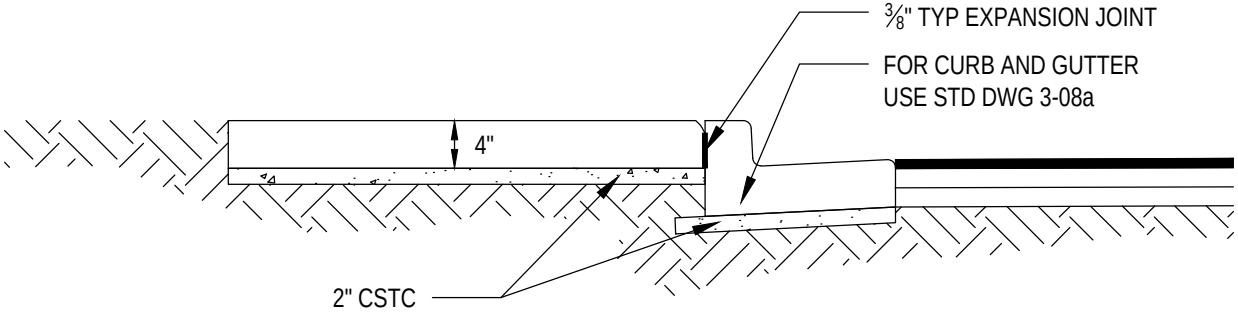

SECTION A-A

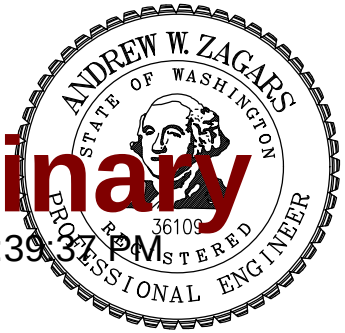

Preliminary

11/09/2016 1:39:37 PM

CITY OF SAMMAMISH DEPARTMENT OF PUBLIC WORKS			
SIDEWALK			
APPROVED BY CITY ENGINEER _____ DATE _____			
DWN TTC	CKD AWZ	DATE AUG-XX-2015	FILE FIG03-06

REV

REV. NO. X

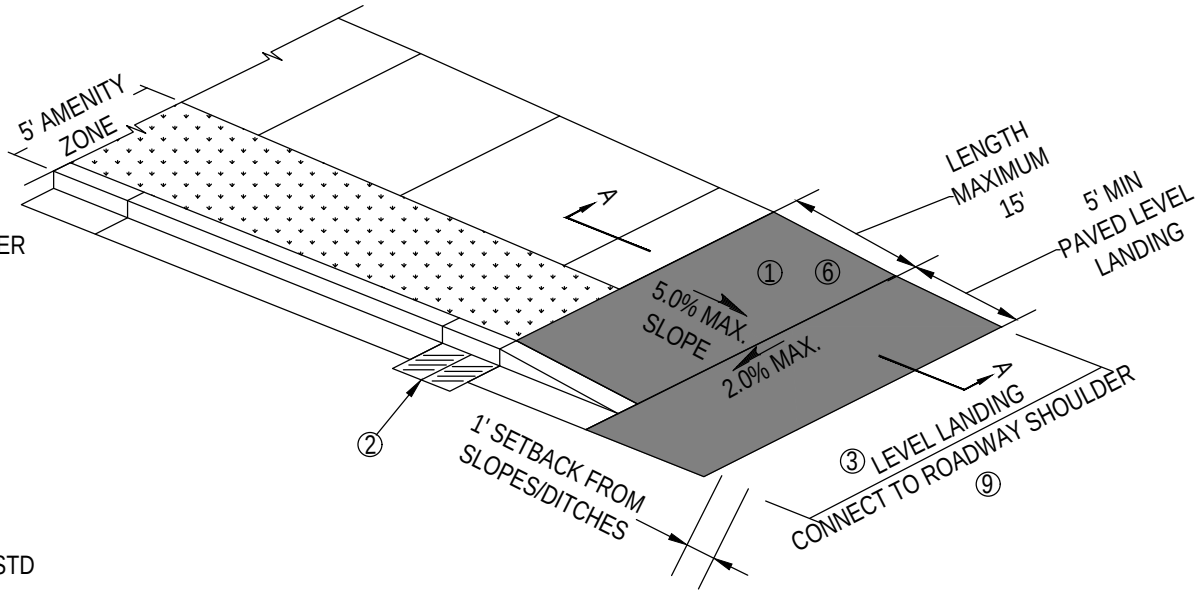

NOTES:

1. RAMP, CURB TAPER, AND LEVEL LANDING ALL ASPHALT OVER 2" CSTC.
2. CATCH BASINS LOCATE AT END OF IMPROVEMENTS TO FACILITATE FUTURE EXTENSIONS/CONNECTIONS.
3. FOR WIDTHS OF PAVEMENT AND SHOULDER SEE STD DWG 1-01, 1-02, 1-03, 1-05.
4. FOR TRANSITIONS ADJACENT TO DITCHES, DITCH SLOPING (3:1 TYPICAL), 1' SETBACK & PIPE BEVEL END DESIGN (SEE STD DWG 7-01) MAY BE REQUIRED.
5. FOR CURB AND SIDEWALK JOINTS SEE STD DWG 3-06.
6. DETECTABLE WARNING PATTERN (TRUNCATED DOMES) MAY BE REQUIRED IF RAMP CROSSES TRAVEL LANE OF PUBLIC STREET OR AS SPECIFIED BY THE CITY TRAFFIC ENGINEER (SEE STD DWG 2-06).
7. CURB RADIUS REQUIRED AT INTERSECTIONS.
8. EXISTING SHOULDER MAY REQUIRE RESTORATION WITH CSTC.

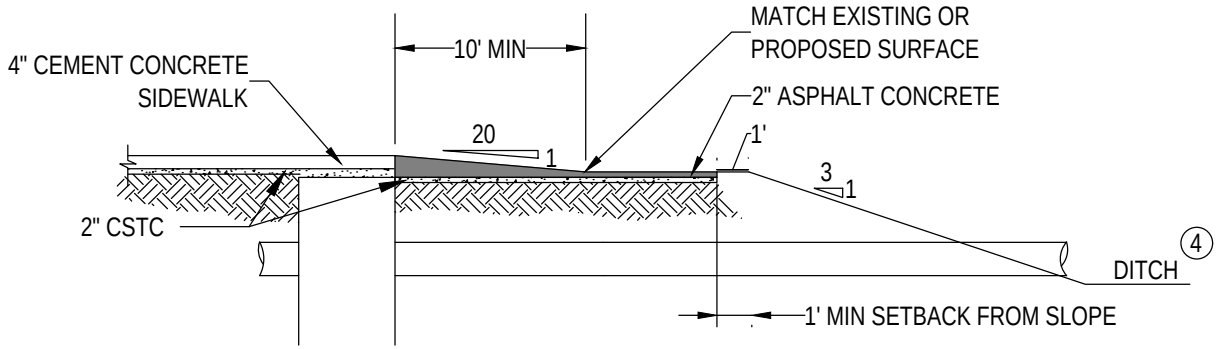

SECTION A-A

Preliminary
11/09/2016 1:39:39 PM

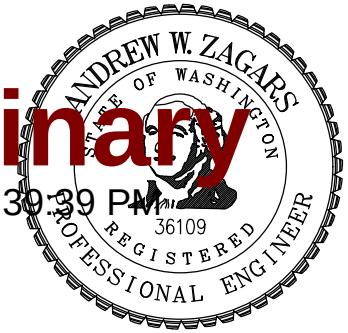

CITY OF SAMMAMISH
DEPARTMENT OF PUBLIC WORKS

ASPHALT TRANSITION RAMP TO SHOULDER

APPROVED BY
CITY ENGINEER _____ DATE _____

REV	DWN	CKD	DATE	FILE
	TTC	AWZ	AUG-XX-2015	FIG03-07

REV. NO. X

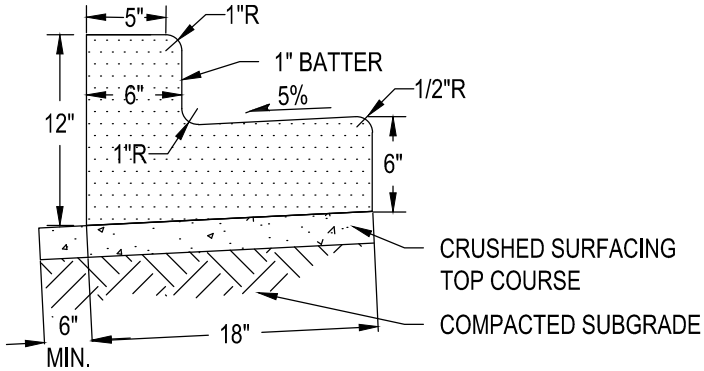

TYPE A CURB AND GUTTER

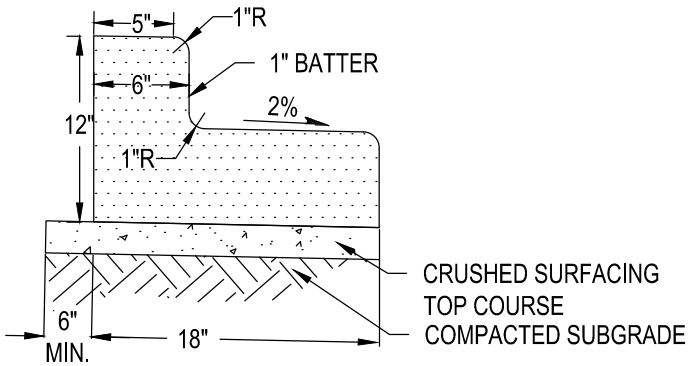

MEDIAN CURB AND GUTTER

NOTES:

1. CONSTRUCT 10 FT LONG CURB TYPE TRANSITION BETWEEN DIFFERENT CURB TYPES.

Preliminary

11/09/2016 1:39:41 PM

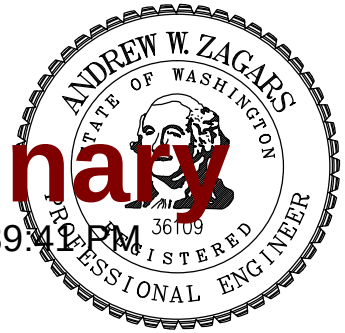

CITY OF SAMMAMISH
DEPARTMENT OF PUBLIC WORKS

CURBS

APPROVED BY
CITY ENGINEER _____ DATE _____

REV	DWN	CKD	DATE	FILE
	TTC	AWZ	AUG-XX-2015	FIG03-8a

REV. NO. X

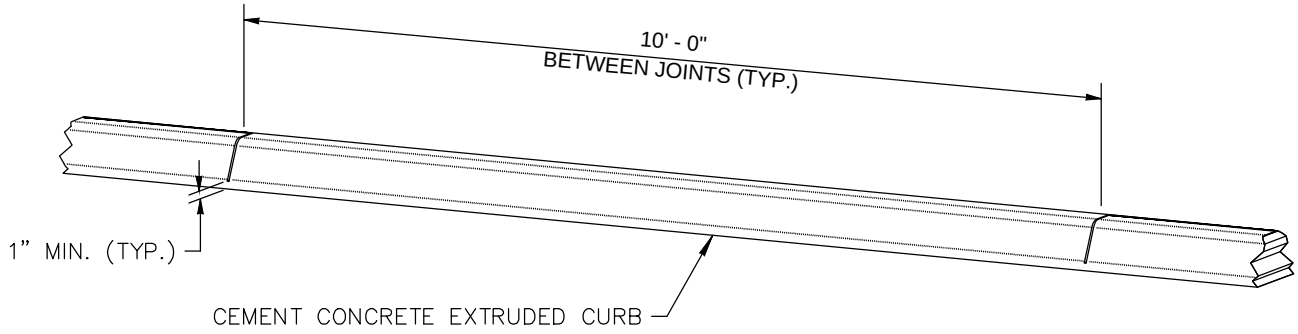

NOTES:
1. INSTALL PAVEMENT 2" BEYOND BACK OF CURB.
2. BOND EXTRUDED CURB TO EXISTING PAVEMENT WITH MORTAR PASTE.
3. JOINTS MAY BE FORMED DURING INSTALLATION USING A RIGID DIVIDER OR SAWCUT AFTER CONCRETE CURES TO MINIMUM STRENGTH.

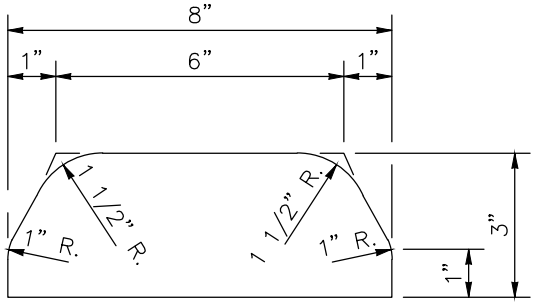

TYPE 4
(CEMENT CONCRETE)

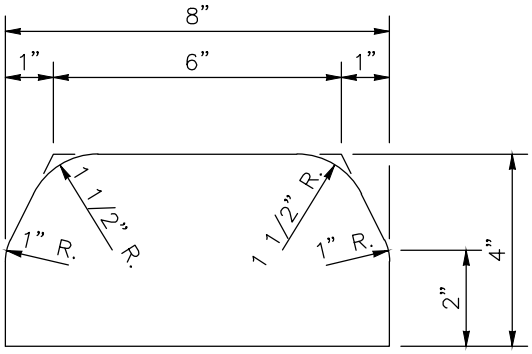

TYPE 5
(CEMENT CONCRETE)

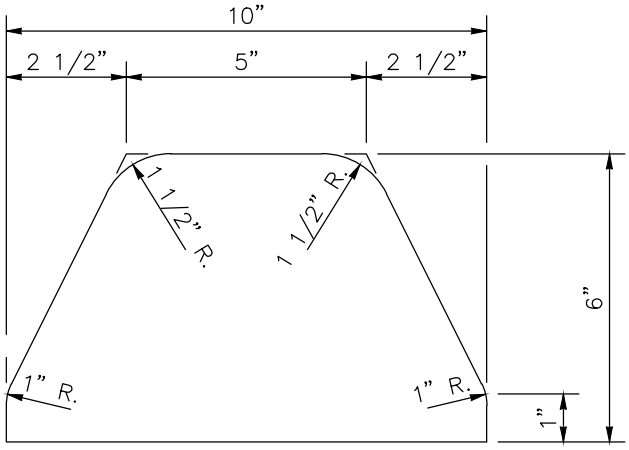

TYPE 6
(CEMENT CONCRETE)

Preliminary
11/09/2016 1:39:44 PM

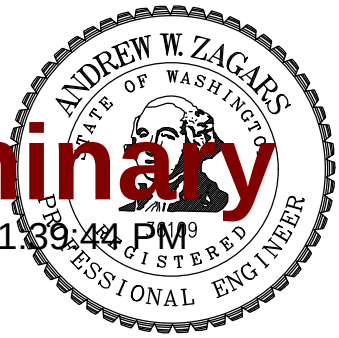

CITY OF SAMMAMISH
DEPARTMENT OF PUBLIC WORKS

EXTRUDED CURB DETAIL

APPROVED BY
CITY ENGINEER _____ DATE _____

REV	DWN	CKD	DATE	FILE
	XXX	XXX	AUG-XX-2015	FIG03-08b

REV. NO. X

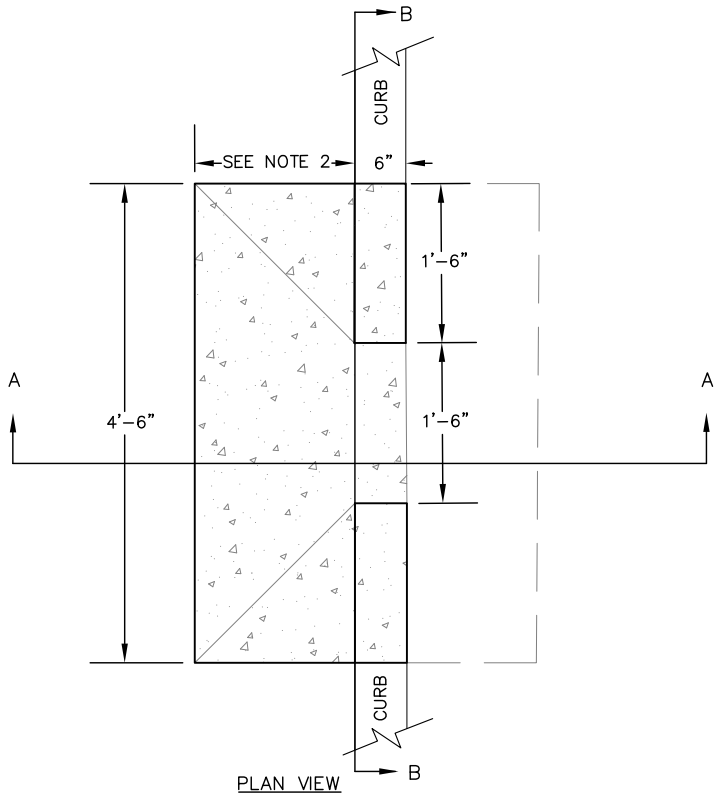

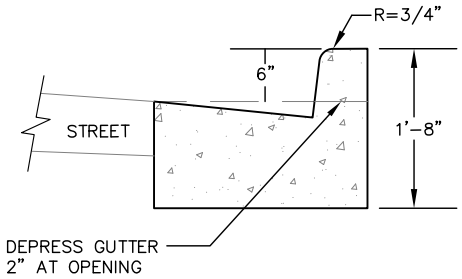

SECTION A-A

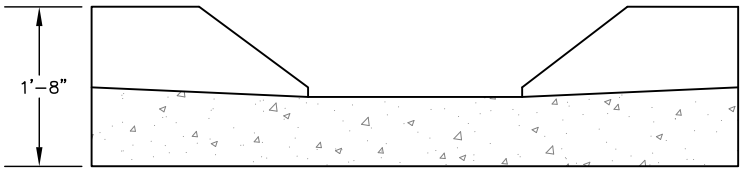

SECTION B-B

NOTES:

1. SPLASH PADS ARE REQUIRED AT ALL INLETS.
2. MATCH GUTTER PAN OF ADJACENT CURB AND GUTTER.

Preliminary
11/09/2016 1:39:48 PM

– NOT TO SCALE –

CITY OF SAMMAMISH
DEPARTMENT OF PUBLIC WORKS

CONCRETE CURB INLET

APPROVED BY
CITY ENGINEER _____ DATE _____

REV	DWN	CKD	DATE	FILE
	LG		SEPT-7-2016	3-09a

REV. NO. X

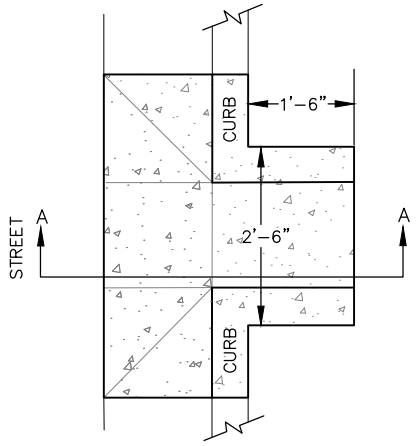

DETAIL A – WITH WINGWALLS AND CONCRETE PAD

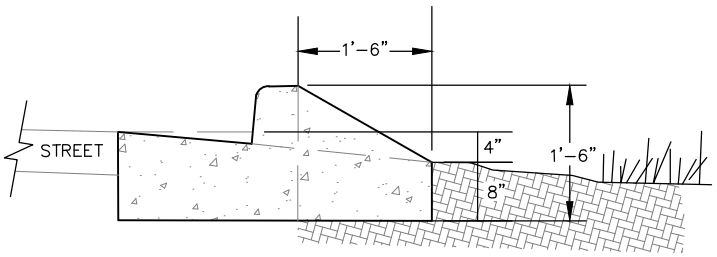

SECTION A–A

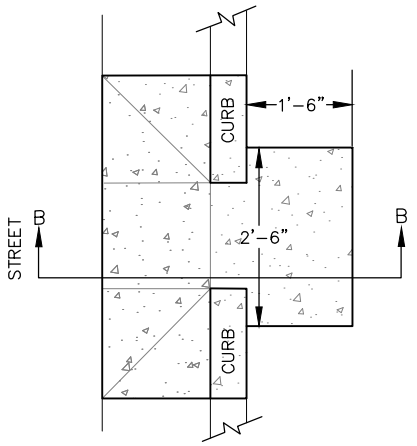

DETAIL B – WITH CONCRETE PAD ONLY

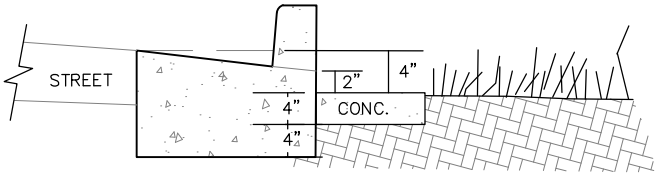

SECTION B–B

Preliminary

11/09/2016 1:39:51 PM

– NOT TO SCALE –

CITY OF SAMMAMISH DEPARTMENT OF PUBLIC WORKS			
CONCRETE CURB INLET			
APPROVED BY CITY ENGINEER _____ DATE _____			
DWN LG	CKD	DATE SEPT–7–2016	FILE 3–09b

REV

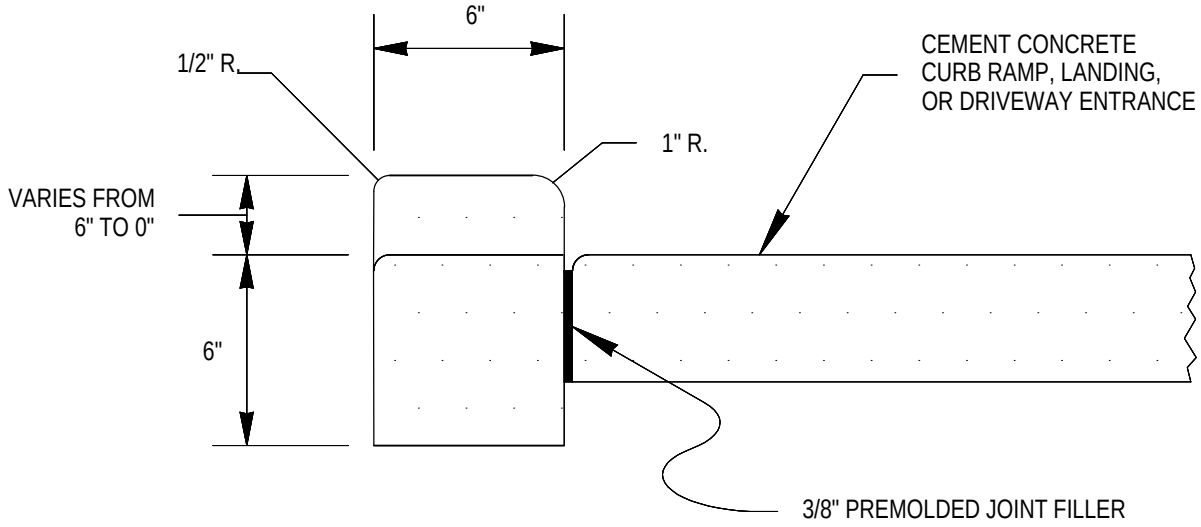

Preliminary

11/09/2016 1:39:53 PM

ANDREW W. ZAGARS
STATE OF WASHINGTON
REGISTERED
3610
PROFESSIONAL ENGINEER

CITY OF SAMMAMISH
DEPARTMENT OF PUBLIC WORKS

PEDESTRIAN CURB

APPROVED BY
CITY ENGINEER _____ DATE _____

REV	DWN	CKD	DATE	FILE
	XXX	XXX	AUG-XX-2015	FIG03-11

REV. NO. X

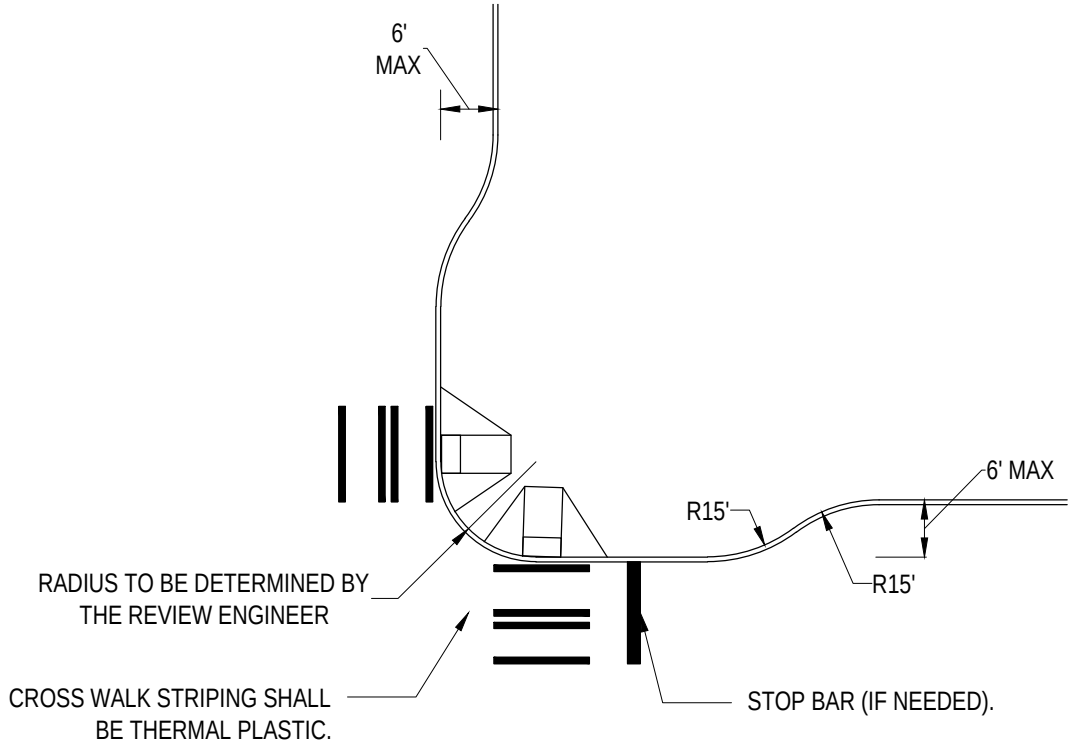

Preliminary

11/09/2016 1:39:56 PM

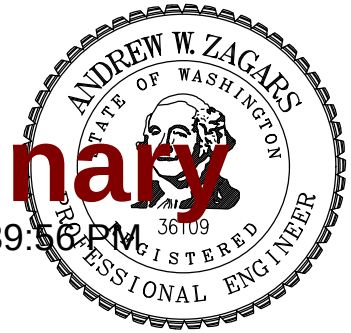

NOTES:

1. INTERSECTION RADII SHALL ACCOMMODATE DESIGN VEHICLES APPLICABLE TO STREET.

2. LENGTH OF CURB EXTENSIONS MUST RECOGNIZE SITE CONDITIONS, E.G. DRIVEWAY LOCATIONS.

CITY OF SAMMAMISH
DEPARTMENT OF PUBLIC WORKS

CURB EXTENSION

APPROVED BY
CITY ENGINEER _____ DATE _____

REV	DWN	CKD	DATE	FILE
	XXX	XXX	AUG-XX-2015	FIG03-12

REV. NO. X

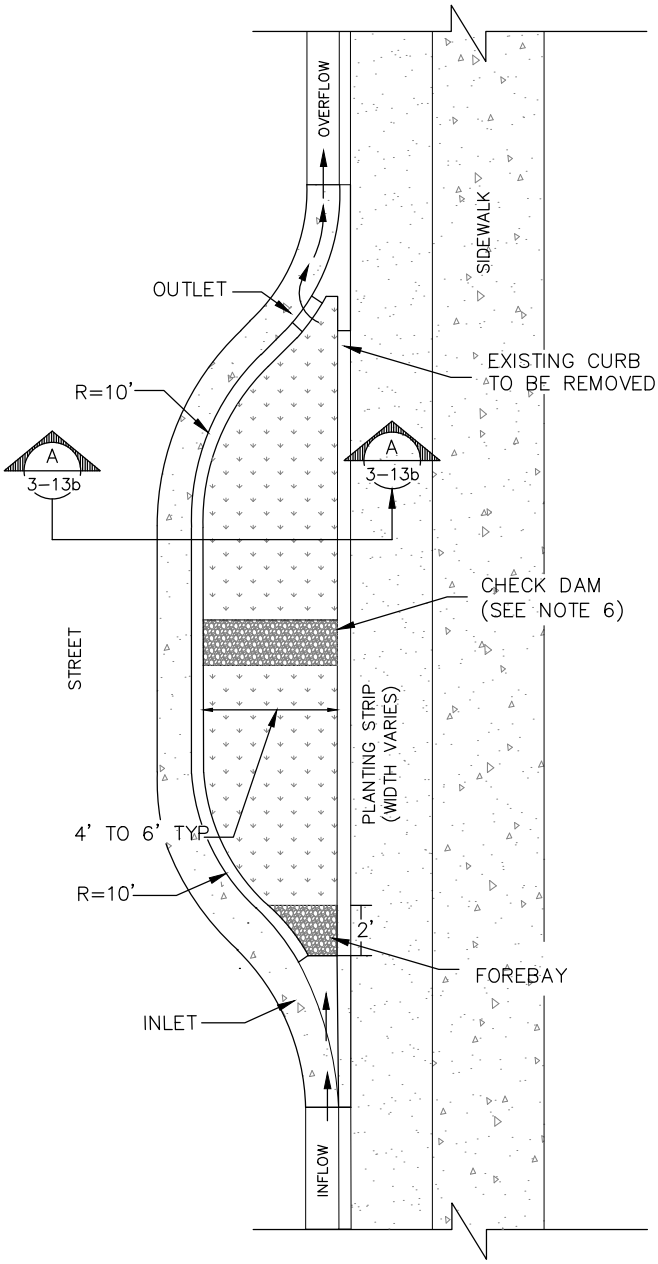

PLAN VIEW

NOTES:

1. AREA AND DEPTH OF FACILITY ARE BASED UPON ENGINEERING CALCULATIONS AND RIGHT OF WAY CONSTRAINTS.
2. LONGITUDINAL SLOPE OF PLANTER MATCHES ROAD.
3. INCLUDE BEGINNING AND ENDING STATIONS FOR EACH FACILITY. PROVIDE STATIONS AND ELEVATIONS AT EVERY INLET, OUTLET, AND CHECK DAM.
4. SIDEWALK ELEVATION MUST BE SET ABOVE INLET AND OUTLET ELEVATIONS TO ALLOW OVERFLOW TO DRAIN TO STREET BEFORE SIDEWALK.
5. INLETS AND OUTLETS REQUIRED.
6. CHECK DAMS MAY BE REQUIRED.
7. SEE CITY SURFACE WATER DESIGN MANUAL FOR FACILITY MEDIA REQUIREMENTS.
8. SPECIAL REQUIREMENTS FOR WATER LINES, METERS, AND FIRE HYDRANTS. SEE WATER DISTRICT FOR REQUIREMENTS.
9. UTILITY LINES MAY NEED TO BE SLEEVED OR RELOCATED.
10. WHERE FEASIBLE, WIDTH OF STORMWATER FACILITY SHOULD EXTEND INTO EXISTING PLANTING STRIP.

IMPORTANT: Utility conflicts and existing conditions can create major design variables. Locate utilities and survey existing conditions prior to beginning design work.

Preliminary
11/09/2016 1:39:58 PM

– NOT TO SCALE –

CITY OF SAMMAMISH DEPARTMENT OF PUBLIC WORKS			
CURB EXTENSION SECTION			
APPROVED BY CITY ENGINEER _____ DATE _____			
DWN LG	CKD	DATE SEPT-7-2016	FILE FIG03-13A

REV

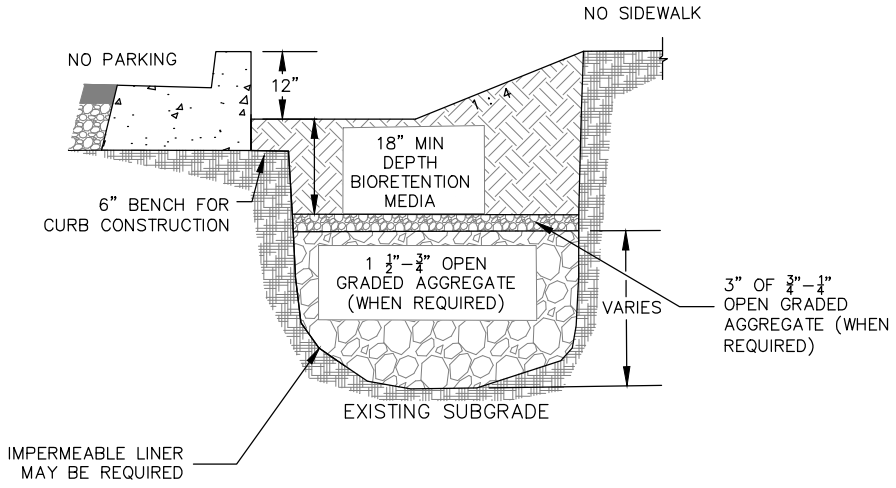

SECTION A–A
CURB EXTENSION SECTION
WITHOUT SIDEWALK

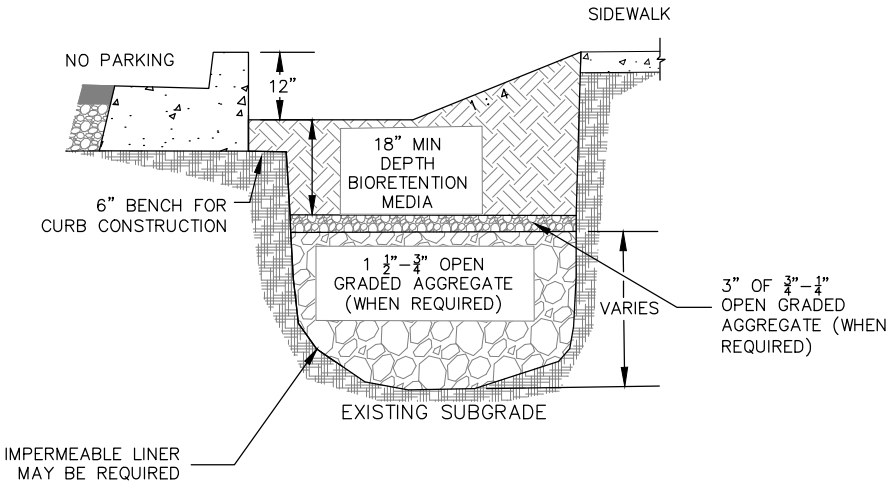

SECTION A–A
CURB EXTENSION SECTION
WITH SIDEWALK

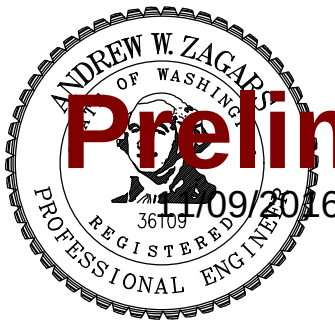

Preliminary
11/09/2016 1:40:04 PM

– NOT TO SCALE –

CITY OF SAMMAMISH
DEPARTMENT OF PUBLIC WORKS

CURB EXTENSION SECTION

APPROVED BY
CITY ENGINEER _____ DATE _____

REV	DWN	CKD	DATE	FILE
	LG		SEPT–7–2016	FIG03–13B

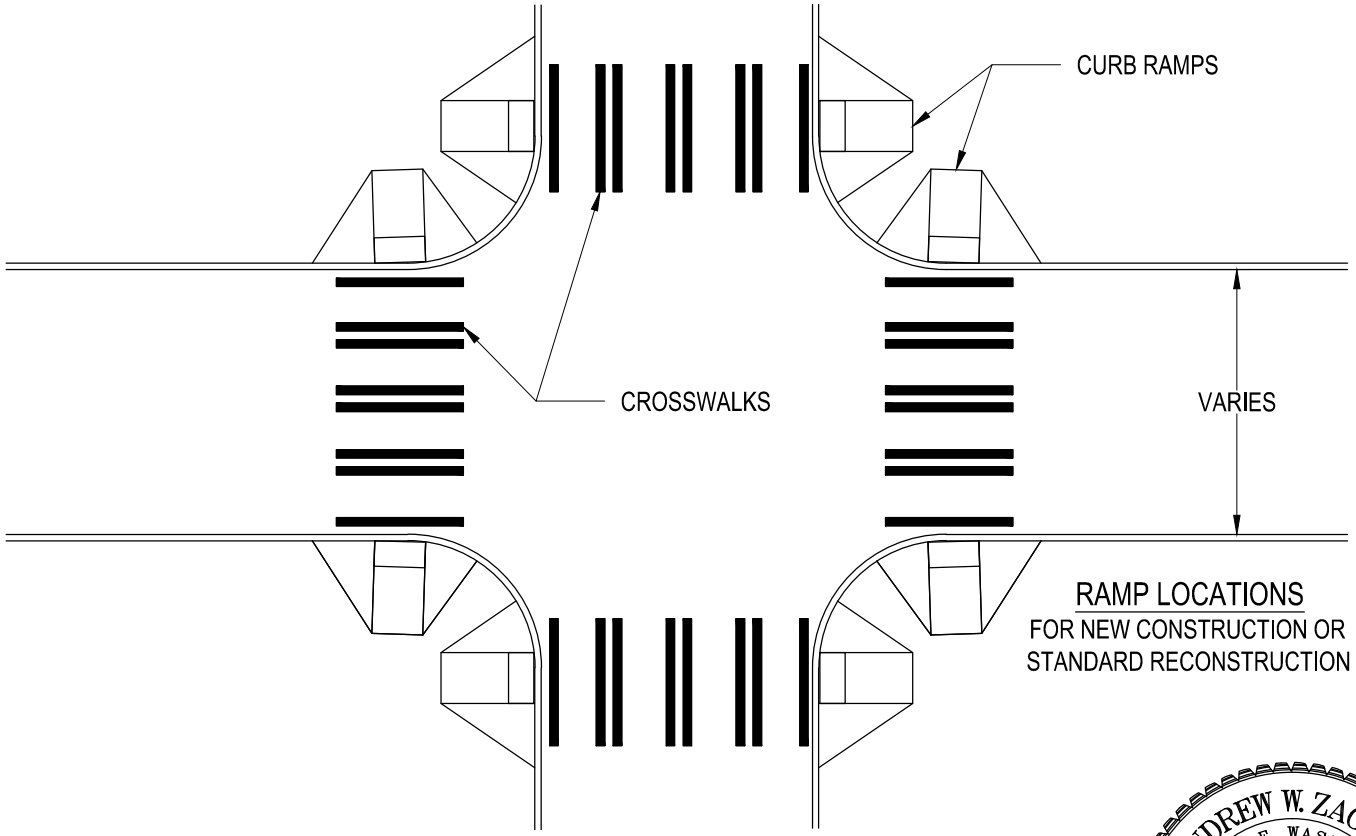

RAMP LOCATIONS
FOR NEW CONSTRUCTION OR
STANDARD RECONSTRUCTION

NOTES:

1. CURB RAMP CONSTRUCTION MUST COMPLY WITH CURRENT ADA STANDARDS.
2. CONSTRUCT RAMP WITH A MINIMUM 1' CLEARANCE FROM FIXED OBJECTS SUCH AS HYDRANTS, POLES, INLETS, AND OTHER UTILITIES.
3. CONSTRUCT RAMP IN ACCORDANCE WITH FIG02-06.
4. CROSSWALKS ARE ONLY MARKED PER PLAN OR AS DIRECTED BY ENGINEER.
5. WHEN RAMPS ARE CONSTRUCTED ON ONE SIDE OF STREET, RAMPS SHALL BE CONSTRUCTED AT CORRESPONDING LOCATIONS ON OPPOSITE SIDE OF STREET.

Preliminary
11/09/2016 1:40:06 PM

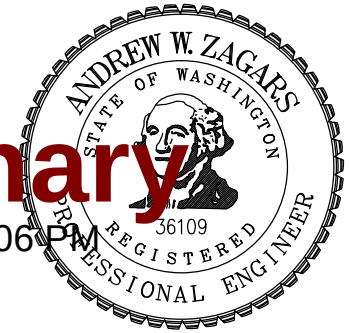

CITY OF SAMMAMISH
DEPARTMENT OF PUBLIC WORKS

CURB RAMP LOCATIONS

APPROVED BY
CITY ENGINEER _____ DATE _____

REV	DWN	CKD	DATE	FILE
	XXX	XXX	AUG-XX-2015	FIG03-14

REV. NO. X

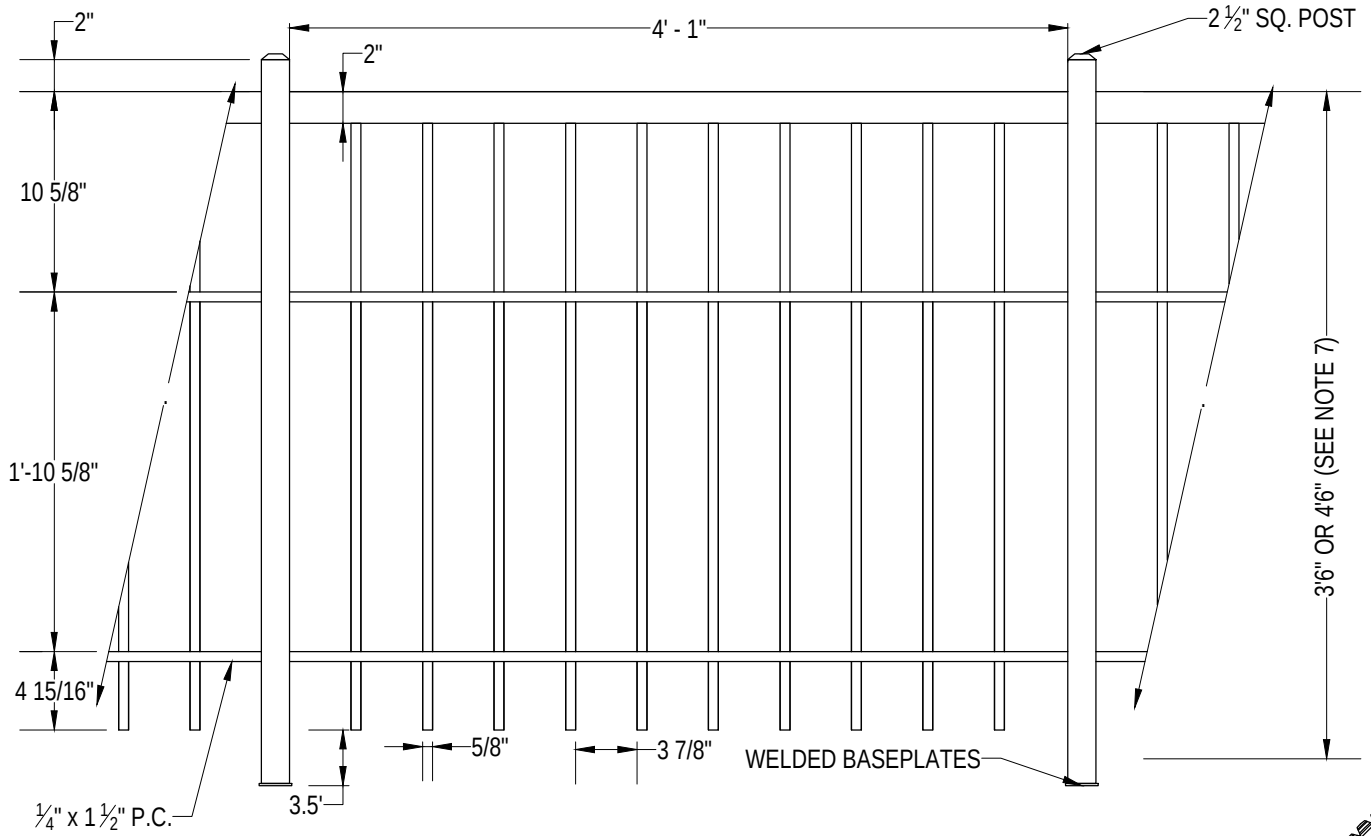

NOTES:

1. SHOP DRAWINGS OF RAILING SHALL BE SUBMITTED FOR APPROVAL SHOWING COMPLETE DIMENSIONS AND DETAILS OF FABRICATION AND INCLUDING AN ERECTION DIAGRAM. MATERIALS BEING USED SHALL BE SPECIFIED IN THE SHOP DRAWINGS.
2. ALL ALUMINUM PARTS SHALL BE GIVEN A CLEAR ANODIC COATING AT LEAST 0.0006 INCH THICK AND BE HOT WATER SEALED AND SHALL HAVE A UNIFORM FINISH.
3. CUTTING SHALL BE DONE BY SAWING OR MILLING AND ALL CUTS SHALL BE TRUE AND SMOOTH. FLAME CUTTING WILL NOT BE PERMITTED.
4. PIPE RAILING, PIPE BALUSTERS AND PIPE RAILING SPLICES SHALL BE ADEQUATELY WRAPPED TO ENSURE SURFACE PROTECTION DURING HANDLING AND TRANSPORTATION TO THE JOB SITE.
5. WELDING OF ALUMINUM SHALL BE IN ACCORDANCE WITH THE LATEST AASHTO STANDARD SPECIFICATIONS FOR STRUCTURAL SUPPORTS FOR HIGHWAY SIGNS, LUMINAIRES AND TRAFFIC SIGNALS.
6. ALLOW FOR EXPANSION AT APPROXIMATELY EVERY FOURTH POST.
7. TOP OF RAIL:
   3 FEET 6 INCHES FOR PEDESTRIAN USES
   4 FEET 6 INCHES FOR COMBINED BICYCLE AND PEDESTRIAN USES
8. 50LB RAIL LOADING PER IBC, CURRENT EDITION.
9. ALL CONCEALED FASTENERS THROUGHOUT.
10. MILD STEEL.
11. BLACK POWDER COATED.

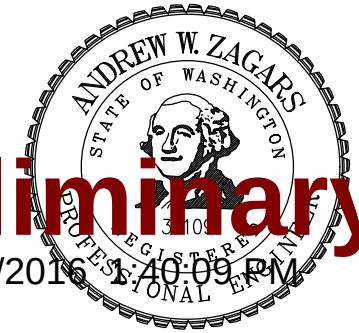

Preliminary

11/09/2016 1:40:09 PM

CITY OF SAMMAMISH
DEPARTMENT OF PUBLIC WORKS

PEDESTRIAN RAILING

APPROVED BY
CITY ENGINEER _____ DATE _____

REV	DWN	CKD	DATE	FILE
	XXX	XXX	AUG-XX-2015	FIG03-15

REV. NO. X

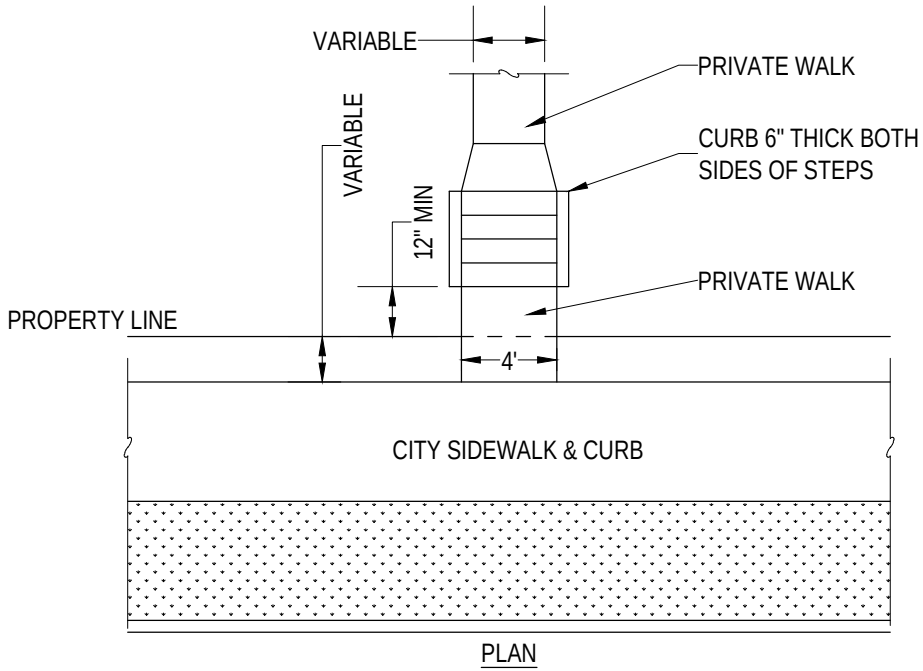

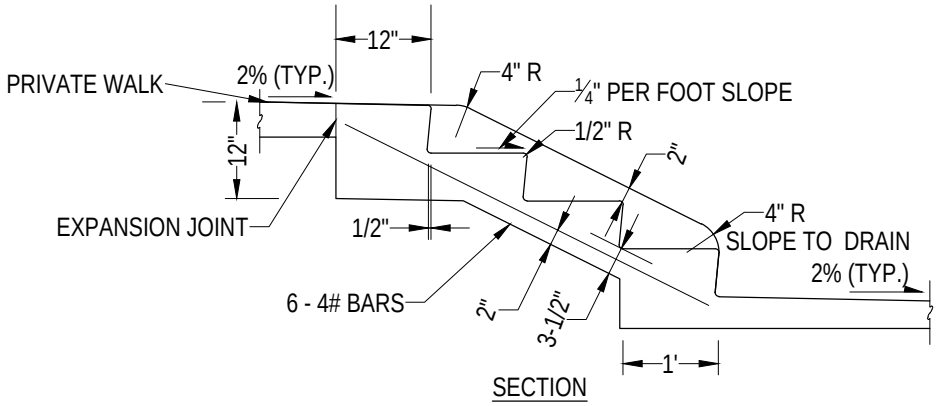

Preliminary

11/09/2016 1:40:13 PM

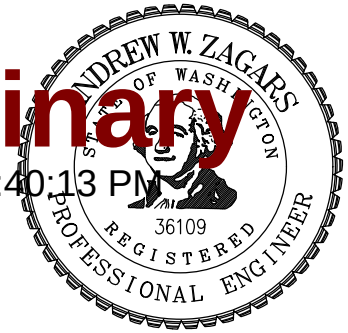

NOTES:

1. STEPS SHALL BE A MINIMUM OF 4'-0" WIDE, CURB TO CURB, PLUS 6" CURBS ON EACH SIDE.
2. CEMENT CONCRETE SHALL BE CLASS 4000psi TROWEL FINISH.
3. NUMBER OF STEPS SHALL SUIT INDIVIDUAL CONDITIONS, WITH TREAD AND RISER DIMENSIONS TO SUIT THE GRADE.
4. RISERS SHALL BE 5" MINIMUM, 7" MAXIMUM: TREAD SHALL BE 11" MINIMUM, 12" MAXIMUM.
5. HANDRAIL REQUIRED ON BOTH SIDES PER IBC.
6. ALL STEPS SHALL BE UNIFORM HEIGHT & DEPTH.

CITY OF SAMMAMISH
DEPARTMENT OF PUBLIC WORKS

STAIRS

APPROVED BY
CITY ENGINEER _____ DATE _____

REV	DWN	CKD	DATE	FILE
	XXX	XXX	AUG-XX-2015	FIG03-16

REV. NO. X

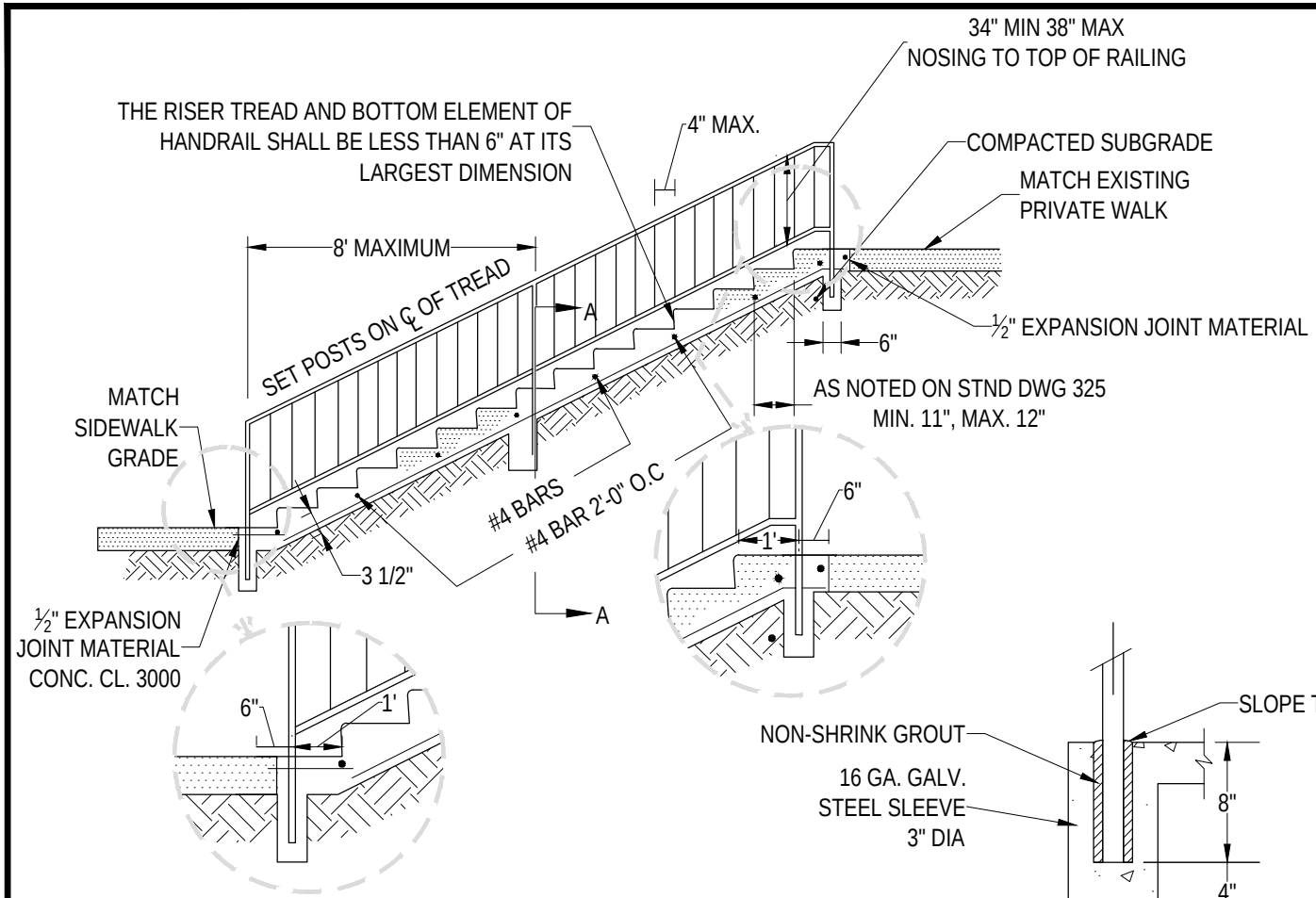

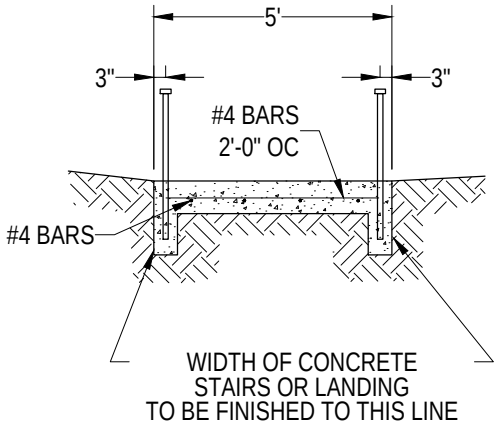

SECTION A-A

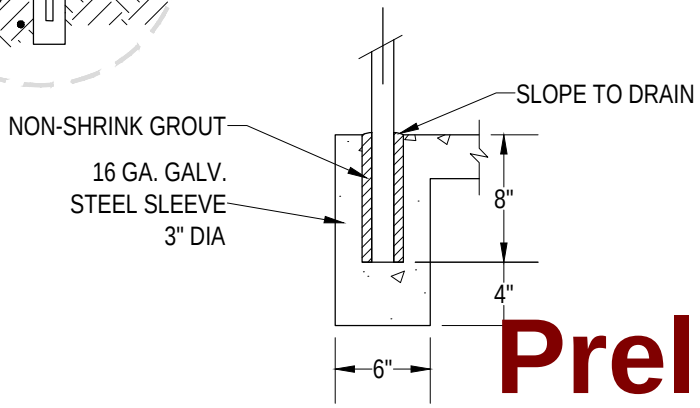

POST DETAIL

Preliminary

11/09/2016 1:40:15 PM

NOTES:

1. CEMENT CONCRETE STEPS AND CURBS SHALL BE CONSTRUCTED AS SHOWN ON STD DWG 3-16.
2. HEIGHT OF RAILING SHALL BE 36" MINIMUM, 38" MAXIMUM TOP OF NOSING TO TOP OF RAILING.
3. PEDESTRIAN RAILING SHALL BE CONSTRUCTED AS SHOWN ON STD DWG 3-15.
4. CLEAR SPACE BETWEEN BALUSTERS SHALL BE A MAXIMUM OF 4".
5. ALL STEPS SHALL HAVE HANDRAIL ON BOTH SIDES.

CITY OF SAMMAMISH
DEPARTMENT OF PUBLIC WORKS

CEMENT CONCRETE STAIRWAY

APPROVED BY
CITY ENGINEER _____ DATE _____

REV	DWN	CKD	DATE	FILE
	XXX	XXX	AUG-XX-2015	FIG03-17

REV. NO. X

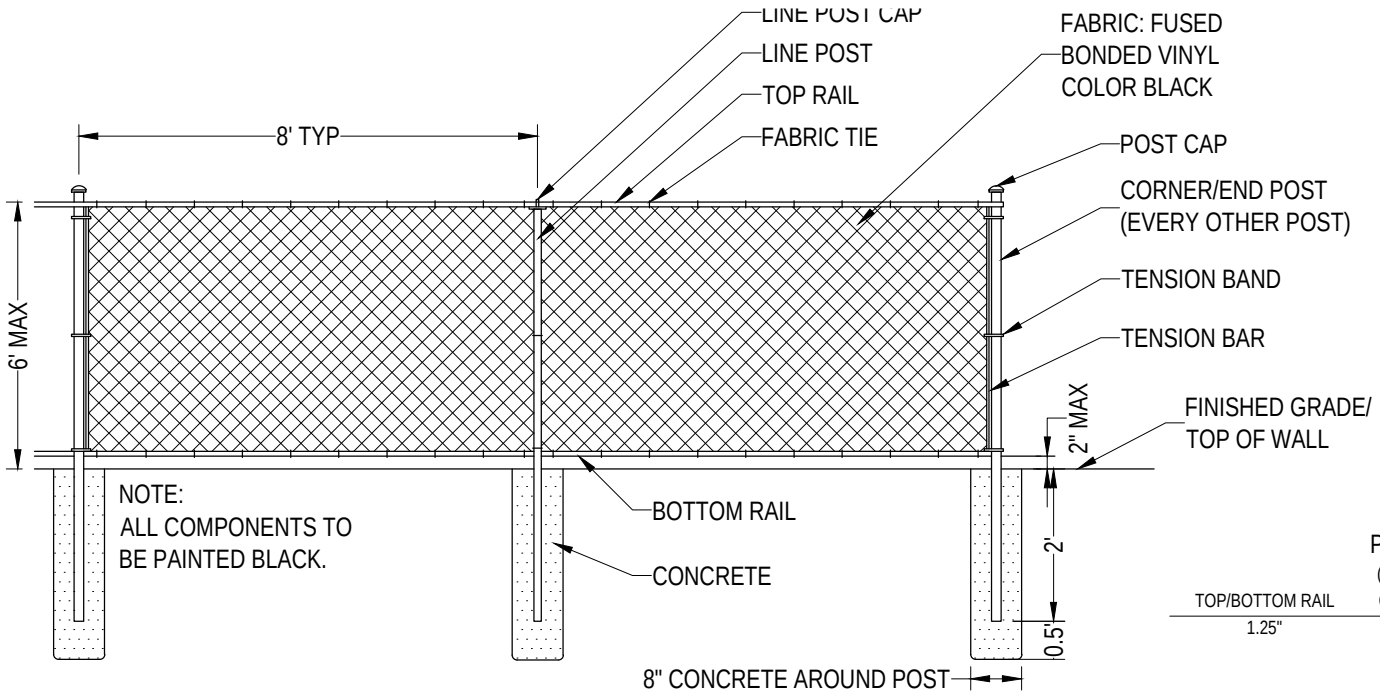

PIPE SCHEDULE
(ALL DIMENSION I.D.)

TOP/BOTTOM RAIL	CORNER/ END POST	LINE POST
1.25"	2.5"	2"

NOTES:

1. RAILING SHALL BE ALUMINUM PIPE RAIL OR APPROVED EQUIVALENT. INSTALLATION PER MANUFACTURER'S RECOMMENDATIONS.
2. SHOP DRAWINGS OF RAILING SHALL BE SUBMITTED FOR APPROVAL SHOWING COMPLETE DIMENSIONS AND DETAILS OF FABRICATION AND INCLUDING AN ERECTION DIAGRAM. MATERIALS BEING USED SHALL BE SPECIFIED IN THE SHOP DRAWINGS.
3. ALL ALUMINUM PARTS SHALL BE GIVEN A BLACK ANODIC COATING AT LEAST 0.0006 INCH THICK AND BE HOT WATER SEALED AND SHALL HAVE A UNIFORM FINISH.
4. WIRE FABRIC SHALL BE GIVEN A BLACK FUSED BONDED VINYL COATING TO MATCH FINISHED POSTS.
5. CUTTING SHALL BE DONE BY SAWING OR MILLING AND ALL CUTS SHALL BE TRUE AND SMOOTH. FLAME CUTTING WILL NOT BE PERMITTED.
6. ALL MATERIALS SHALL BE ADEQUATELY WRAPPED TO ENSURE SURFACE PROTECTION DURING HANDLING AND TRANSPORTATION TO THE JOB SITE.
7. ANY WELDING OF ALUMINUM SHALL BE IN ACCORDANCE WITH THE LATEST AASHTO STANDARD SPECIFICATIONS FOR STRUCTURAL SUPPORTS FOR HIGHWAY SIGNS, LUMINAIRES AND TRAFFIC SIGNALS.
8. RAILS, POSTS AND FORMED ELBOWS SHALL BE A.S.T.M B-241 OR B-429 ALLOY, 6063-T6 SCHEDULE 40 (STD. PIPE). BRACKETS, ENDCAPS AND OTHER FITTINGS SHALL BE A.S.T.M. 6063-T5. SPLICES AND REINFORCING SLEEVES SHALL BE DRAWN ALUMINUM TUBING 6063-T832.
9. TOP OF RAIL: 3 FEET 6 INCHES MIN FOR PEDESTRIAN USES
   4 FEET 6 INCHES MIN FOR COMBINED BICYCLE AND PEDESTRIAN USES

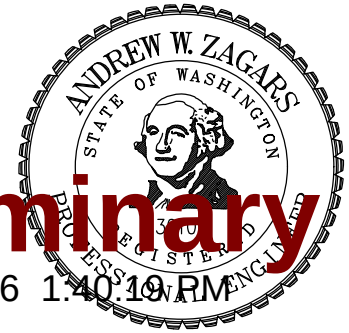

Preliminary

11/09/2016 1:40:19 PM

CITY OF SAMMAMISH
DEPARTMENT OF PUBLIC WORKS

CHAIN LINK FENCE

APPROVED BY
CITY ENGINEER _____ DATE _____

REV	DWN	CKD	DATE	FILE
	XXX	XXX	AUG-XX-2015	FIG03-18

REV. NO. X

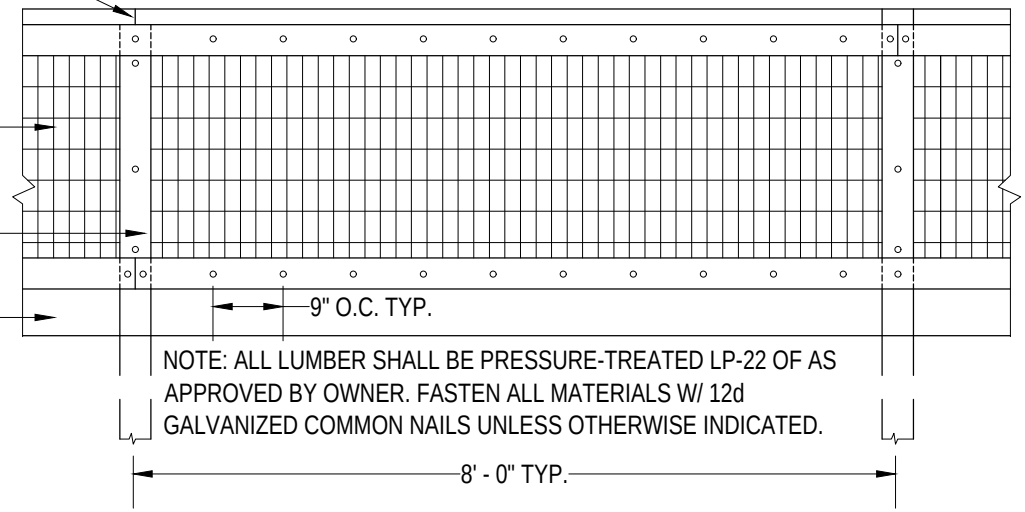

NOTE: ALL LUMBER SHALL BE PRESSURE-TREATED LP-22 OF AS APPROVED BY OWNER. FASTEN ALL MATERIALS W/ 12d GALVANIZED COMMON NAILS UNLESS OTHERWISE INDICATED.

ELEVATION

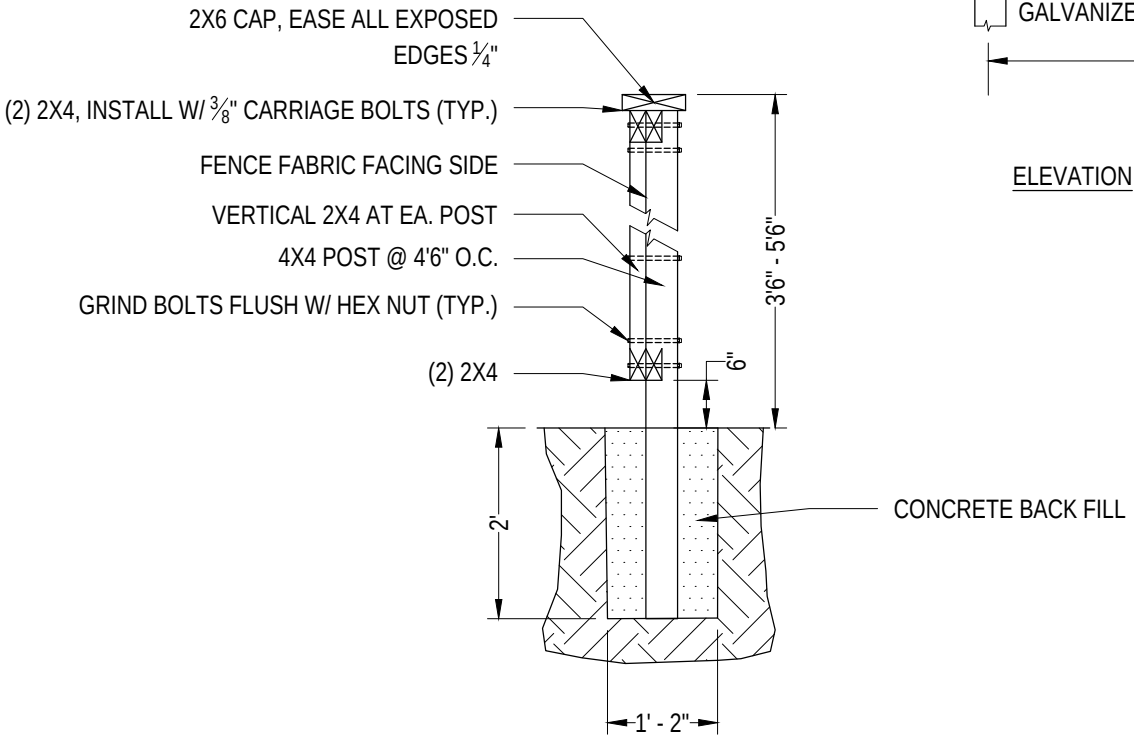

SECTION

NOTE: DIAGONAL BRACE RAILS (4x4) TO BE INSTALLED AT ALL END SECTIONS, TOP OF BRACE AT TOP OF END SECTION/CORNER.

Preliminary

11/09/2016 1:41:33 PM

CITY OF SAMMAMISH
DEPARTMENT OF PUBLIC WORKS

GREENBELT FENCE

APPROVED BY
CITY ENGINEER _____ DATE _____

REV	DWN	CKD	DATE	FILE
	XXX	XXX	AUG-XX-2015	FIG03-20

REV. NO. X

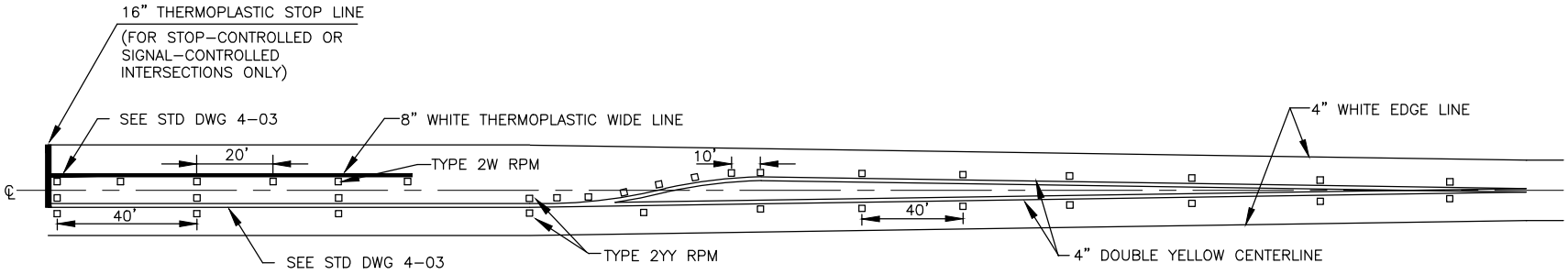

LEFT TURN LANE AND MEDIAN

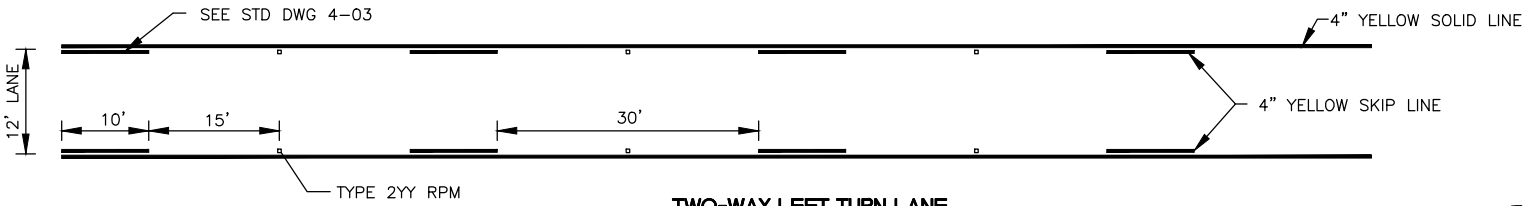

TWO-WAY LEFT TURN LANE

Preliminary

11/09/2016 1:41:38 PM

CITY OF SAMMAMISH
DEPARTMENT OF PUBLIC WORKS

CHANNELIZATION – LEFT TURN LANES

APPROVED BY
CITY ENGINEER _____ DATE _____

REV	DWN	CKD	DATE	FILE
	XXX	XXX	AUG-XX-2015	FIG04-01

REV. NO. X

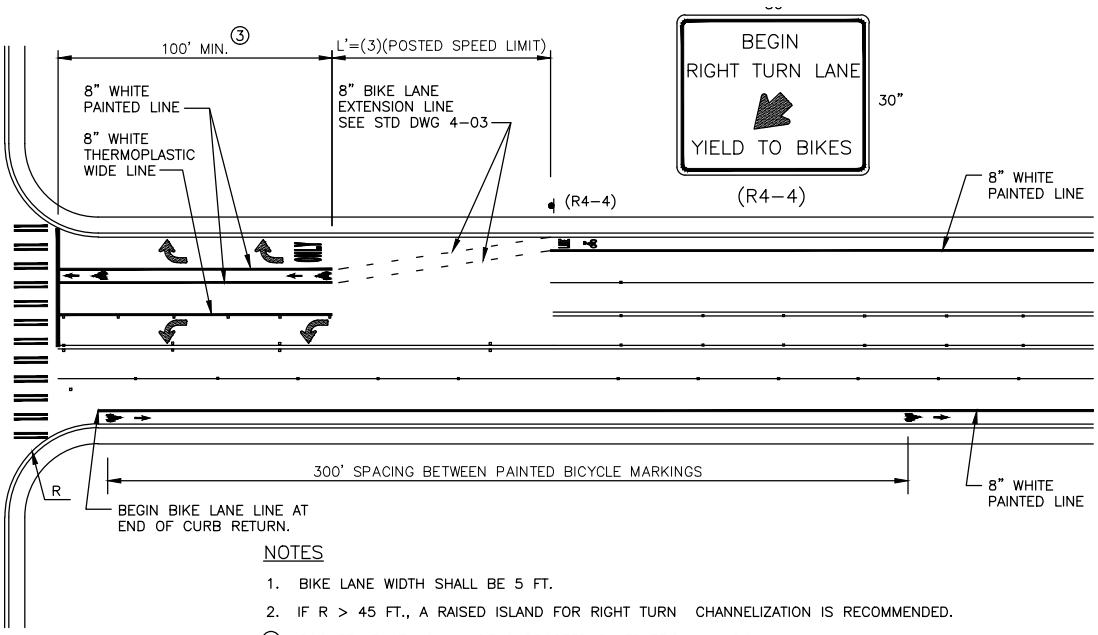

NOTES

1. BIKE LANE WIDTH SHALL BE 5 FT.
2. IF R > 45 FT., A RAISED ISLAND FOR RIGHT TURN CHANNELIZATION IS RECOMMENDED.
3. ③ POCKET LENGTH SHALL BE SUPPORTED BY TRAFFIC ANALYSIS
4. PLACE R3-18 SIGN IF THE BIKE LANE TERMINATES AT OR BEFORE THE APPROACHING INTERSECTION.
5. RIGHT TURN LANES, LEFT TURN LANES, AND TWO-WAY LEFT TURN LANES SHALL BE 12 FT. IN WIDTH.
6. TURN LANE ARROWS SHALL BEGIN AT THE START OF THE TURN LANE AND 40 FT. BEHIND THE STOP LINE. IF NEEDED LONGER LANES MAY BE REQUIRED. ADDITIONAL ARROWS 150 FT. APART.

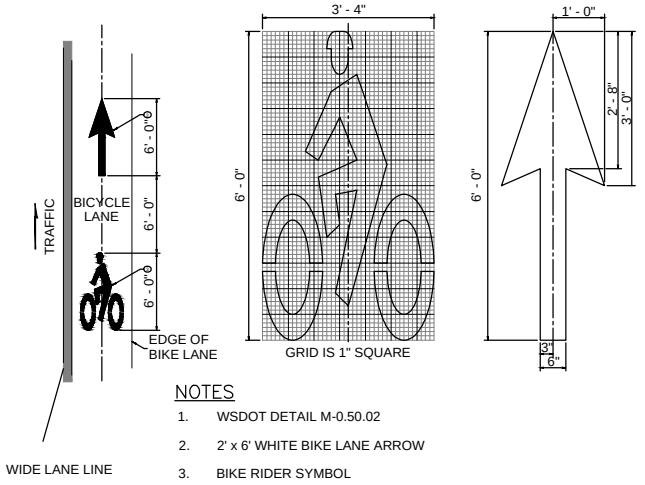

NOTES

1. WSDOT DETAIL M-0.50.02
2. 2' x 6' WHITE BIKE LANE ARROW
3. BIKE RIDER SYMBOL

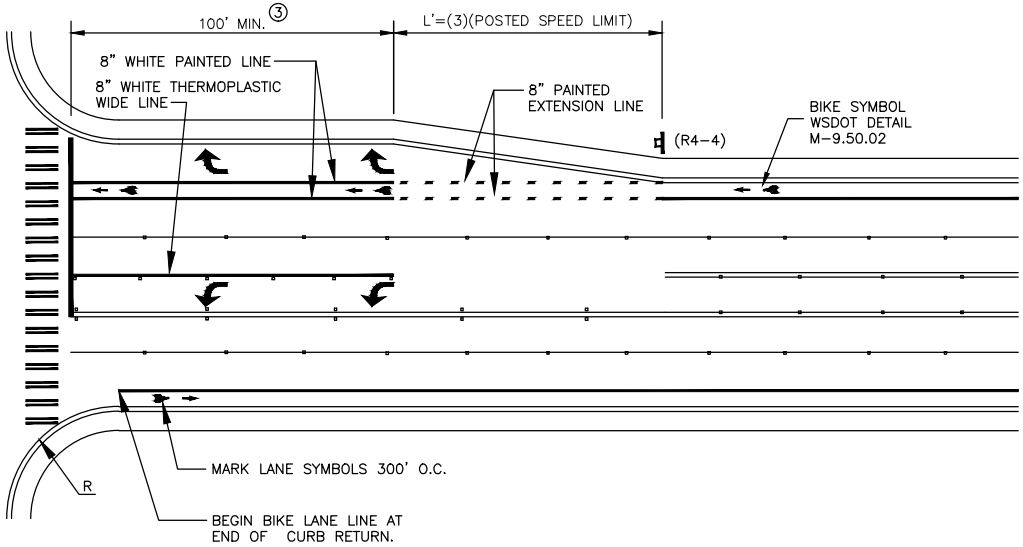

NOT TO SCALE

Preliminary

11/09/2016 1:41:40 PM

CITY OF SAMMAMISH
DEPARTMENT OF PUBLIC WORKS

CHANNELIZATION – VEHICLE AND BICYCLES

APPROVED BY
CITY ENGINEER _____ DATE _____

REV	DWN	CKD	DATE	FILE
	XXX	XXX	AUG-XX-2015	FIG04-02

REV. NO. X

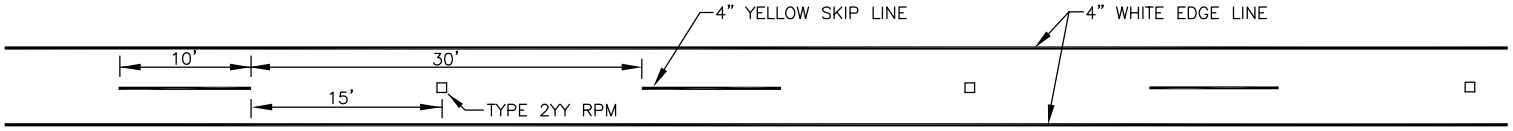

SINGLE LANE TWO-WAY TRAFFIC

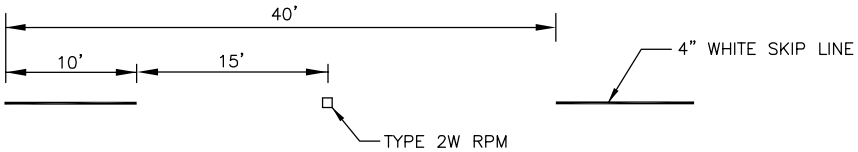

LANE SEPARATION

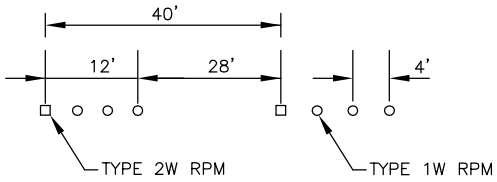

TRAVEL DIRECTION
ALTERNATE LANE MARKINGS

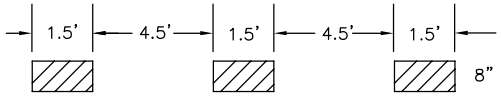

LANE EXTENSION LINE

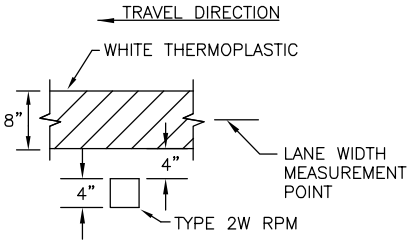

WIDE LINE

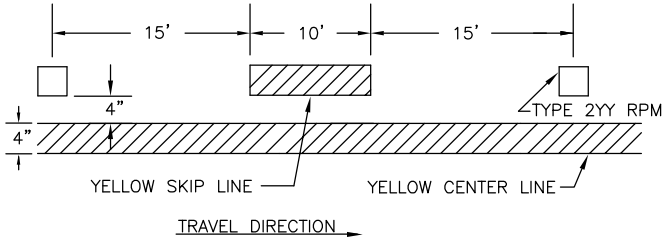

TWO-WAY LEFT TURN LANE

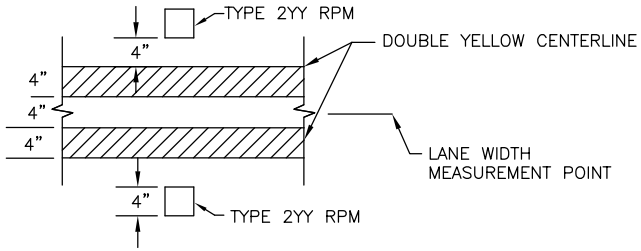

CENTERLINE

Preliminary

11/09/2016 11:41:45 PM

CITY OF SAMMAMISH
DEPARTMENT OF PUBLIC WORKS

PAVEMENT MARKINGS

APPROVED BY
CITY ENGINEER _____ DATE _____

REV	DWN	CKD	DATE	FILE
	XXX	XXX	AUG-XX-2015	FIG04-03A

REV. NO. X

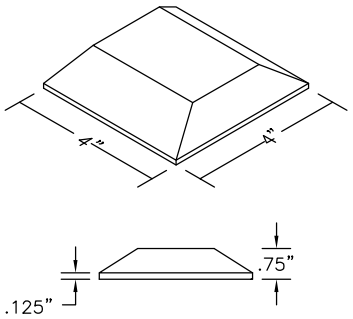

TYPE 2 RPM

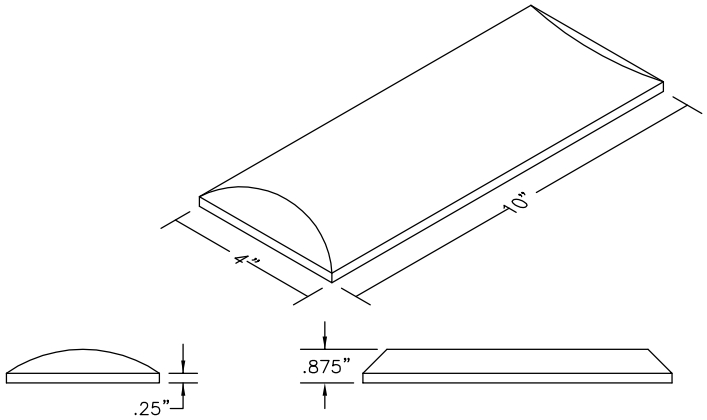

TYPE 3 RPM

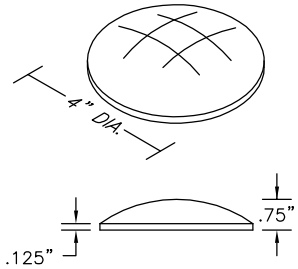

TYPE 1 RPM

RAISED PAVEMENT MARKER COLORS	
TYPE 1W	NONREFLECTORIZED WHITE
TYPE 1Y	NONREFLECTORIZED YELLOW
TYPE 2W	REFLECTORIZED WHITE – ONE SIDE ONLY
TYPE 2Y	REFLECTORIZED YELLOW – ONE SIDE ONLY
TYPE 2YY	REFLECTORIZED YELLOW – BOTH SIDES

Preliminary
11/09/2016 1:41:49 PM

CITY OF SAMMAMISH
DEPARTMENT OF PUBLIC WORKS

RAISED PAVEMENT MARKERS

APPROVED BY
CITY ENGINEER _____ DATE _____

REV	DWN	CKD	DATE	FILE
	XXX	XXX	AUG-XX-2015	FIG04-03B

REV. NO. X

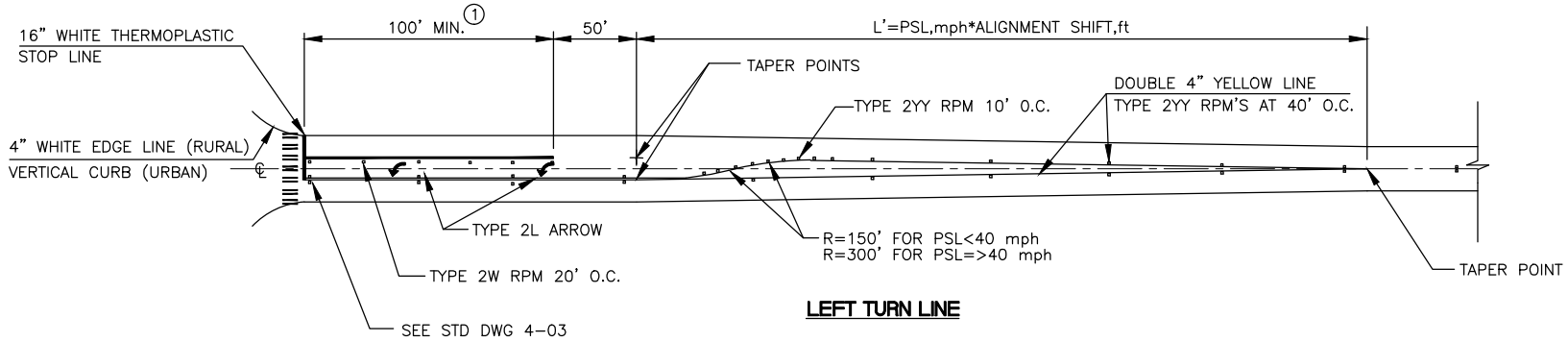

LEFT TURN LINE

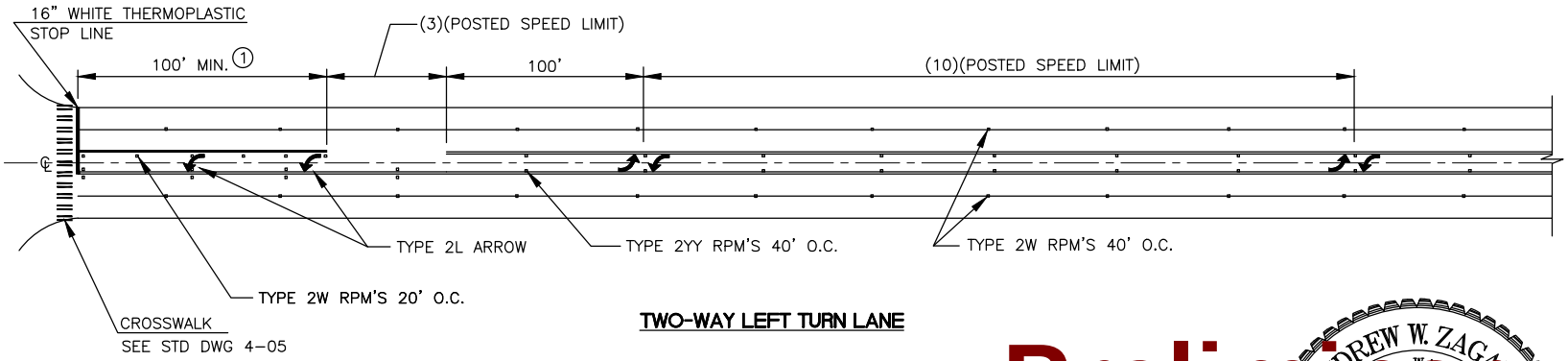

TWO-WAY LEFT TURN LANE

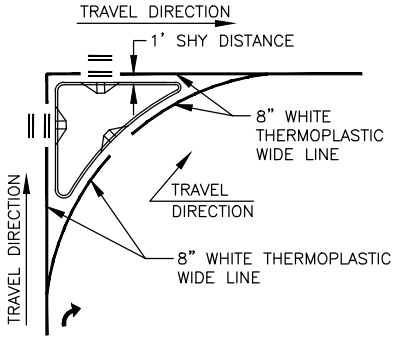

ISLAND LINE DETAIL
(RAISED ISLAND IS OPTIONAL)

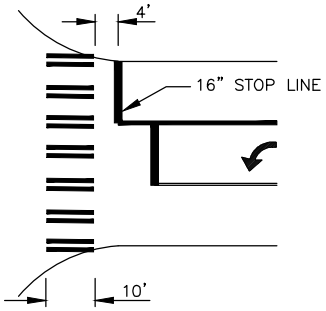

CROSSWALK AND STOP LINE

NOTES

1. POCKET LENGTHS SHALL BE SUPPORTED BY TRAFFIC ANALYSIS.

PSL = POSTED SPEED LIMIT

Preliminary
11/09/2016 1:41:53 PM

CITY OF SAMMAMISH
DEPARTMENT OF PUBLIC WORKS

INTERSECTION APPROACH STRIPING

APPROVED BY
CITY ENGINEER _____ DATE _____

REV	DWN	CKD	DATE	FILE
	XXX	XXX	AUG-XX-2015	FIG04-04

REV. NO. X

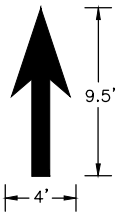

TYPE 1
THRU ARROW

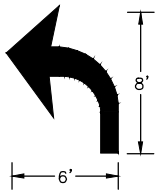

TYPE 2L
LEFT TURN ARROW

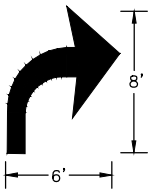

TYPE 2R
RIGHT TURN ARROW

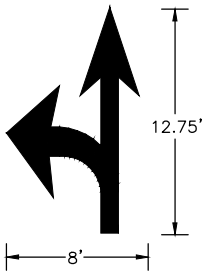

TYPE 3L
LEFT/THRU ARROW

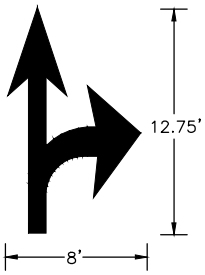

TYPE 3R
RIGHT/THRU ARROW

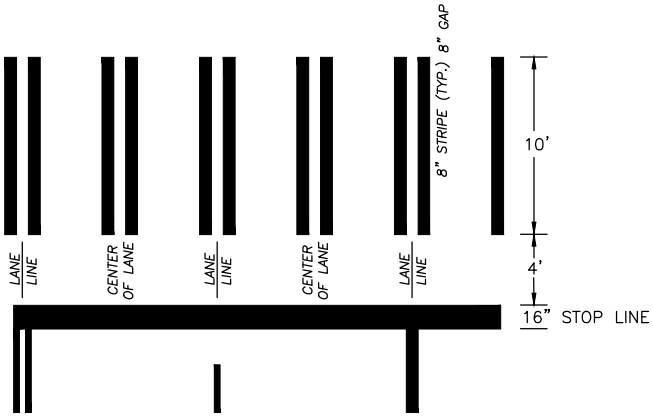

CROSSWALK STRIPING

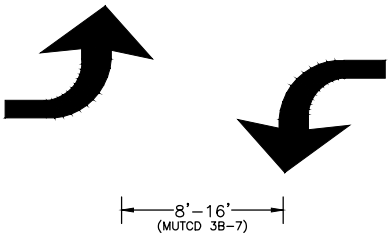

TWO WAY LEFT TURN LANE
ARROW SPACING

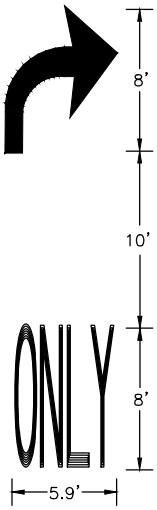

DROP LANE

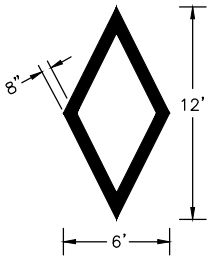

HIGH OCCUPANCY VEHICLE (HOV)

Preliminary
11/09/2016 1:41:57 PM

NOTES

1. ALL PAVEMENT SYMBOLS SHALL BE THERMOPLASTIC.

CITY OF SAMMAMISH
DEPARTMENT OF PUBLIC WORKS

PAVEMENT SYMBOLS

APPROVED BY
CITY ENGINEER _____ DATE _____

REV	DWN	CKD	DATE	FILE
	XXX	XXX	AUG-XX-2015	FIG04-05

REV. NO. X

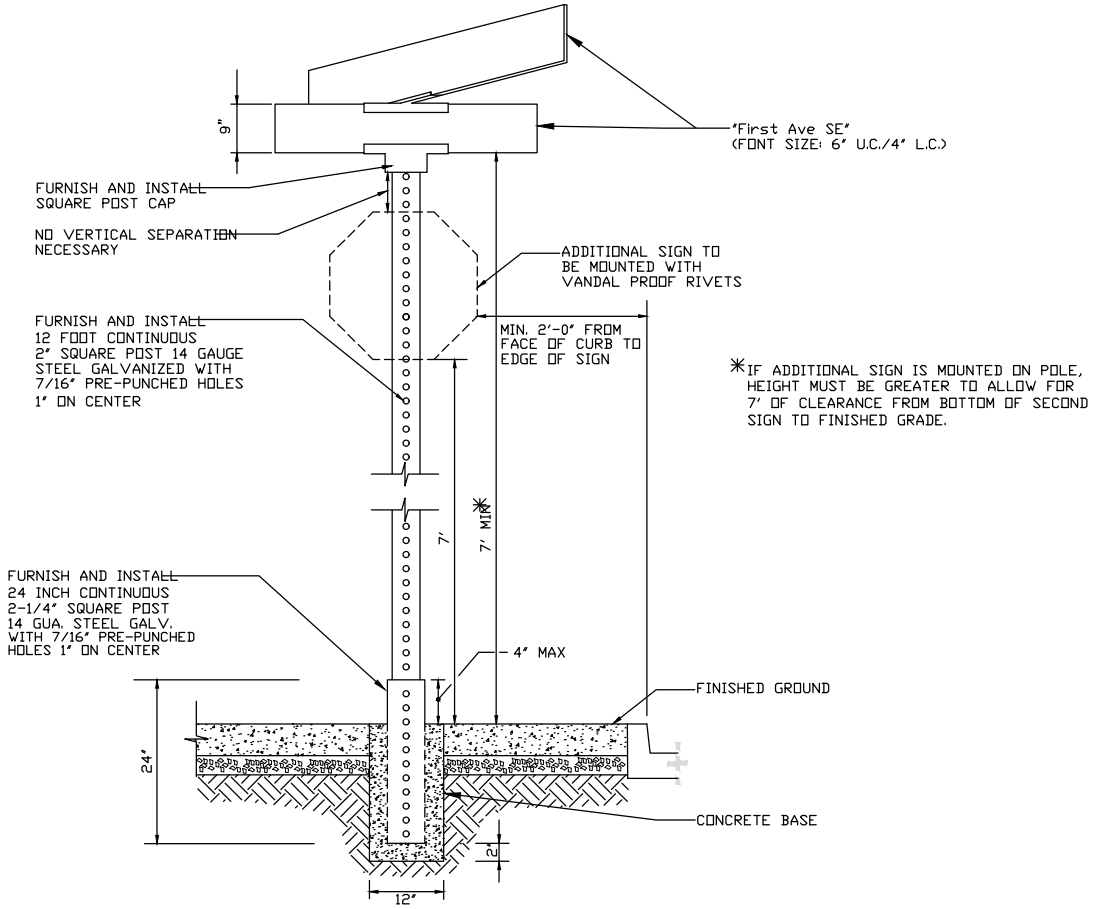

STREET SIGN INSTALLATION DETAIL

NOT TO SCALE

NOTES:

1. ALL EXISTING SIGNS THAT ARE TO BE RELOCATED SHALL BE INSTALLED ON NEW POSTS AND HARDWARE.
2. 2" TELESPARE GALVANIZED POSTS
3. 2 1/4" TELESPARE GALVANIZED ANCHORS, 24" LONG
4. SET ANCHORS 20" DEEP, WRAP ANCHORS AND SET IN CONCRETE. BOLTS TO BE 2" ABOVE FINISHED GRADE
5. SIGNS TO BE V.I.P. (DIAMOND GRADE)
6. SIGNS TO BE ATTACHED WITH VANDAL PROOF RIVETS
7. D-3'S TO BE E.G. BACKGROUND DIAMOND GRADE LETTERING
8. D-3'S TO BE MOUNTED WITH ALUMINUM CAPS AND CROSS BRACKETS
9. WHITE LEGEND ON GREEN BACKGROUND

Preliminary

11/09/2016 1:42:00 PM

CITY OF SAMMAMISH
DEPARTMENT OF PUBLIC WORKS

STREET SIGN INSTALLATION

APPROVED BY
CITY ENGINEER _____ DATE _____

REV	DWN	CKD	DATE	FILE
	XXX	XXX	AUG-XX-2015	FIG04-06

REV. NO. X

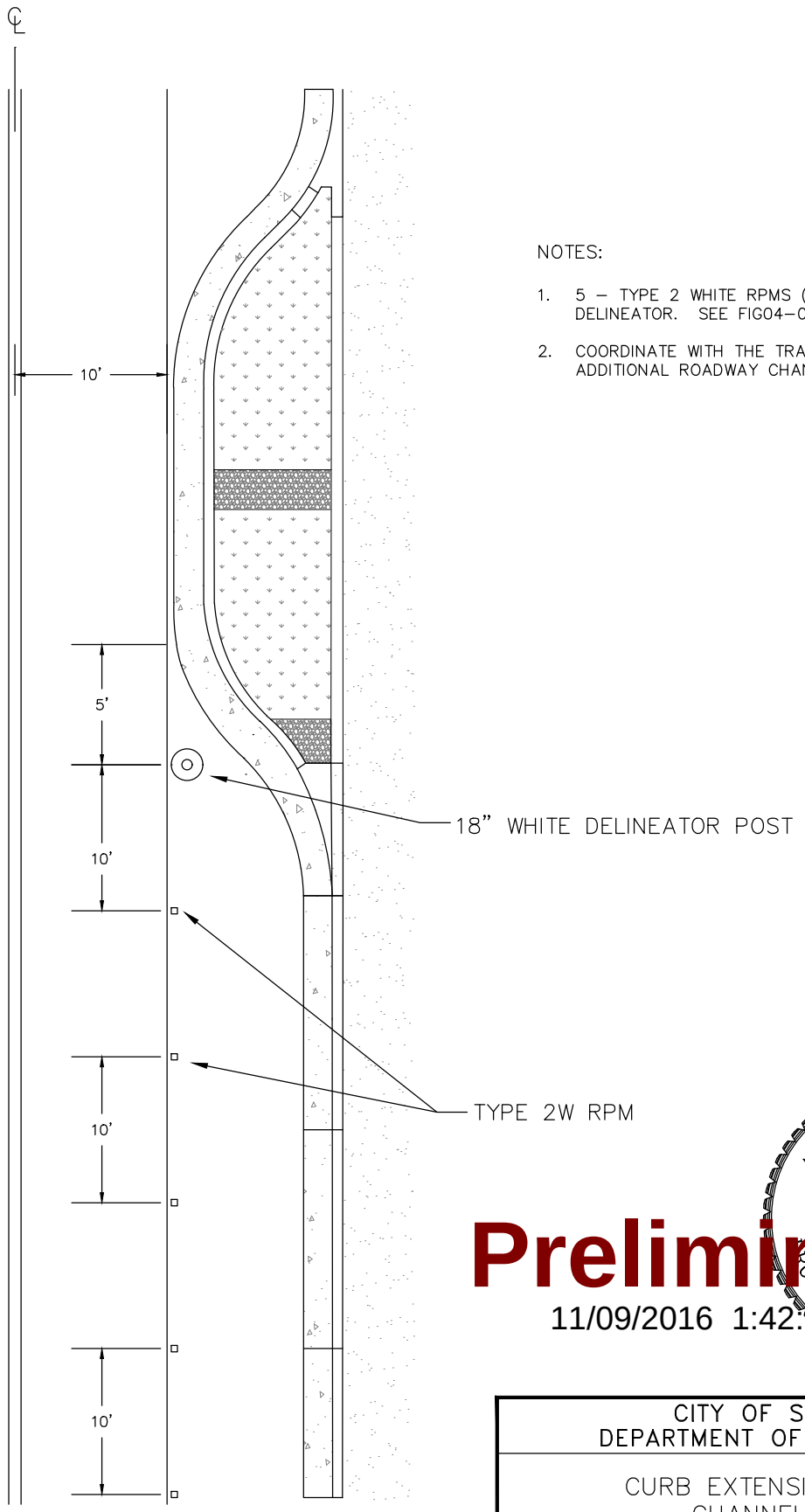

NOTES:

1. 5 – TYPE 2 WHITE RPMS (10' O.C.) FOLLOWING THE DELINEATOR. SEE FIG04–03B FOR RMP DIMENSIONS.
2. COORDINATE WITH THE TRAFFIC ENGINEER ABOUT ADDITIONAL ROADWAY CHANNELIZATION.

– NOT TO SCALE –

Preliminary
11/09/2016 1:42:04 PM

ANDREW W. ZAGARS
STATE OF WASHINGTON
REGISTERED PROFESSIONAL ENGINEER

CITY OF SAMMAMISH
DEPARTMENT OF PUBLIC WORKS

CURB EXTENSION/CHICANE CHANNELIZATION

APPROVED BY
CITY ENGINEER _____ DATE _____

REV	DWN	CKD	DATE	FILE
	LG		NOV–9–2016	FIG04–07

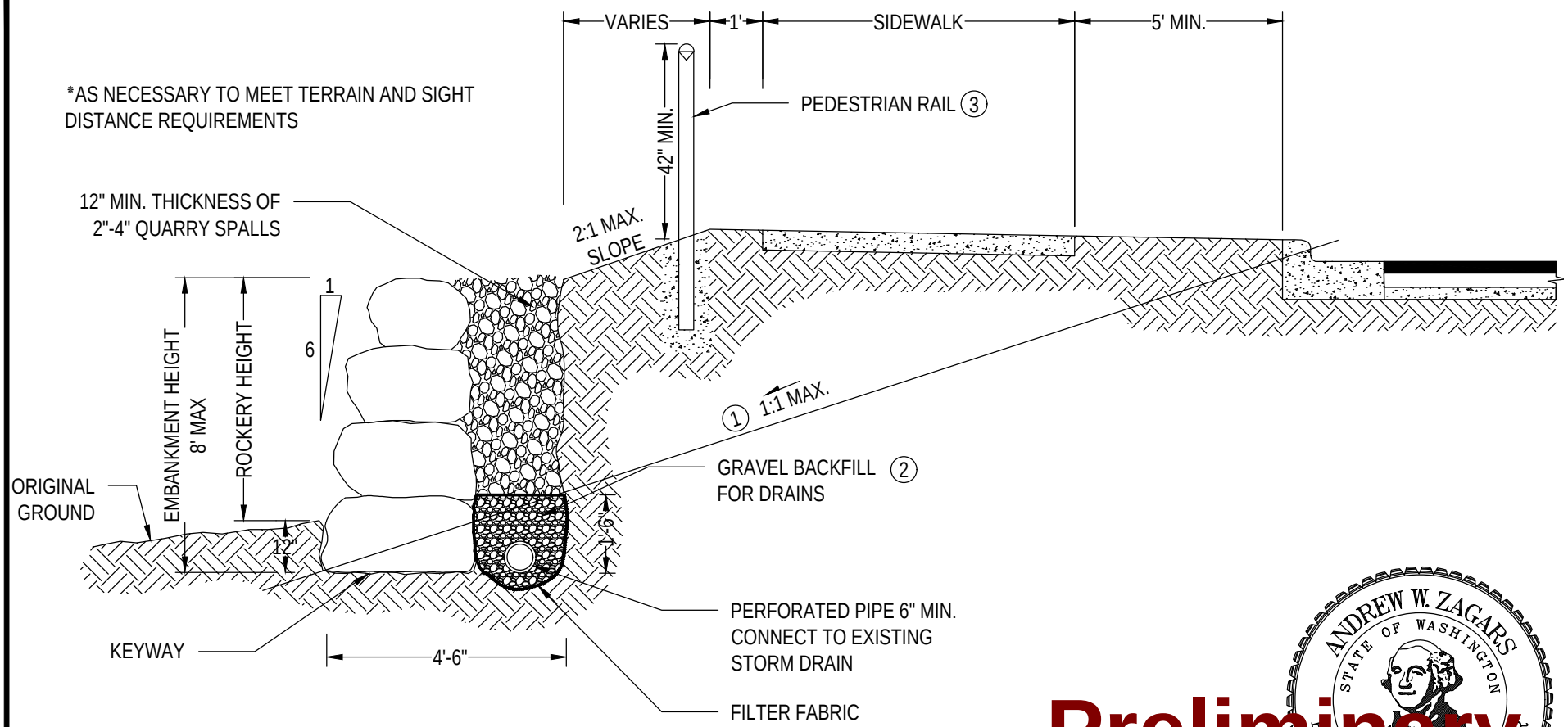

Preliminary

11/09/2016 1:42:06 PM

NOTES:

1. FLATTER SLOPE MAY BE REQUIRED IN LESS STABLE SOIL.
2. SEE WSDOT/APWA STD SPECIFICATION 9-03.12[4].
3. A PEDESTRIAN RAIL, PER STD DWG 3-15, IS REQUIRED WHEN ROCKERY HEIGHT IS 2'-6" OR GREATER. THE USAGE OF A CHAIN LINK FENCE MAY BE APPROVED.
4. TRAFFIC BARRIERS MAY BE REQUIRED ON ROADS WITH SPEED LIMITS OF 30 MPH OR GREATER, WHERE ROCKERY HEIGHTS EXCEED 6'. SEE CHAPTER 1610 OF THE CURRENT WSDOT DESIGN MANUAL.
5. ALL ROCKERIES OVER 4' IN HEIGHT ON PUBLIC OR PRIVATE PROPERTY SHALL REQUIRE STRUCTURAL REVIEW.

CITY OF SAMMAMISH
DEPARTMENT OF PUBLIC WORKS

ROCK FACING – FILL SECTION

APPROVED BY
CITY ENGINEER _____ DATE _____

REV	DWN	CKD	DATE	FILE
	XXX	XXX	AUG-XX-2015	FIG05-01

REV. NO. X

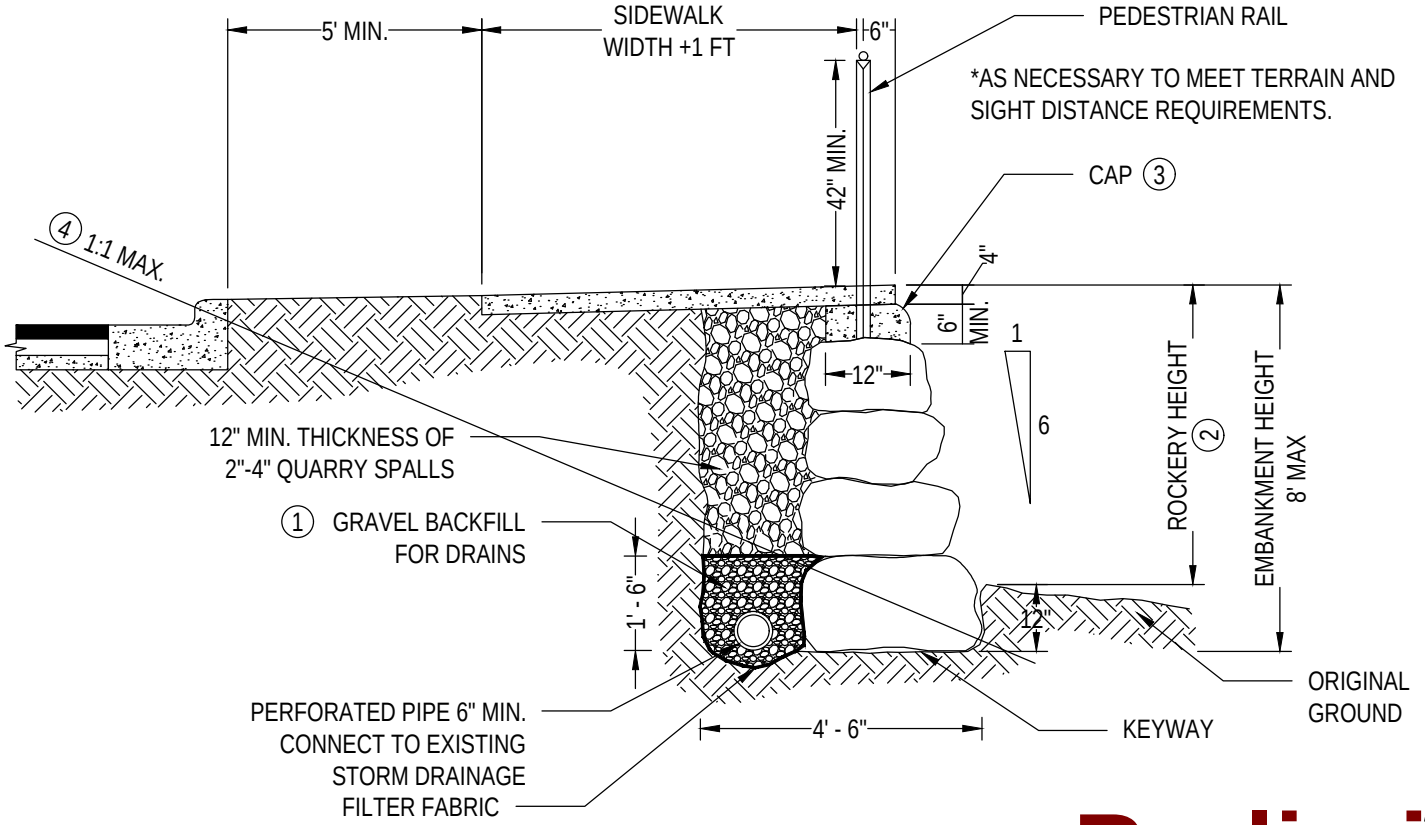

Preliminary

11/09/2016 1:42:09 PM

NOTES:

1. WSDOT/APWA STD SPECIFICATION 9-03.12[4].
2. A PEDESTRIAN RAIL, PER STD DWG 3-15, IS REQUIRED WHEN ROCKERY HEIGHT IS 2'-6"' OR GREATER. THE USAGE OF A CHAIN LINK FENCE MAY BE APPROVED.
3. CAP SHALL BE CONCRETE CLASS 3000.
4. FLATTER SLOPE MAY BE REQUIRED IN LESS STABLE SOILS.
5. TRAFFIC BARRIERS MAY BE REQUIRED ON ROADS WITH SPEED LIMITS OF 30 MPH OR GREATER, WHERE HEIGHTS EXCEED 6'. SEE CHAPTER 1610 OF THE CURRENT WSDOT DESIGN MANUAL.
6. ALL ROCKERIES OVER 4' IN HEIGHT ON PUBLIC OR PRIVATE PROPERTY SHALL REQUIRE STRUCTURAL REVIEW.

CITY OF SAMMAMISH
DEPARTMENT OF PUBLIC WORKS

ROCK FACING UNDER SIDEWALK

APPROVED BY
CITY ENGINEER _____ DATE _____

REV	DWN	CKD	DATE	FILE
	XXX	XXX	AUG-XX-2015	FIG05-02

REV. NO. X

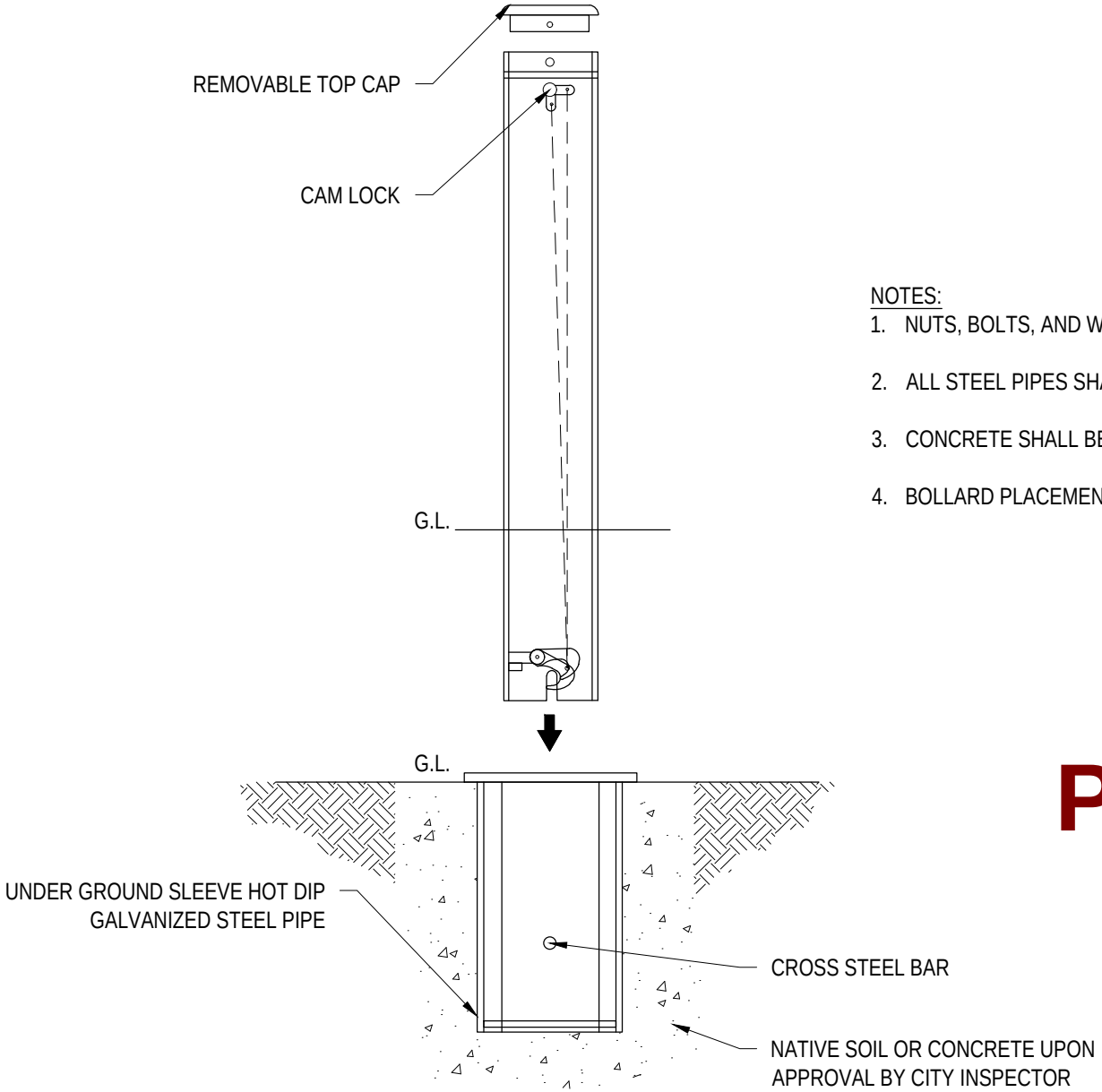

NOTES:

1. NUTS, BOLTS, AND WASHERS CONFORM TO ASTM A307.
2. ALL STEEL PIPES SHALL BE GALVANIZED.
3. CONCRETE SHALL BE CLASS C.
4. BOLLARD PLACEMENT SHALL BE APPROVED BY THE DIRECTOR OR DESIGNEE.

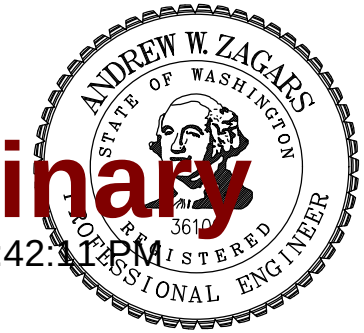

Preliminary

11/09/2016 1:42:11PM

CITY OF SAMMAMISH DEPARTMENT OF PUBLIC WORKS			
BOLLARDS			
APPROVED BY CITY ENGINEER _____ DATE _____			
REV	DWN XXX	CKD XXX	DATE AUG-XX-2015	FILE FIG05-03

REV. NO. X

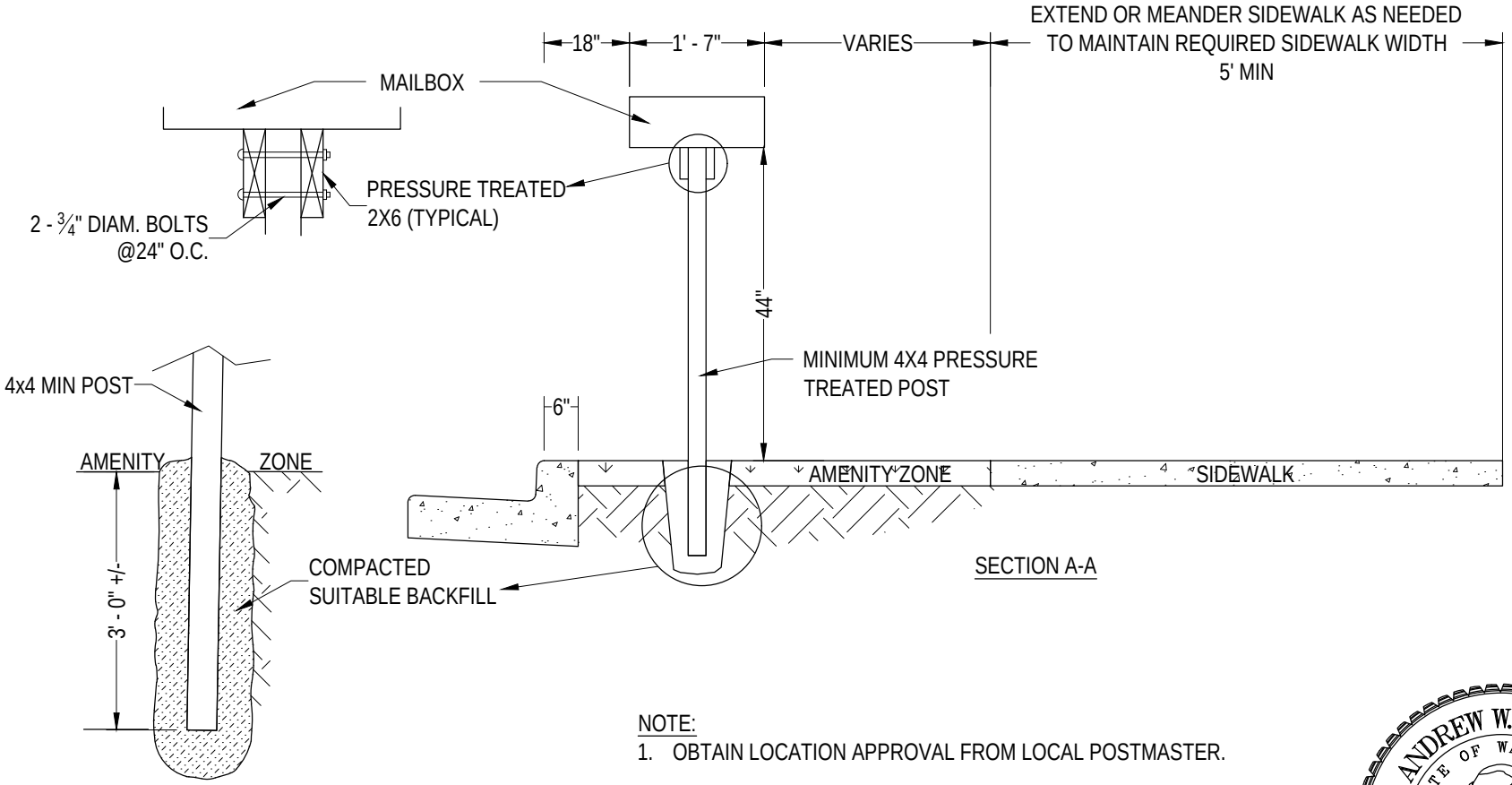

NOTE:

1. OBTAIN LOCATION APPROVAL FROM LOCAL POSTMASTER.

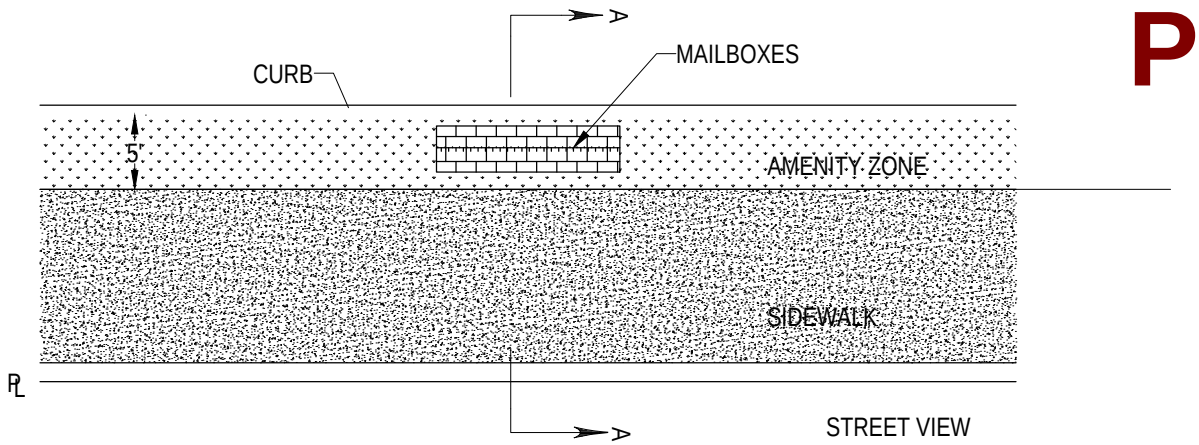

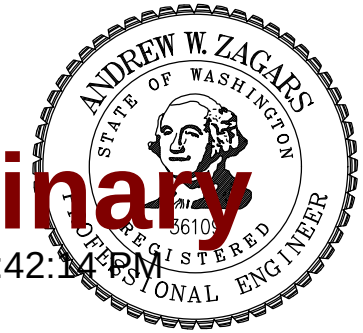

Preliminary

11/09/2016 1:42:14 PM

CITY OF SAMMAMISH
DEPARTMENT OF PUBLIC WORKS

MAILBOX STAND NON–ARTERIAL

APPROVED BY
CITY ENGINEER _____ DATE _____

REV	DWN	CKD	DATE	FILE
	XXX	XXX	AUG–XX–2015	FIG05–04

REV. NO. X

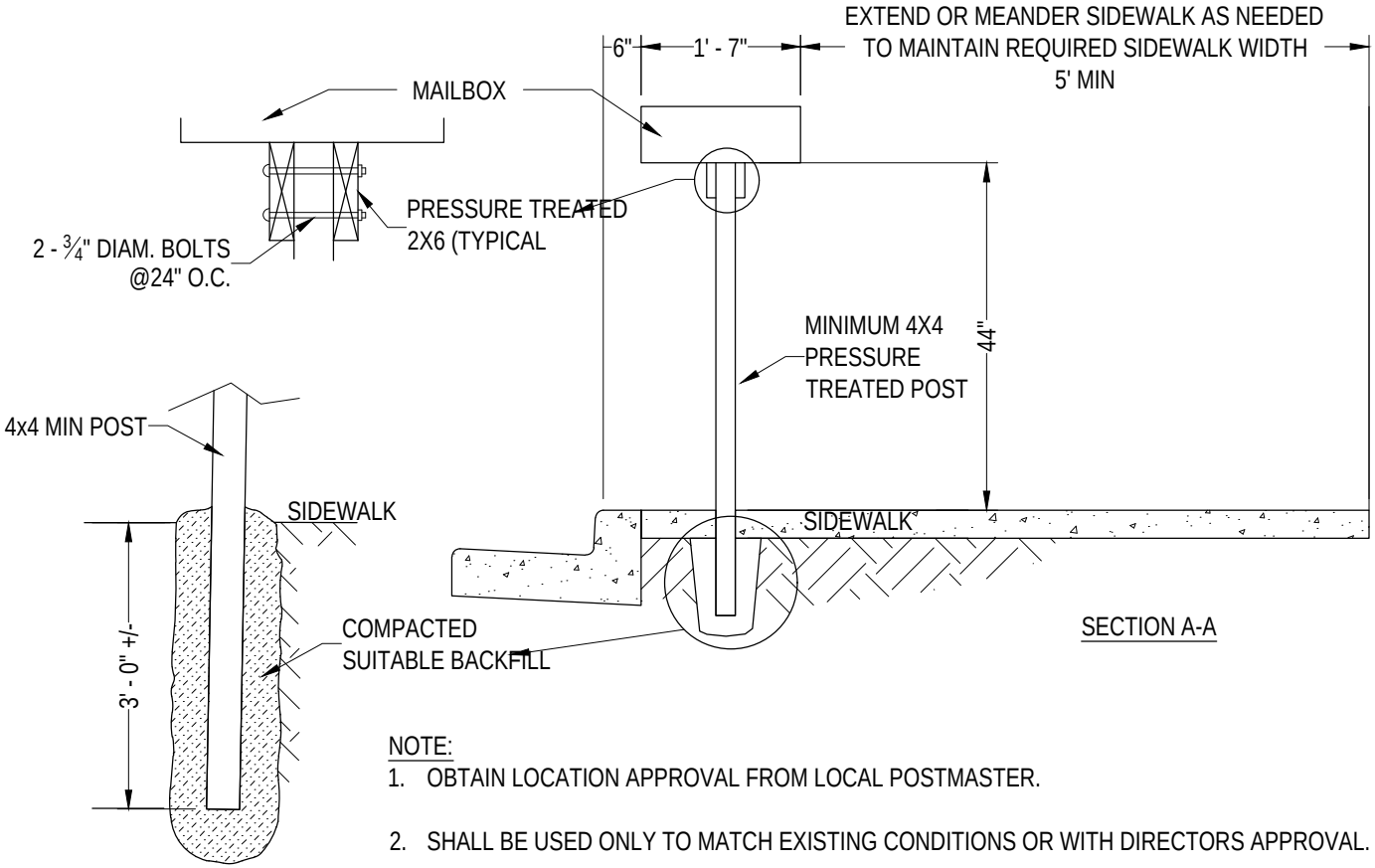

NOTE:

1. OBTAIN LOCATION APPROVAL FROM LOCAL POSTMASTER.
2. SHALL BE USED ONLY TO MATCH EXISTING CONDITIONS OR WITH DIRECTORS APPROVAL.

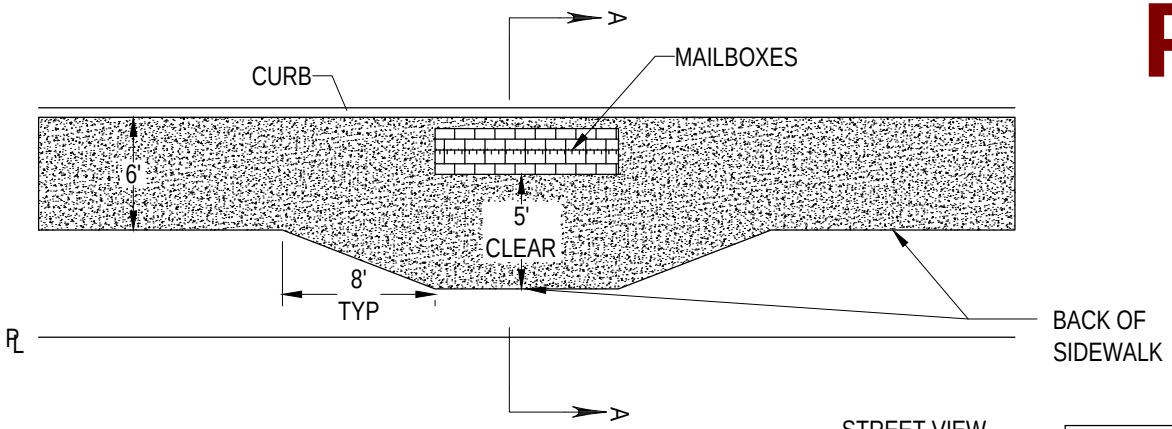

STREET VIEW

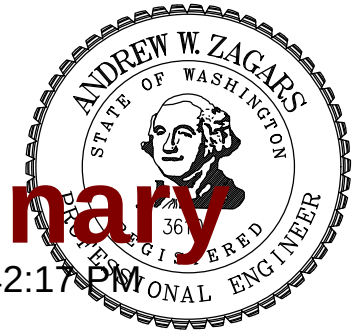

Preliminary

11/09/2016 1:42:17 PM

CITY OF SAMMAMISH
DEPARTMENT OF PUBLIC WORKS

MAILBOX STAND WITHOUT AMENITY ZONE

APPROVED BY
CITY ENGINEER _____ DATE _____

REV	DWN	CKD	DATE	FILE
	XXX	XXX	AUG-XX-2015	FIG05-05

REV. NO. X

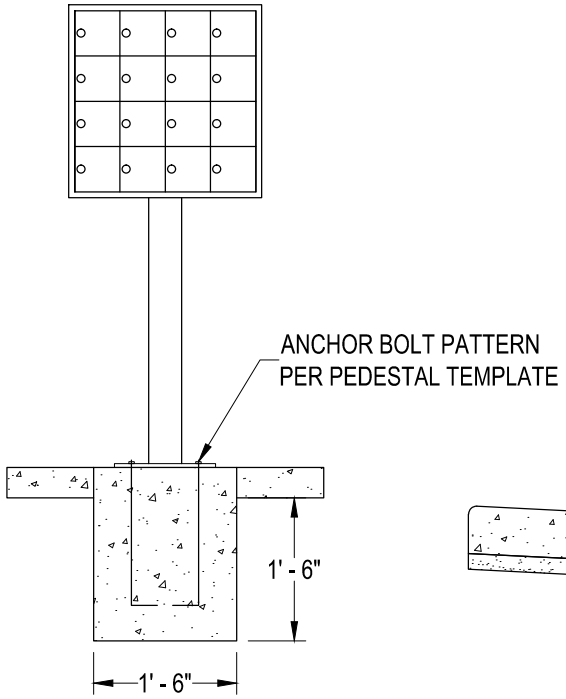

FRONT VIEW

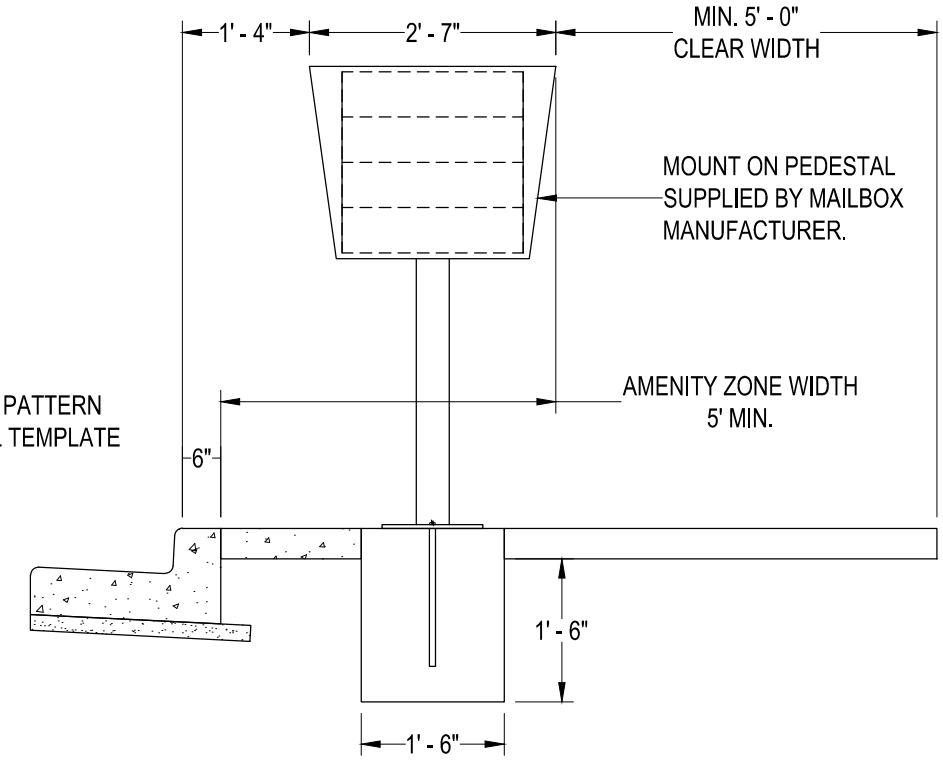

SIDE VIEW

Preliminary
11/09/2016 1:42:19 PM

NOTES:

1. OBTAIN LOCATION APPROVAL FROM LOCAL POSTMASTER.
2. USE PEDESTAL MOUNTED 4C MAILBOX.

CITY OF SAMMAMISH
DEPARTMENT OF PUBLIC WORKS

NEIGHBORHOOD DELIVERY & COLLECTION BOX UNIT INSTALLATION

APPROVED BY
CITY ENGINEER _____ DATE _____

REV	DWN	CKD	DATE	FILE
	XXX	XXX	AUG-XX-2015	FIG05-06

REV. NO. X

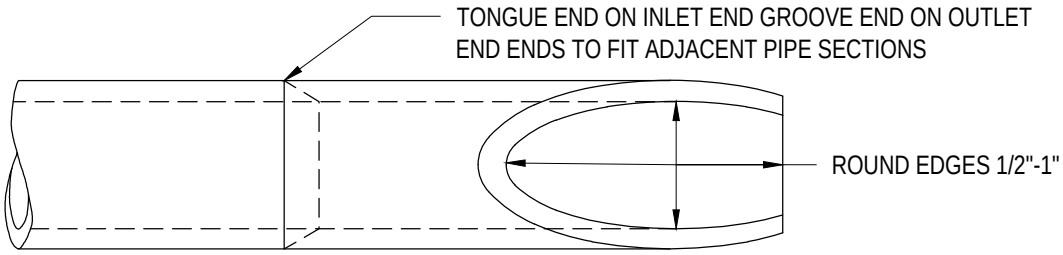

PLAN

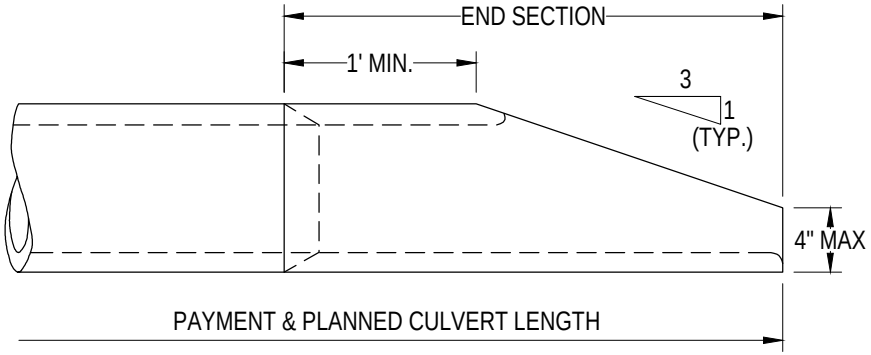

ELEVATION CONCRETE PIPE

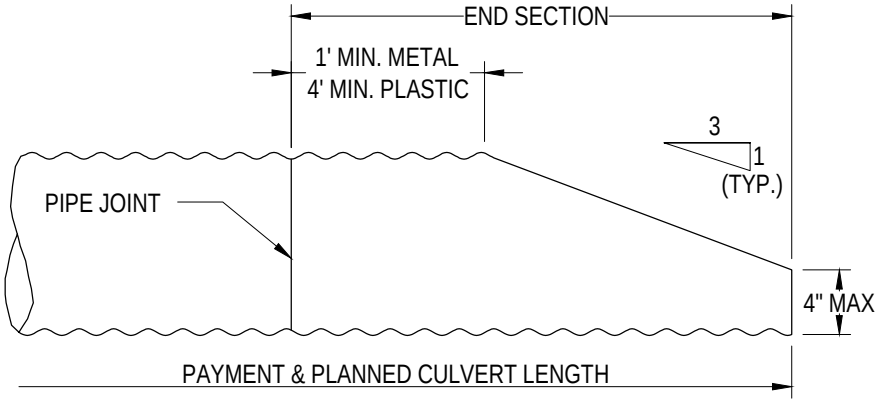

METAL & PLASTIC PIPE

NOTES:

1. SIDE SLOPE SHALL BE WARPED TO MATCH THE BEVELED PIPE END. WHEN CULVERT IS ON SKEW, BEVELED END SHALL BE ROTATED TO CONFORM TO SLOPE. IF SLOPE DIFFERS FROM 3:1, PIPE SHALL BE BEVELED TO MATCH SLOPE.
2. TRASH RACK MAY BE REQUIRED BY DIRECTOR OR DESIGNEE. (SEE STD DWG 7-02 FOR DETAILS).
3. INLET/OUTLET PROTECTION SHALL BE REQUIRED.

Preliminary

11/09/2016 1:42:22 PM

CITY OF SAMMAMISH
DEPARTMENT OF PUBLIC WORKS

BEVELED END PIPE SECTION

APPROVED BY
CITY ENGINEER _____ DATE _____

REV	DWN	CKD	DATE	FILE
	XXX	XXX	AUG-XX-2015	FIG07-01

REV. NO. X

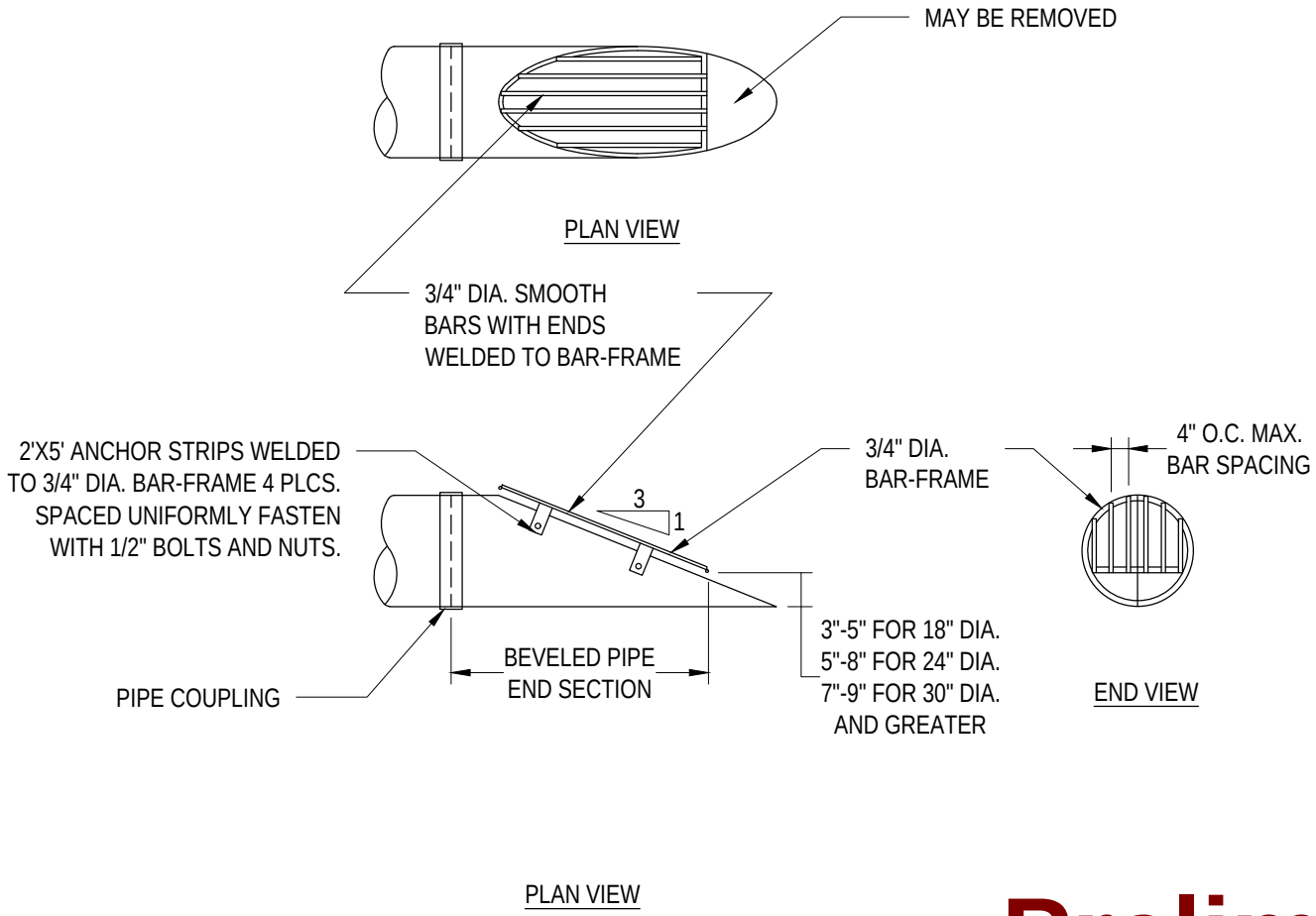

Preliminary
11/09/2016 1:42:24 PM

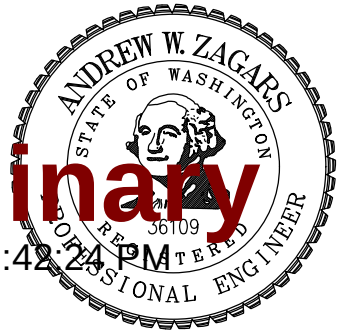

NOTES:

1. CMP END-SECTION SHOWN. FOR CONCRETE PIPE BEVELED END-SECTION, SEE STD DWG 7-01.
2. ALL PARTS MUST BE ALUMINUM OR STAINLESS STEEL.
3. TRASH RACKS REQUIRED ON ALL PIPES 18" TO 36" IN DIAMETER ENTERING A CLOSED SYSTEM.

CITY OF SAMMAMISH
DEPARTMENT OF PUBLIC WORKS

TRASH RACK
(DEBRIS CAGE) – PIPE END

APPROVED BY
CITY ENGINEER _____ DATE _____

REV	DWN	CKD	DATE	FILE
	XXX	XXX	AUG-XX-2015	FIG07-02

REV. NO. X

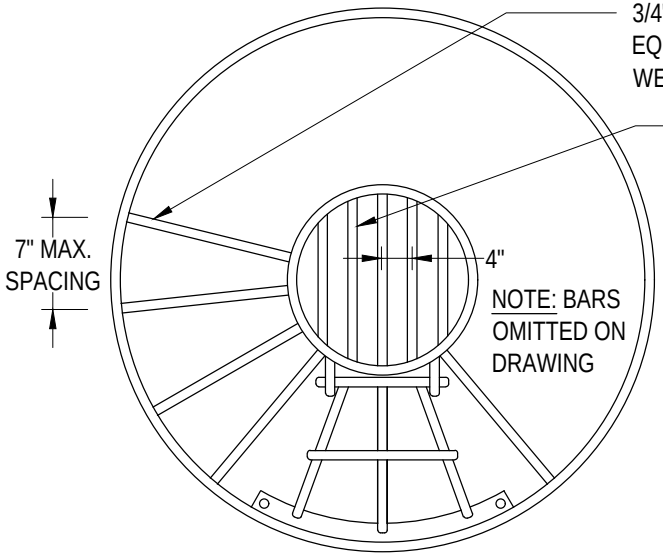

PLAN

NOTES:

1. ALL STEEL IN PLATES, BARS AND BANDS SHALL CONFORM TO THE REQUIREMENTS OF ASTM A38.
2. DEBRIS CAGE SHALL BE HOT-DIP GALVANIZED IN ACCORDANCE WITH ASTM A123 (AASHTO M111).

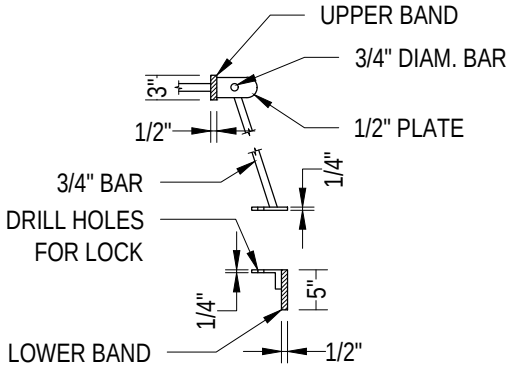

ENTRY GATE DETAIL

CB	INNER DIAM.
48"	58"
54"	65"
60"	72"
72"	86"
96"	114"

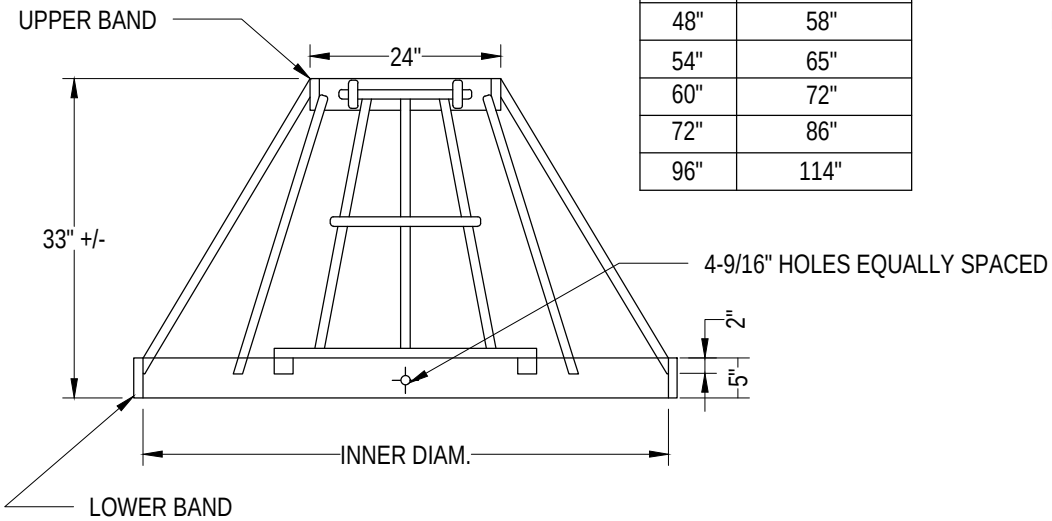

ELEVATION

Preliminary

11/09/2016 1:42:26 PM

CITY OF SAMMAMISH
DEPARTMENT OF PUBLIC WORKS

TRASH RACK
(DEBRIS CAGE) – CONICAL

APPROVED BY
CITY ENGINEER _____ DATE _____

REV	DWN	CKD	DATE	FILE
	XXX	XXX	AUG-XX-2015	FIG07-03

REV. NO. X

FRAME AND GRATE
SEE STD DWGS 7-16
& 7-18 FOR DETAILS

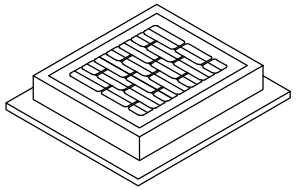

6" RISER SECTION

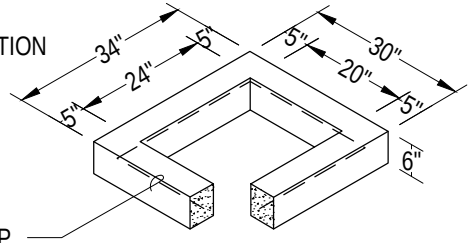

1 #3 BAR HOOP

12" RISER SECTION

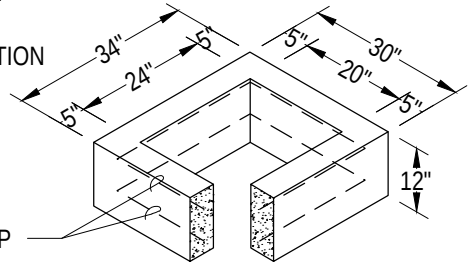

2 #3 BAR HOOP

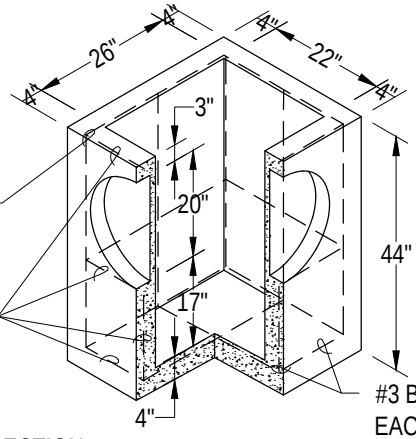

#3 BAR EACH CORNER

#3 BAR EACH SIDE

#3 BAR EACH WAY

PRECAST BASE SECTION
(MEASUREMENT AT THE
TOP OF THE BASE)

NOTES:

1. CATCH BASINS SHALL BE CONSTRUCTED IN ACCORDANCE WITH ASTM C478 (AASHTO M 199) & C890 UNLESS OTHERWISE SHOWN ON PLANS OR NOTED IN THE WSDOT/APWA STANDARD SPECIFICATIONS.

2. AS AN ACCEPTABLE ALTERNATIVE TO REBAR, WELDED WIRE FABRIC HAVING A MIN. AREA OF 0.12 SQUARE INCHES PER FOOT MAY BE USED. WELDED WIRE FABRIC SHALL COMPLY TO ASTM A497 (AASHTO M 221). WIRE FABRIC COMPLY TO ASTM A497 (AASHTO M 221). WIRE FABRIC SHALL NOT BE PLACED IN KNOCKOUTS.

3. ALL REINFORCED CAST-IN-PLACE CONCRETE SHALL BE CLASS 4000.

4. PRECAST BASES SHALL BE FURNISHED WITH CUTOUTS OR KNOCKOUTS. KNOCKOUTS SHALL HAVE A WALL THICKNESS OF 2" MIN. ALL PIPE SHALL BE INSTALLED IN FACTORY PROVIDED KNOCKOUTS. UNUSED KNOCKOUTS NEED NOT BE GROUTED IF WALL IS LEFT INTACT.

5. KNOCKOUT OR CUTOUT HOLE SIZE IS EQUAL TO PIPE OUTER DIAM. PLUS CATCH BASIN WALL THICKNESS.

6. ROUND KNOCKOUTS MAY BE ON ALL 4 SIDES, WITH MAX. DIAM. OF 20". KNOCKOUTS MAY BE EITHER ROUND OR "D" SHAPE.

7. THE MAX. DEPTH FROM THE FINISHED GRADE TO THE PIPE INVERT IS 5'-0".

8. THE TAPER ON THE SIDES OF THE PRECAST BASE SECTION AND RISER SECTION SHALL NOT EXCEED 1/2"/FT.

9. CATCH BASIN FRAME AND GRATE SHALL BE IN ACCORDANCE WITH WSDOT /APWA STANDARD SPECIFICATIONS AND MEET THE STRENGTH REQUIREMENTS OF FEDERAL SPECIFICATION A-A-60005. MATING SURFACES SHALL BE FINISHED TO ASSURE NON-ROCKING FIT WITH ANY COVER POSITION.

10. FRAME AND GRATE MAY BE INSTALLED WITH FLANGE DOWN OR CAST INTO RISER.

11. FOR CATCH BASINS IN PARKING LOTS REFER TO WSDOT STANDARD PLAN B-5.60-01.

12. EDGE OF RISER OR BRICK SHALL NOT BE MORE THAN 2" FROM VERTICAL EDGE OF CATCH BASIN WALL.

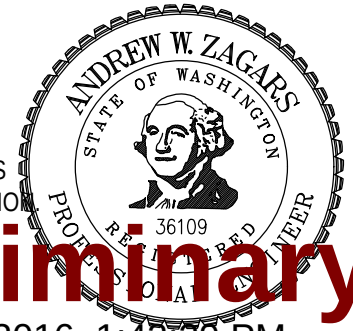

Preliminary

11/09/2016 1:42:29 PM

CITY OF SAMMAMISH
DEPARTMENT OF PUBLIC WORKS

CATCH BASIN TYPE 1

APPROVED BY
CITY ENGINEER _____ DATE _____

REV	DWN	CKD	DATE	FILE
	XXX	XXX	AUG-XX-2015	FIG07-04

REV. NO. X

FRAME AND GRATE
SEE STD DWGS 7-16
& 7-18 FOR DETAILS

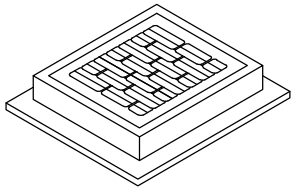

RISER SECTION

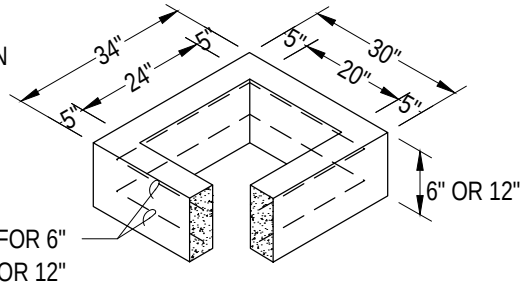

6" REDUCING SECTION

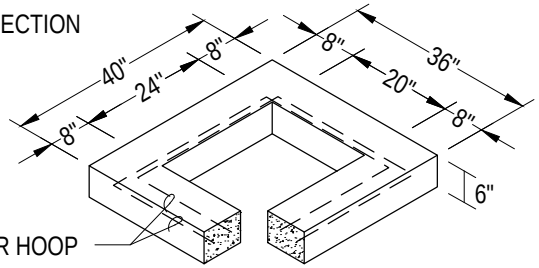

PRECAST BASE SECTION

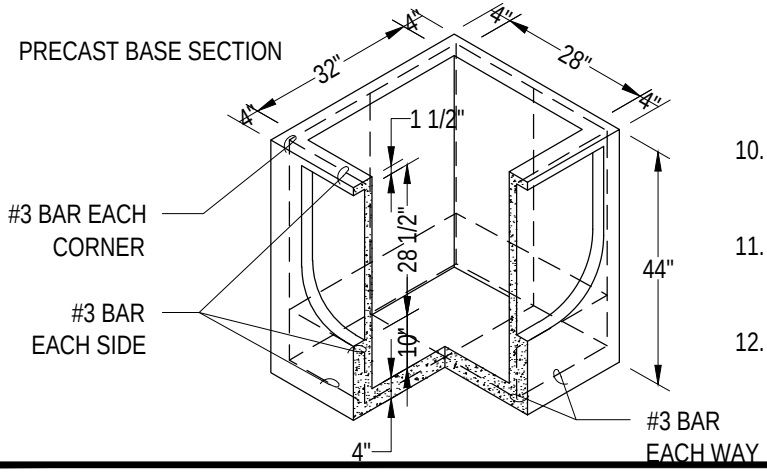

NOTES:

1. CATCH BASINS SHALL BE CONSTRUCTED IN ACCORDANCE WITH ASTM C478 (AASHTO M 199) & C890 UNLESS OTHERWISE SHOWN ON PLANS OR NOTED IN THE WSDOT/APWA STANDARD SPECIFICATIONS.
2. AS AN ACCEPTABLE ALTERNATIVE TO REBAR, WELDED WIRE FABRIC HAVING A MIN. AREA OF 0.12 SQUARE INCHES PER FOOT MAY BE USED. WELDED WIRE FABRIC SHALL COMPLY TO ASTM A497 (AASHTO M 221). WIRE FABRIC COMPLY TO ASTM A497 (AASHTO M 221). WIRE FABRIC SHALL NOT BE PLACED IN KNOCKOUTS.
3. ALL REINFORCED CAST-IN-PLACE CONCRETE SHALL BE CLASS 4000.
4. PRECAST BASES SHALL BE FURNISHED WITH CUTOUTS OR KNOCKOUTS. KNOCKOUTS SHALL HAVE A WALL THICKNESS OF 2" MIN. ALL PIPE SHALL BE INSTALLED IN FACTORY PROVIDED KNOCKOUTS. UNUSED KNOCKOUTS NEED NOT BE GROUTED IF WALL IS LEFT INTACT.
5. KNOCKOUT OR CUTOUT HOLE SIZE IS EQUAL TO PIPE OUTER DIAM. PLUS CATCH BASIN WALL THICKNESS.
6. ROUND KNOCKOUTS MAY BE ON ALL 4 SIDES, WITH MAX. DIAM. OF 26". KNOCKOUTS MAY BE EITHER ROUND OR "D" SHAPE.
7. THE MAX. DEPTH FROM THE FINISHED GRADE TO THE PIPE INVERT IS 5'-0".
8. THE TAPER ON THE SIDES OF THE PRECAST BASE SECTION AND RISER SECTION SHALL NOT EXCEED 1/2"/FT.
9. CATCH BASIN FRAME AND GRATE SHALL BE IN ACCORDANCE WITH WSDOT/APWA STANDARD SPECIFICATIONS AND MEET THE STRENGTH REQUIREMENTS OF FEDERAL SPECIFICATION A-A-60005. MATING SURFACES SHALL BE FINISHED TO ASSURE NON-ROCKING FIT WITH ANY COVER POSITION.
10. FRAME AND GRATE MAY BE INSTALLED WITH FLANGE DOWN OR CAST INTO RISER.
11. FOR CATCH BASINS IN PARKING LOTS REFER TO WSDOT STANDARD PLAN B-5.60-01.
12. EDGE OF RISER OR BRICK SHALL NOT BE MORE THAN 2" FROM VERTICAL EDGE OF CATCH BASIN WALL.

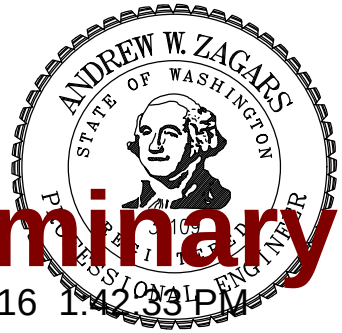

Preliminary

11/09/2016 1:42:33 PM

CITY OF SAMMAMISH
DEPARTMENT OF PUBLIC WORKS

CATCH BASIN TYPE 1-L

APPROVED BY
CITY ENGINEER _____ DATE _____

REV	DWN	CKD	DATE	FILE
	XXX	XXX	AUG-XX-2015	FIG07-05

REV. NO. X

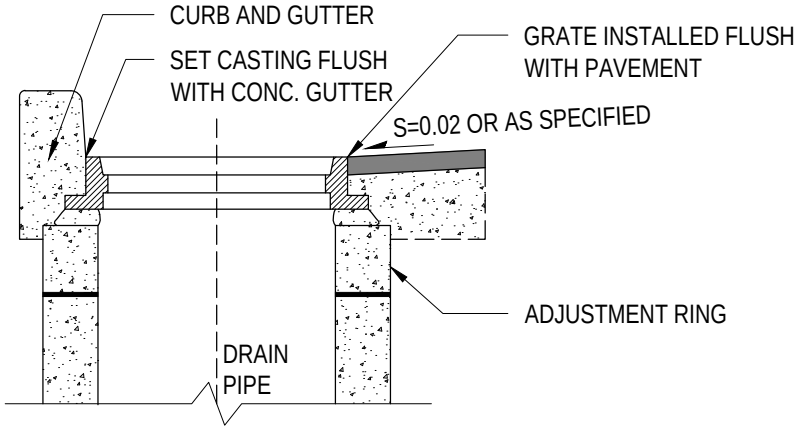

SECTION A-A

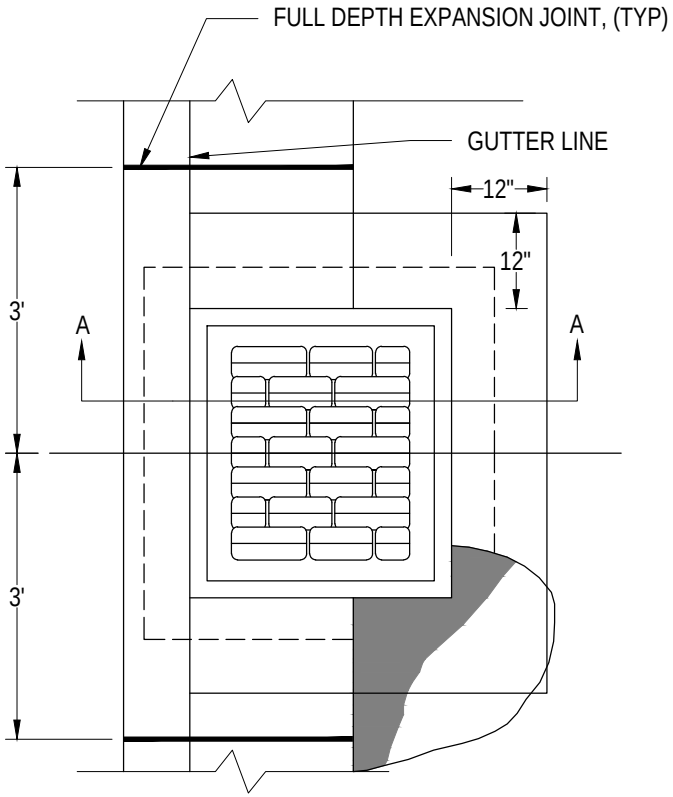

PLAN VIEW

NOTES:

1. AN APPROVED MATERIAL WHICH WILL PREVENT BONDING OF THE CURB TO FRAME, GRATE OR C.B. SHALL BE USED.

2. GROUT ALL JOINTS INSIDE AND OUTSIDE.

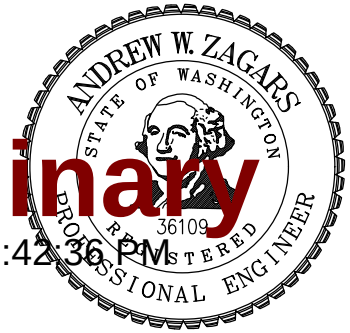

Preliminary

11/09/2016 1:42:36 PM

CITY OF SAMMAMISH
DEPARTMENT OF PUBLIC WORKS

CATCH BASIN INSTALLATION

APPROVED BY
CITY ENGINEER _____ DATE _____

REV	DWN	CKD	DATE	FILE
	XXX	XXX	AUG-XX-2015	FIG07-06

REV. NO. X

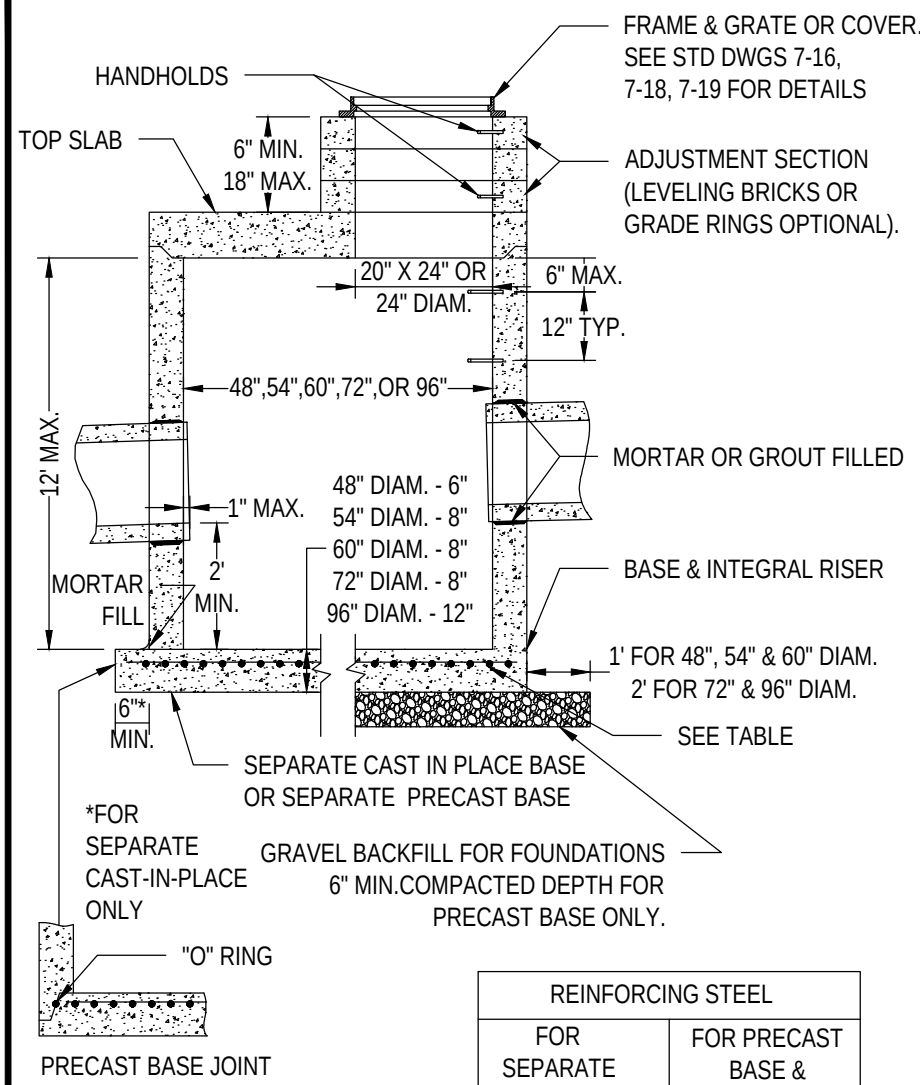

REINFORCING STEEL			
FOR SEPARATE BASES		FOR PRECAST BASE & INTEGRAL RISER	
DIAM.	SQ. IN./FT.	DIAM.	SQ. IN./FT.
48"	0.23	48"	0.15
54"	0.19	54"	0.19
60"	0.25	60"	0.25
72"	0.35	72"	0.24
96"	0.39	96"	0.29

NOTES:

1. CATCH BASINS SHALL BE CONSTRUCTED IN ACCORDANCE WITH ASTMC478 (AASHTO M199) AND ASTM C890 UNLESS OTHERWISE SHOWN ON PLANS OR NOTED IN THE WSDOT/APWA STANDARD SPECIFICATIONS.
2. HANDHOLDS IN ADJUSTMENT SECTION SHALL HAVE 3" MIN. CLEARANCE. STEPS IN CATCH BASIN SHALL HAVE 6" MIN. CLEARANCE. SEE STD DWG 7-08, CATCH BASIN DETAILS. HANDHOLDS SHALL BE PLACED IN ALTERNATING GRADE RINGS OR LEVELING BRICK COURSE WITH A MIN. OF ONE HANDHOLD BETWEEN THE LAST STEP AND TOP OF THE MANHOLE.
3. ALL REINFORCED CAST-IN-PLACE CONCRETE SHALL BE CLASS 4000. ALL PRECAST CONCRETE SHALL BE CLASS 4000.
4. PRECAST BASES SHALL BE FURNISHED WITH CUTOUTS OR KNOCKOUTS. KNOCKOUTS SHALL HAVE WALL THICKNESS OF 2" MIN. UNUSED KNOCKOUTS NEED NOT BE GROUTED IF WALL IS LEFT INTACT. PIPES SHALL BE INSTALLED ONLY IN FACTORY KNOCKOUTS UNLESS OTHERWISE APPROVED BY THE ENGINEER.
5. KNOCKOUT OR CUTOUT HOLE SIZE SHALL EQUAL PIPE OUTER DIAM. PLUS CATCH BASIN WALL THICKNESS. MAX. HOLE SIZE SHALL BE 36" FOR 48" CATCH BASIN, 42" FOR 54" C.B., 48" FOR 60" C.B., 60" FOR 72" C.B., 84" FOR 96" C.B. MIN. DISTANCE BETWEEN HOLES SHALL BE 8" FOR 48", 54", AND 60" C.B.; 12" FOR 72" AND 96" C.B.
6. CATCH BASIN FRAMES AND GRATES OR COVERS SHALL BE IN ACCORDANCE WITH STD DWGS 7-16, 7-18, & 7-19 AND MEET THE STRENGTH REQUIREMENTS OF FEDERAL SPECIFICATION A-A-60005. MATING SURFACES SHALL BE FINISHED TO ASSURE NON-ROCKING FIT WITH ANY COVER POSITION.
7. ALL BASE REINFORCING STEEL SHALL HAVE A MIN. YIELD STRENGTH OF 60,000 PSI AND BE PLACED IN THE UPPER HALF OF THE BASE WITH 1" MIN. CLEARANCE.
8. MIN. SOIL BEARING VALUE SHALL EQUAL 3,300 POUNDS PER SQUARE FOOT.
9. FOR DETAILS SHOWING LADDER, STEPS, HANDRAILS AND TOP SLABS, SEE STD DWG 7-08.
10. SEE THE WSDOT STANDARD SPECIFICATIONS SEC. 7-05.3 FOR JOINT REQUIREMENTS.
11. IF PIPE IS SMOOTH WALL PLASTIC, NOT CONCRETE, A SAND COLLAR IS REQUIRED.

Preliminary

11/09/2016 1:42:39 PM

CITY OF SAMMAMISH
DEPARTMENT OF PUBLIC WORKS

CATCH BASIN TYPE 2 –
48", 54", 60", 72" & 96"

APPROVED BY
CITY ENGINEER _____ DATE _____

REV	DWN	CKD	DATE	FILE
	XXX	XXX	AUG-XX-2015	FIG07-07

REV. NO. X

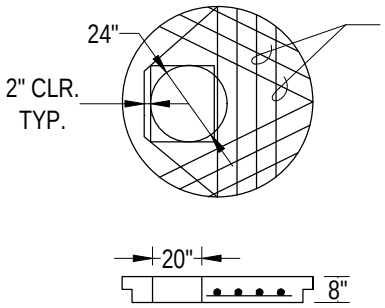

48", 54" & 60" TOP SLAB

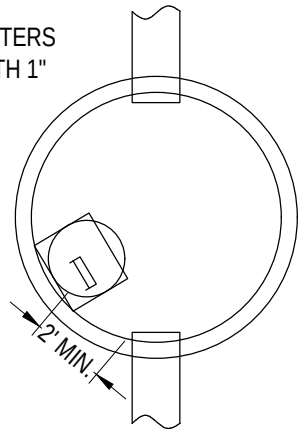

TYPICAL ORIENTATION FOR ACCESS AND STEPS

NOTES:

1. PROPRIETARY CATCH BASIN HANDHOLDS AND STEPS ARE ACCEPTABLE, PROVIDED THAT THEY CONFORM TO SEC. R, ASTM C478, AASHTO M-199 AND MEET ALL WISHA REQUIREMENTS.
2. CATCH BASIN STEP/HANDHOLD LEGS SHALL BE PARALLEL OR APPROXIMATELY RADIAL AT THE OPTION OF THE MANUFACTURER, EXCEPT THAT ALL STEPS IN ANY CATCH BASIN SHALL BE SIMILAR. PENETRATION OF OUTER WALL BY A LEG IS PROHIBITED.
3. HANDHOLDS AND STEPS SHALL HAVE "DROP" RUNGS AS SHOWN ON DETAIL OR PROTUBERANCES TO PREVENT SIDEWAYS SLIP.
4. SLAB OPENING MAY BE 24" X 20" OR 24" DIAM.
5. AS AN ACCEPTABLE ALTERNATIVE TO REBAR, WELDED WIRE FABRIC HAVING A MIN. AREA OF 0.12 SQUARE INCHES PER FOOT MAY BE USED. WELDED WIRE FABRIC SHALL COMPLY TO ASTM A497.
6. LADDERS OR STEPS SHALL EXTEND TO WITHIN 16" OF BOTTOM OF CATCH BASIN.
7. HANGING LADDERS SHALL BE PERMANENTLY FASTENED AT TOP BY HANGING ON STEP OR BY BOLTING OR EMBEDDING IN CONCRETE. EACH SHALL BE EMBEDDED AT BOTTOM IN BASE.
8. ADDITIONAL SAFETY FEATURES MAY BE REQUIRED.

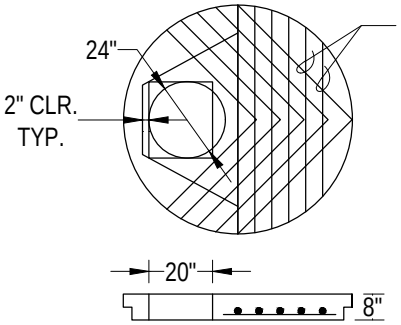

72" TOP SLAB

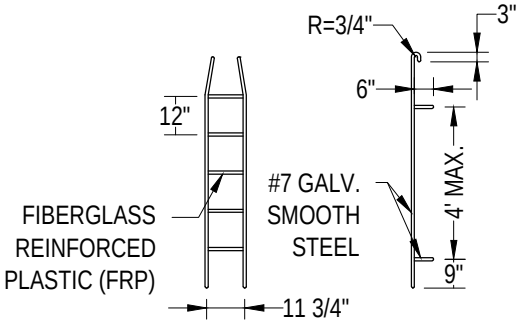

PREFABRICATED LADDER

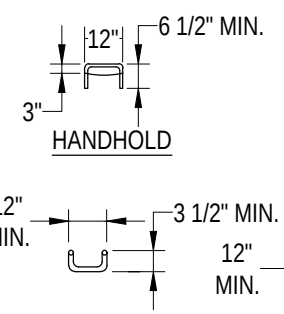

HANDHOLD

ELEVATION

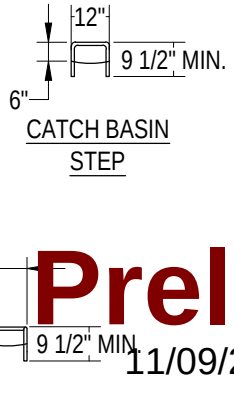

CATCH BASIN STEP

PLAN

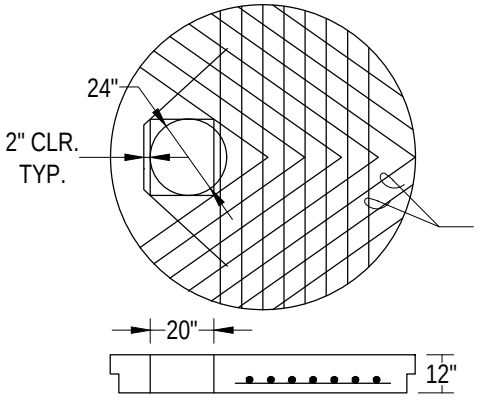

96" TOP SLAB

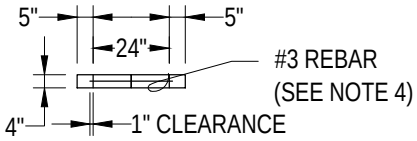

GRADE RING

Preliminary
11/09/2016 1:42:42 PM

CITY OF SAMMAMISH
DEPARTMENT OF PUBLIC WORKS

CATCH BASIN – TYPE 2 DETAILS

APPROVED BY
CITY ENGINEER _____ DATE _____

REV	DWN	CKD	DATE	FILE
	XXX	XXX	AUG-XX-2015	FIG07-08

REV. NO. X

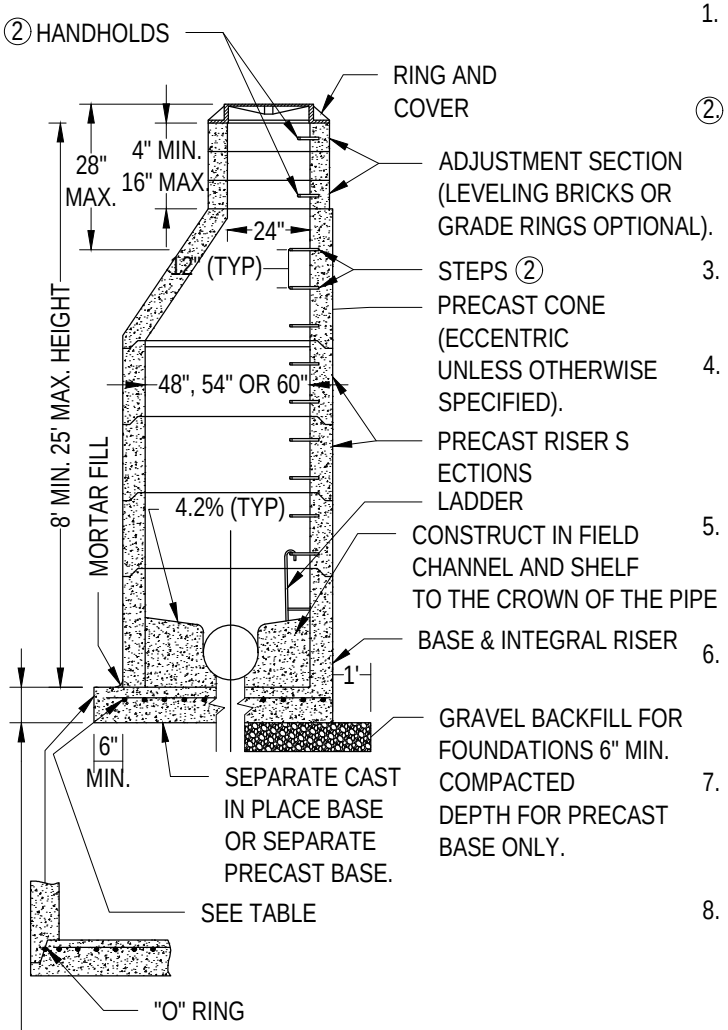

REINFORCING STEEL			
FOR SEPARATE BASES		FOR PRECAST BASE & INTEGRAL RISER	
DIAM.	SQ. IN./FT.	DIAM.	SQ. IN./FT.
48"	0.23	48"	0.15
54"	0.19	54"	0.19
60"	0.25	60"	0.25

NOTES:

1. MANHOLES SHALL BE CONSTRUCTED IN ACCORDANCE WITH AASHTO M199 UNLESS OTHERWISE SHOWN ON PLANS OR NOTED IN THE WSDOT/APWA STANDARD SPECIFICATIONS.

② HANDHOLDS IN ADJUSTMENT SECTION SHALL HAVE 3" MIN. CLEARANCE. STEPS IN MANHOLE SHALL HAVE 6" MIN. CLEARANCE. SEE STD DWG 7-12, "MANHOLE DETAILS." HANDHOLDS SHALL BE PLACED IN ALTERNATING GRADE RINGS OR LEVELING BRICK COURSE WITH A MIN. OF ONE HAND HOLD BETWEEN THE LAST STEP AND THE TOP OF THE MANHOLE.

3. ALL REINFORCED CAST-IN-PLACE CONCRETE SHALL BE CLASS 4000. ALL PRECAST CONCRETE SHALL BE CLASS 4000. NON-REINFORCED CONCRETE IN CHANNEL AND SHELF SHALL BE CLASS 3000.

4. PRECAST BASES SHALL BE FURNISHED WITH CUTOUTS OR KNOCKOUTS. KNOCKOUTS SHALL HAVE WALL THICKNESS OF 2" MIN. UNUSED KNOCKOUTS NEED NOT BE GROUTED IF WALL IS LEFT INTACT. PIPES SHALL BE INSTALLED ONLY IN FACTORY KNOCKOUTS UNLESS OTHERWISE APPROVED BY THE ENGINEER.

5. KNOCKOUT OR CUTOUT HOLE SIZE SHALL EQUAL PIPE OUTER DIAM. PLUS MANHOLE WALL THICKNESS. MAX. HOLE SIZE SHALL BE 36" FOR 48" MANHOLE, 42" FOR 54" MANHOLE, 48" FOR 60" M.H. MIN. DISTANCE BETWEEN HOLES SHALL BE 8".

6. MANHOLE RINGS AND COVERS SHALL MEET THE STRENGTH REQUIREMENTS OF FEDERAL SPECIFICATION A-A-60005. MATING SURFACES SHALL BE FINISHED TO ASSURE NON-ROCKING FIT WITH ANY COVER POSITION.

7. ALL BASE REINFORCING STEEL SHALL HAVE A MIN. YIELD STRENGTH OF 60,000 PSI AND BE PLACED IN THE UPPER HALF OF THE BASE WITH 1" MIN. CLEARANCE.

8. FOR HEIGHTS OF 12' OR LESS, MIN. SOIL BEARING VALUE SHALL EQUAL 3,300 POUNDS PER SQUARE FOOT. FOR HEIGHTS OVER 12', MIN. SOIL BEARING VALUE SHALL EQUAL 3,800 POUNDS PER SQUARE FOOT.

9. FOR DETAILS SHOWING GRADE RING, LADDER, STEPS, HANDHOLDS, AND TOP SLABS, SEE STD DWG 7-12, "MANHOLE DETAILS".

10. SEE THE WSDOT STANDARD SPECIFICATIONS SEC. 7-05.3 FOR JOINT REQUIREMENTS.

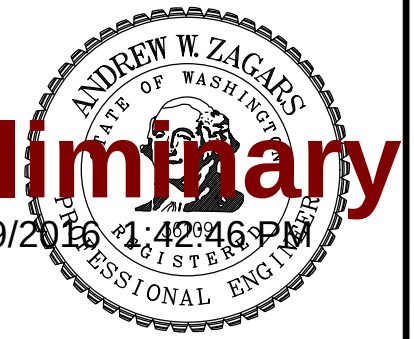

Preliminary
11/09/2016 1:42:46 PM

CITY OF SAMMAMISH
DEPARTMENT OF PUBLIC WORKS

MANHOLE TYPE 1–
48", 54" & 60"

APPROVED BY
CITY ENGINEER _____ DATE _____

REV	DWN	CKD	DATE	FILE
	XXX	XXX	AUG-XX-2015	FIG07-09

REV. NO. X

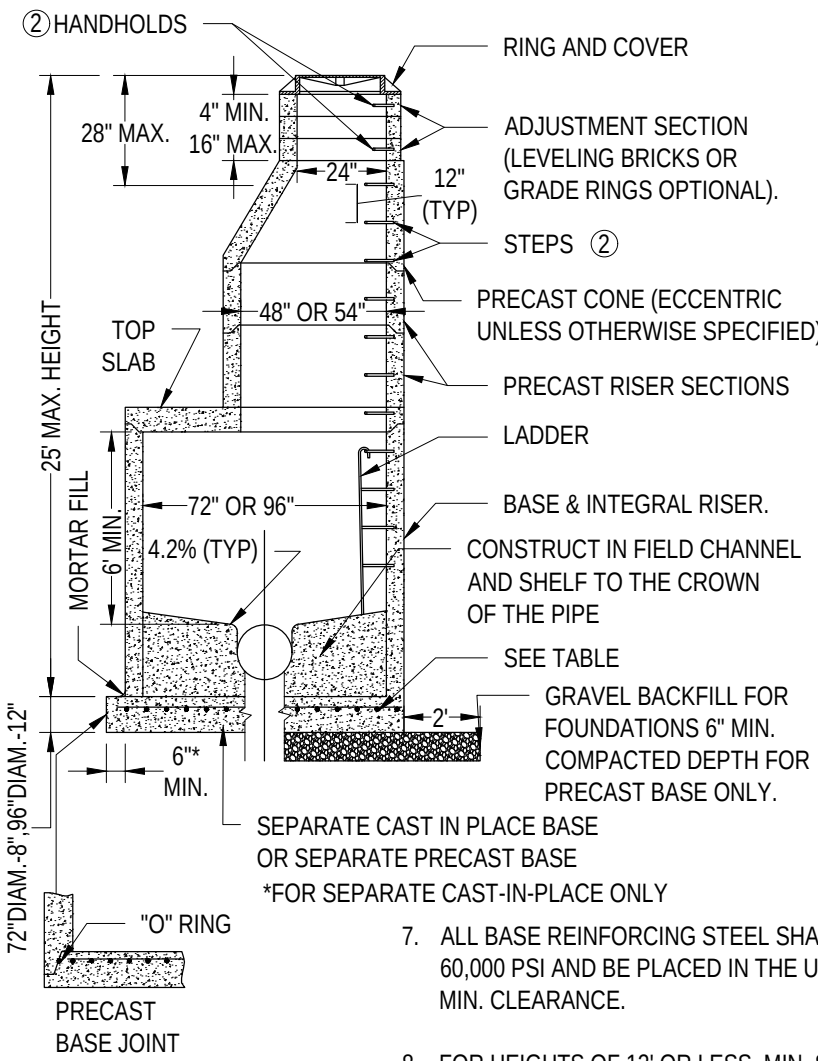

NOTES:

1. MANHOLES SHALL BE CONSTRUCTED IN ACCORDANCE WITH AASHTO M199 UNLESS OTHERWISE SHOWN ON PLANS OR NOTED IN THE WSDOT/APWA STANDARD SPECIFICATIONS.

② HANDHOLDS IN ADJUSTMENT SECTION SHALL HAVE 3" MIN. CLEARANCE. STEPS IN MANHOLE SHALL HAVE 6" MIN. CLEARANCE. SEE STD DWG 7-12, "MANHOLE DETAILS." HANDHOLDS SHALL BE PLACED IN ALTERNATING GRADE RINGS OR LEVELING BRICK COURSE WITH A MIN. OF ONE HAND HOLD BETWEEN THE LAST STEP AND THE TOP OF THE MANHOLE.

3. ALL REINFORCED CAST-IN-PLACE CONCRETE SHALL BE CLASS 4000. ALL PRECAST CONCRETE SHALL BE CLASS 4000. NON-REINFORCED CONCRETE IN CHANNEL AND SHELF SHALL BE CLASS 3000.

4. PRECAST BASES SHALL BE FURNISHED WITH CUTOUTS OR KNOCKOUTS. KNOCKOUTS SHALL HAVE WALL THICKNESS OF 2" MIN. UNUSED KNOCKOUTS NEED NOT BE GROUTED IF WALL IS LEFT INTACT. PIPES SHALL BE INSTALLED ONLY IN FACTORY KNOCKOUTS UNLESS OTHERWISE APPROVED BY THE ENGINEER.

5. KNOCKOUT OR CUTOUT HOLE SIZE SHALL EQUAL PIPE OUTER DIAM. PLUS MANHOLE WALL THICKNESS. MAX. HOLE SIZE SHALL BE 60" FOR 72" MANHOLE, 84" FOR 96" MANHOLE. MIN. DISTANCE BETWEEN HOLES SHALL BE 12".

6. MANHOLE RINGS AND COVERS SHALL MEET THE STRENGTH REQUIREMENTS OF FEDERAL SPECIFICATION A-A-60005. MATING SURFACES SHALL BE FINISHED TO ASSURE NON-ROCKING FIT WITH ANY COVER POSITION.

7. ALL BASE REINFORCING STEEL SHALL HAVE A MIN. YIELD STRENGTH OF 60,000 PSI AND BE PLACED IN THE UPPER HALF OF THE BASE WITH 1" MIN. CLEARANCE.

8. FOR HEIGHTS OF 12' OR LESS, MIN. SOIL BEARING VALUE SHALL EQUAL 3,300 POUNDS PER SQUARE FOOT. FOR HEIGHTS OVER 12', MIN. SOIL BEARING VALUE SHALL EQUAL 3,800 POUNDS PER SQUARE FOOT.

9. FOR DETAILS SHOWING GRADE RING, LADDER, STEPS, HANDHOLDS, AND TOP SLABS, SEE STD DWG 7-12, "MANHOLE DETAILS".

10. SEE THE WSDOT STANDARD SPECIFICATIONS SEC. 7-05.3 FOR JOINT REQUIREMENTS.

REINFORCING STEEL			
FOR SEPARATE BASES		FOR PRECAST BASE & INTEGRAL RISER	
DIAM.	SQ. IN./FT.	DIAM.	SQ. IN./FT.
72"	0.35	72"	0.24
96"	0.39	96"	0.29

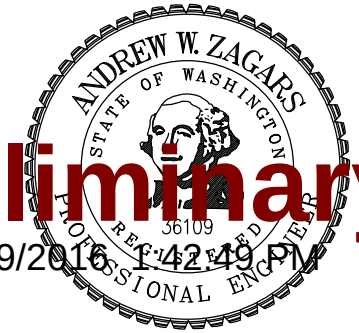

Preliminary

11/09/2016 1:42:49 PM

CITY OF SAMMAMISH
DEPARTMENT OF PUBLIC WORKS

MANHOLE TYPE 2 – 72" & 96"

APPROVED BY
CITY ENGINEER _____ DATE _____

REV	DWN	CKD	DATE	FILE
	XXX	XXX	AUG-XX-2015	FIG07-10

REV. NO. X

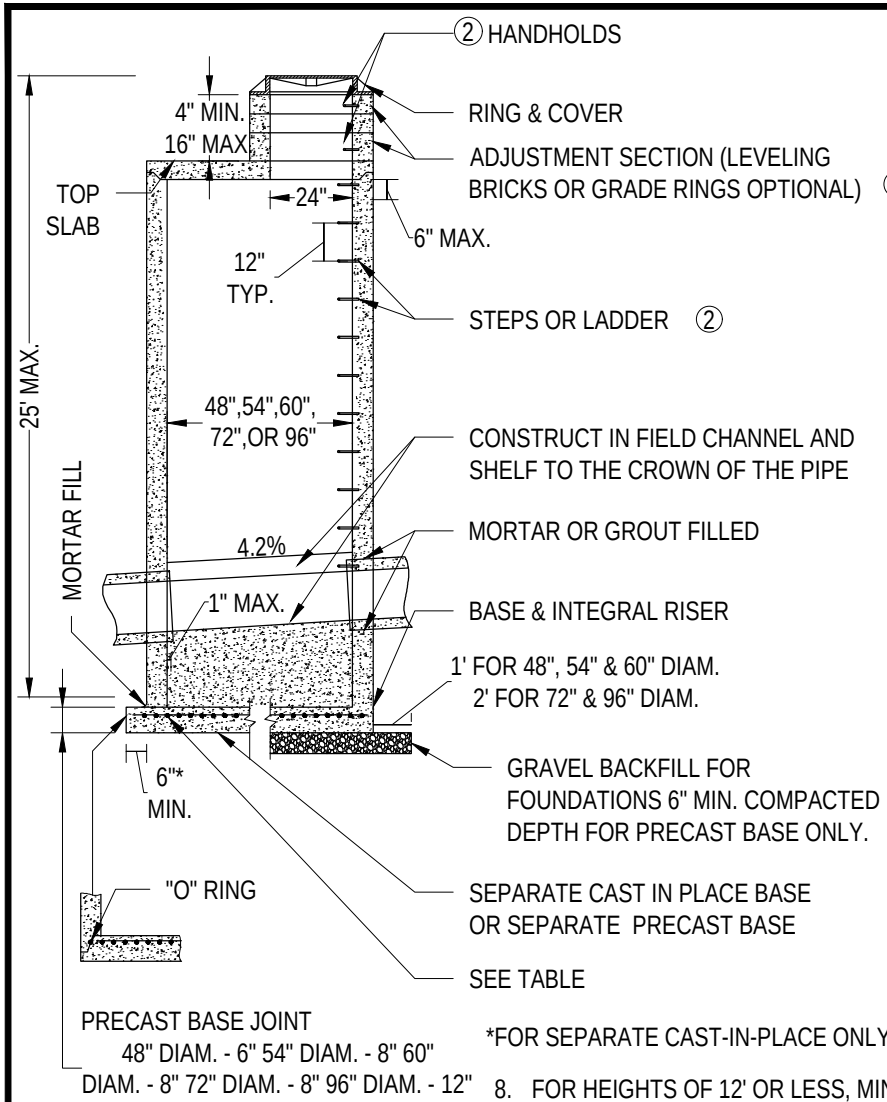

*FOR SEPARATE CAST-IN-PLACE ONLY

REINFORCING STEEL			
FOR SEPARATE BASES		FOR PRECAST BASE & INTEGRAL RISER	
DIAM.	SQ. IN./FT.	DIAM.	SQ. IN./FT.
48"	0.23	48"	0.15
54"	0.19	54"	0.19
60"	0.25	60"	0.25
72"	0.35	72"	0.24
96"	0.39	96"	0.29

NOTES:

1. MANHOLES SHALL BE CONSTRUCTED IN ACCORDANCE WITH AASHTO M199 UNLESS OTHERWISE SHOWN ON PLANS OR NOTED IN THE WSDOT/APWA STANDARD SPECIFICATIONS.

② HANDHOLDS IN ADJUSTMENT SECTION SHALL HAVE 3" MIN. CLEARANCE. STEPS IN MANHOLE SHALL HAVE 6" MIN. CLEARANCE. SEE STD DWG 7-12, "MANHOLE DETAILS." HANDHOLDS SHALL BE PLACED IN ALTERNATING GRADE RINGS OR LEVELING BRICK COURSE WITH A MIN. OF ONE HAND HOLD BETWEEN THE LAST STEP AND THE TOP OF THE MANHOLE.

3. ALL REINFORCED CAST-IN-PLACE CONCRETE SHALL BE CLASS 4000. ALL PRECAST CONCRETE SHALL BE CLASS 4000. NON-REINFORCED CONCRETE IN CHANNEL AND SHELF SHALL BE CLASS 3000.

4. PRECAST BASES SHALL BE FURNISHED WITH CUTOUTS OR KNOCKOUTS. KNOCKOUTS SHALL HAVE WALL THICKNESS OF 2" MIN. UNUSED KNOCKOUTS NEED NOT BE GROUTED IF WALL IS LEFT INTACT. PIPES SHALL BE INSTALLED ONLY IN FACTORY KNOCKOUTS UNLESS OTHERWISE APPROVED BY THE ENGINEER.

5. KNOCKOUT OR CUTOUT HOLE SIZE SHALL EQUAL PIPE OUTER DIAM. PLUS MANHOLE WALL THICKNESS. MAX. HOLE SIZE SHALL BE 36" FOR 48" M.H., 42" FOR 54" M.H., 48" FOR 60" M.H., 60" FOR 72" M.H., 84" FOR 96" M.H. MIN. DISTANCE BETWEEN HOLES SHALL BE 8" FOR 48", 54", AND 60" M.H., 12" FOR 72" AND 96" M.H.

6. MANHOLE RINGS AND COVERS SHALL MEET THE STRENGTH REQUIREMENTS OF FEDERAL SPECIFICATION A-A-60005. MATING SURFACES SHALL BE FINISHED TO ASSURE NON-ROCKING FIT WITH ANY COVER POSITION.

7. ALL BASE REINFORCING STEEL SHALL HAVE A MIN. YIELD STRENGTH OF 60,000 PSI AND BE PLACED IN THE UPPER HALF OF THE BASE WITH 1" MIN. CLEARANCE.

8. FOR HEIGHTS OF 12' OR LESS, MIN. SOIL BEARING VALUE SHALL EQUAL 3,300 POUNDS PER SQUARE FOOT. FOR HEIGHTS OVER 12', MIN. SOIL BEARING VALUE SHALL EQUAL 3,800 POUNDS PER SQUARE FOOT.

9. FOR DETAILS SHOWING GRADE RING, LADDER, STEPS, HANDHOLDS, AND TOP SLABS, SEE STD DWG 7-12, "MANHOLE DETAILS".

10. SEE THE WSDOT STANDARD SPECIFICATIONS SEC. 7-05.3 FOR JOINT REQUIREMENTS.

ANDREW W. ZAGARS
STATE OF WASHINGTON
36109
REGISTERED PROFESSIONAL ENGINEER

Preliminary

11/09/2016 1:42:52 PM

CITY OF SAMMAMISH
DEPARTMENT OF PUBLIC WORKS

MANHOLE TYPE 3 –
48", 54", 60", 72" & 96"

APPROVED BY
CITY ENGINEER _____ DATE _____

REV	DWN	CKD	DATE	FILE
	XXX	XXX	AUG-XX-2015	FIG07-11

REV. NO. X

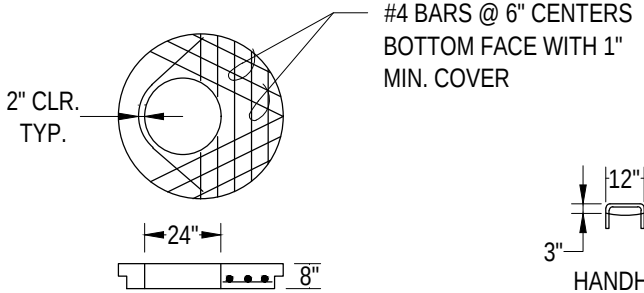

48", 54", & 60" TOP SLAB

*ALL STEPS & RUNGS 1" DIAM. GALV. REBAR OR COPOLYMER PROPYLENE.

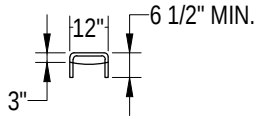

HANDHOLD

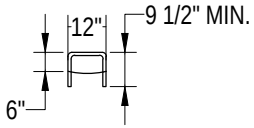

MANHOLE STEP

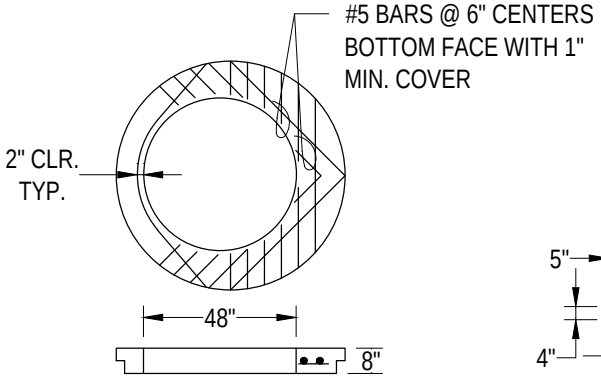

72" TOP SLAB

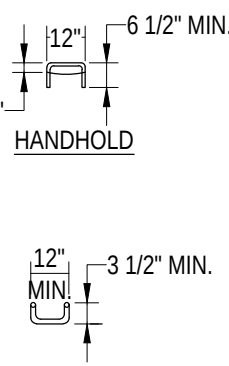

ELEVATION

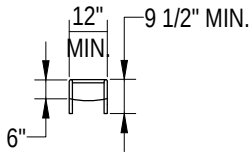

PLAN

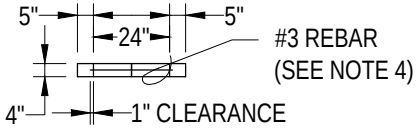

GRADE RING

NOTES:

1. PROPRIETARY MANHOLE HANDHOLDS AND STEPS ARE ACCEPTABLE, PROVIDED THAT THEY CONFORM TO SEC. R, ASTM C478, AASHTO M199 AND MEET ALL WISHA REQUIREMENTS.
2. MANHOLE STEP/HANDHOLD LEGS SHALL BE PARALLEL OR APPROXIMATELY RADIAL AT THE OPTION OF THE MANUFACTURER, EXCEPT THAT ALL STEPS IN ANY MANHOLE SHALL BE SIMILAR. PENETRATION OF OUTER WALL BY A LEG IS PROHIBITED.
3. HANDHOLDS AND STOPS SHALL HAVE "DROP" RUNGS OR PROTUBERANCES TO PREVENT SIDEWAYS SLIP.
4. LADDERS OR STEPS SHALL EXTEND TO WITHIN 16" OF BOTTOM OF MANHOLE.
5. HANGING LADDERS SHALL BE PERMANENTLY FASTENED AT TOP BY HANGING ON STEP OR BY BOLTING OR EMBEDDING IN CONCRETE. EACH SHALL BE EMBEDDED AT BOTTOM IN BASE.
6. ADDITIONAL SAFETY FEATURES MAY BE REQUIRED.

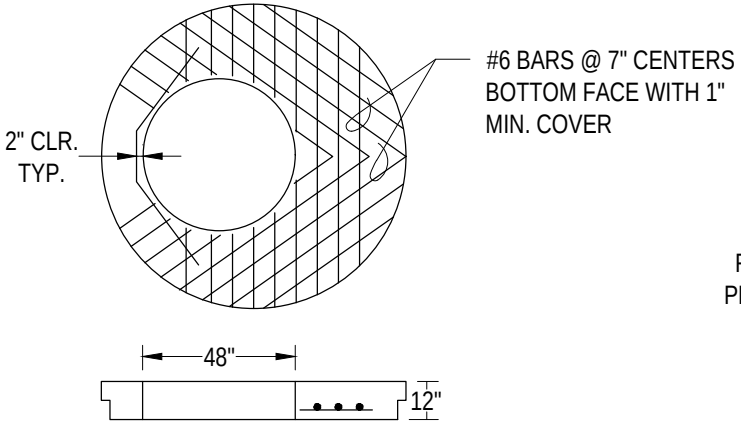

96" TOP SLAB

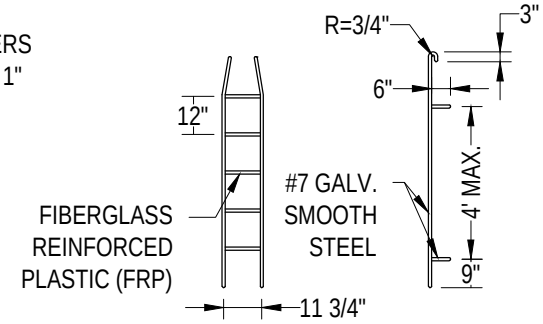

PREFABRICATED LADDER

Preliminary
11/09/2016 1:42:56 PM

CITY OF SAMMAMISH
DEPARTMENT OF PUBLIC WORKS

MANHOLE DETAILS

APPROVED BY
CITY ENGINEER _____ DATE _____

REV	DWN	CKD	DATE	FILE
	XXX	XXX	AUG-XX-2015	FIG07-12

REV. NO. X

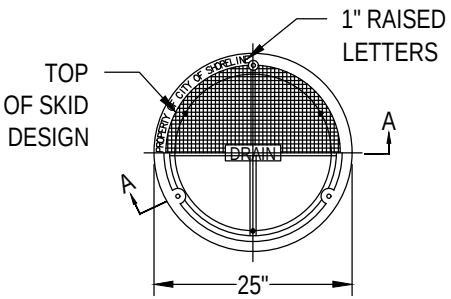

PLAN

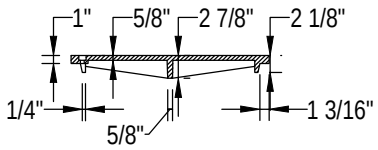

SECTION A-A

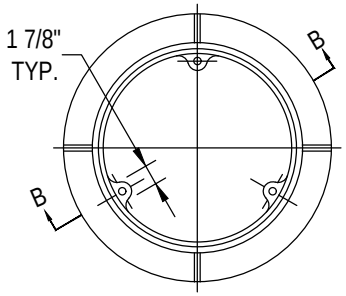

PLAN

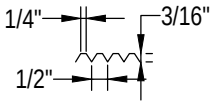

COVER SKID DESIGN DETAIL

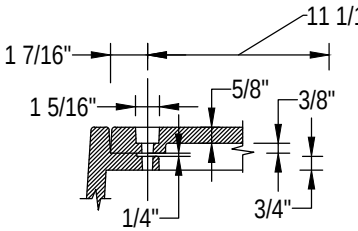

BOLT-DOWN DETAIL

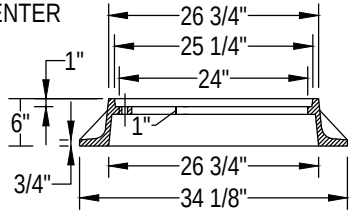

SECTION B-B

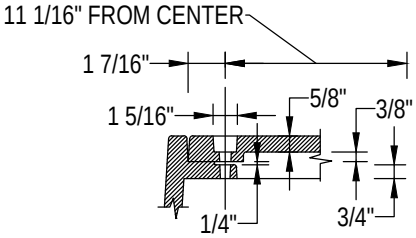

BOLT-DOWN DETAIL

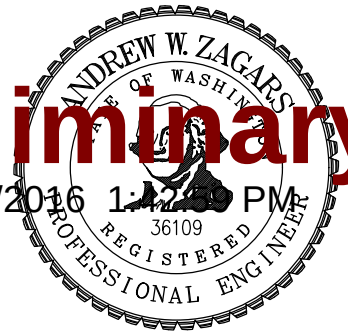

Preliminary

11/09/2016 1:42:59 PM

NOTES:

1. USE WITH THREE LOCKING BOLTS 5/8"-11 NC STAINLESS TYPE 304 STEEL SOCKET HEAD (ALLEN HEAD) CAP SCREWS 2" LONG. DRILL HOLES SPACED 120° AT 11 1/16" RADIUS.
2. MATERIAL SHALL BE DUCTILE IRON ASTM A536 GRADE 80-55-06 OR CAST IRON ASTM A48 CLASS 30.
3. A 2-FOOT ASPHALT PAVEMENT SURFACE SHALL BE PLACED AROUND THE OUTSIDE PERIMETER OF THE FRAME AND LID IN LOCATIONS IN UNPAVED AREAS.

CITY OF SAMMAMISH
DEPARTMENT OF PUBLIC WORKS

LOCKING MANHOLE COVER AND INSTALLATION

APPROVED BY
CITY ENGINEER _____ DATE _____

REV	DWN	CKD	DATE	FILE
	XXX	XXX	AUG-XX-2015	FIG07-13

REV. NO. X

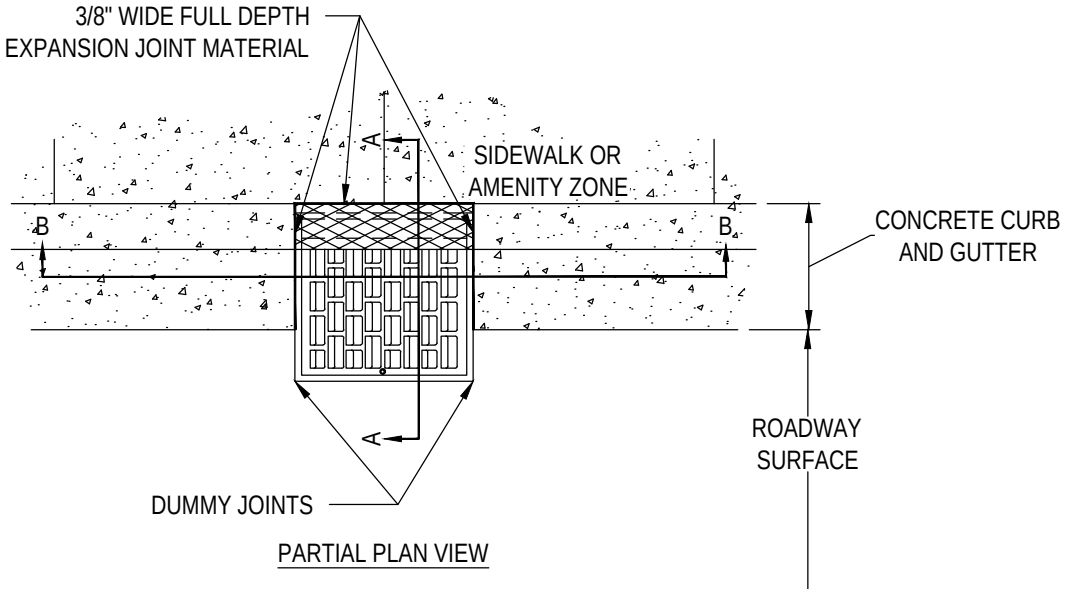

PARTIAL PLAN VIEW

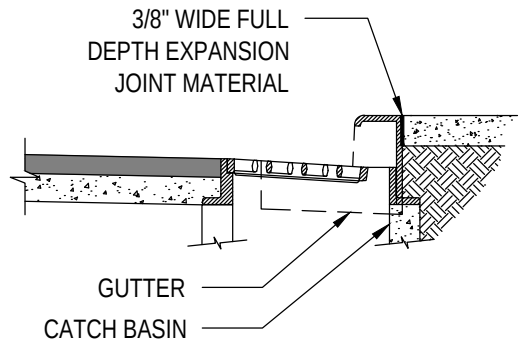

INLET WITH SIDEWALK

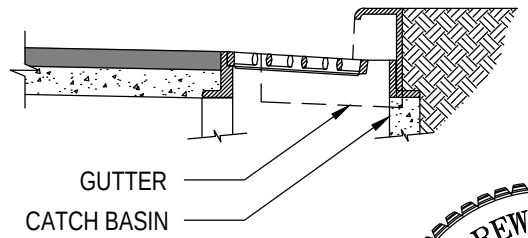

INLET WITH AMENITY ZONE

SECTION A-A

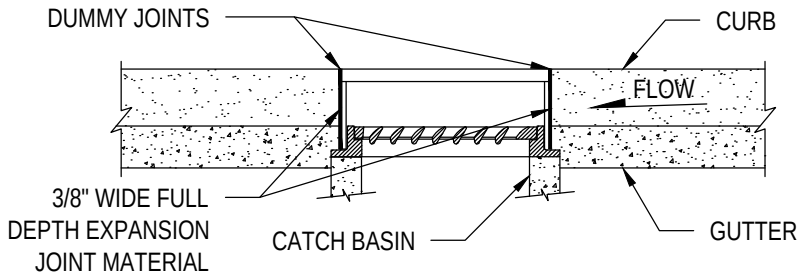

SECTION B-B

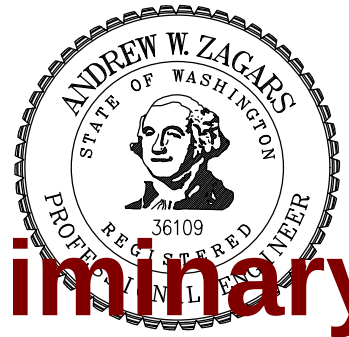

Preliminary

11/09/2016 1:43:04 PM

NOTE:

1. SET TO GRADE AND CONSTRUCT ROAD AND GUTTER TO BE FLUSH WITH FRAME.
2. SEE STD DWG 7-16 FOR TYPE OF GRATE USE.
3. SEE STD DWG 7-15 FOR FRAME DETAIL.
4. SEE STD DWG 7-06 FOR CATCH BASIN INSTALLATION.

CITY OF SAMMAMISH
DEPARTMENT OF PUBLIC WORKS

THROUGH–CURB INLET AND
VERTICAL CURB INSTALLATION

APPROVED BY
CITY ENGINEER _____ DATE _____

REV	DWN	CKD	DATE	FILE
	XXX	XXX	AUG–XX–2015	FIG07–14

REV. NO. X

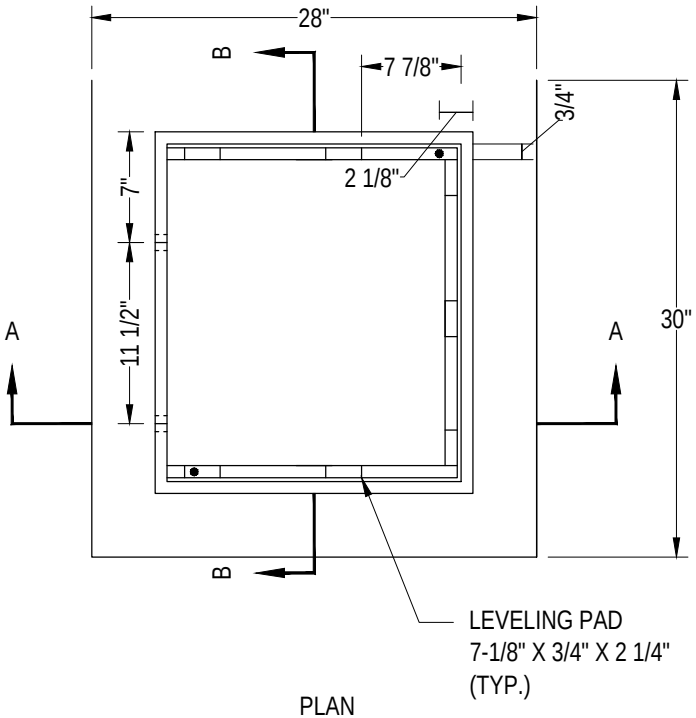

PLAN

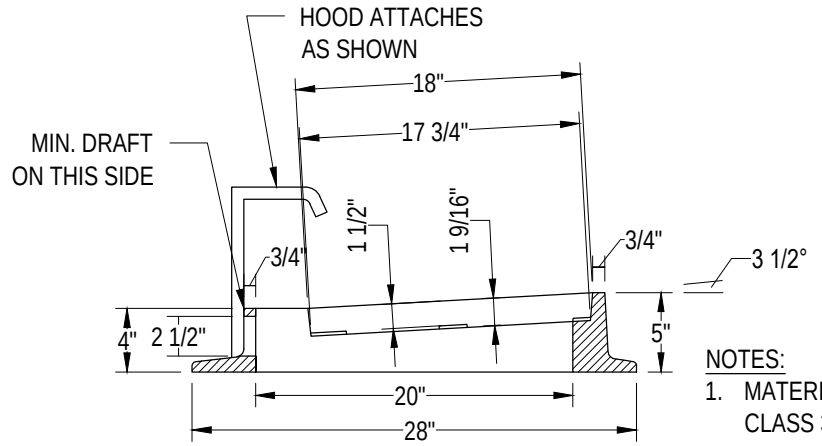

SECTION A-A

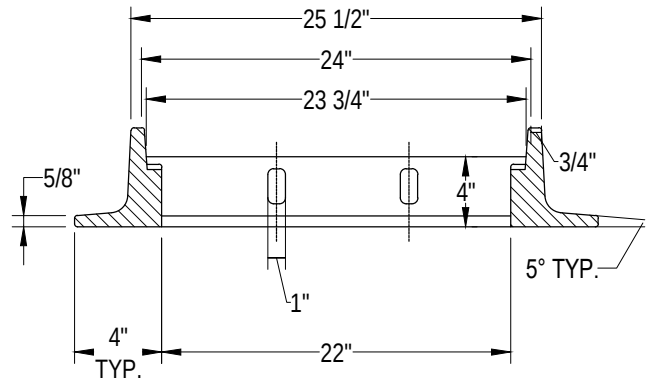

SECTION B-B

NOTES:

1. MATERIAL IS CAST IRON ASTM A48 CLASS 30.
2. SEE STD DWG 7-16 FOR VANED GRATE.
3. PATTERN ON TOP SURFACE OF HOOD SHALL BE 3/16" NON-SKID.
4. BOLT, WASHER, & NUT SHALL BE GALVANIZED OR EROSION RESISTANT.

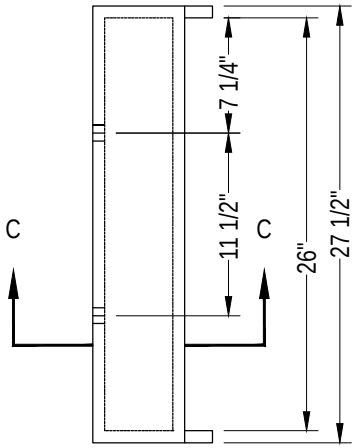

HOOD DETAIL

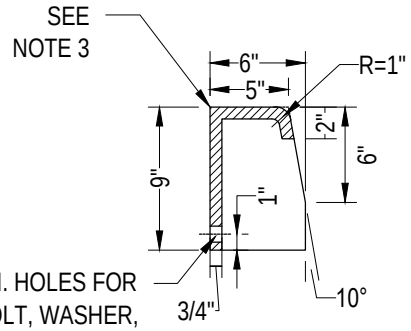

SECTION C-C

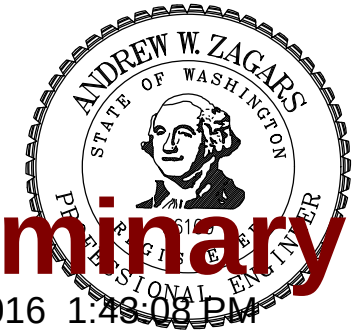

Preliminary

11/09/2016 1:48:08 PM

CITY OF SAMMAMISH
DEPARTMENT OF PUBLIC WORKS

THROUGH-CURB INLET FRAME

APPROVED BY
CITY ENGINEER _____ DATE _____

REV	DWN	CKD	DATE	FILE
	XXX	XXX	AUG-XX-2015	FIG07-15

REV. NO. X

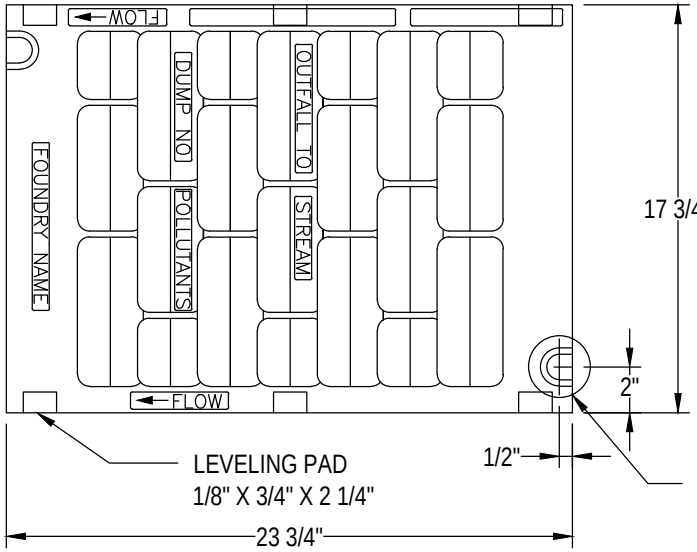

PLAN

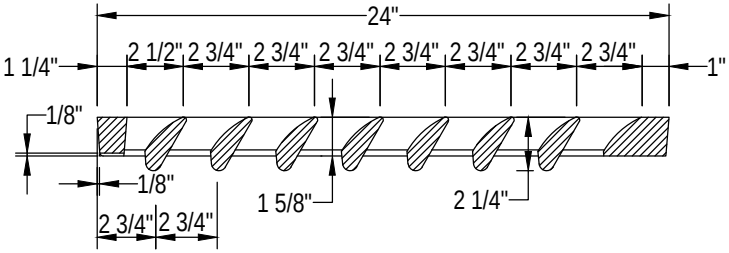

ELEVATION

Preliminary

11/09/2016 1:43:11 PM

NOTES:

1. SELF-LOCK VANED GRATE MANUFACTURER SUBJECT TO APPROVAL BY THE DIRECTOR OR DESIGNEE.
2. USE WITH TWO LOCKING BOLTS 5/8"-11 NC STAINLESS TYPE 304 STEEL SOCKET HEAD (ALLEN HEAD) CAP SCREWS 2" LONG.
3. MATERIAL SHALL BE DUCTILE IRON ASTM A536 GRADE 80-55-06.
4. "OUTFALL TO STREAM DUMP NO POLLUTANTS" MAY BE LOCATED ON THE BORDER AREA.

CITY OF SAMMAMISH
DEPARTMENT OF PUBLIC WORKS

VANED GRATE

APPROVED BY
CITY ENGINEER _____ DATE _____

REV	DWN	CKD	DATE	FILE
	XXX	XXX	AUG-XX-2015	FIG07-16

REV. NO. X

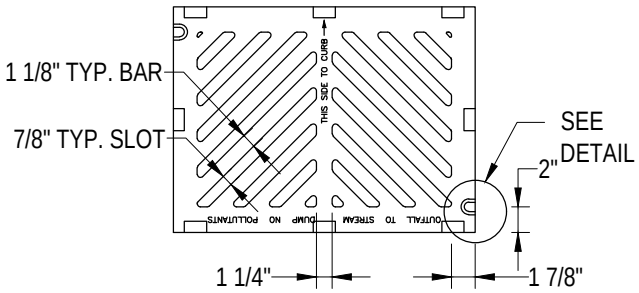

TOP VIEW

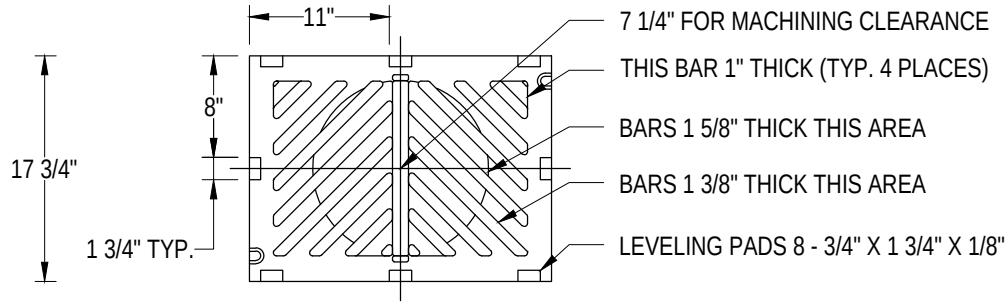

BOTTOM VIEW

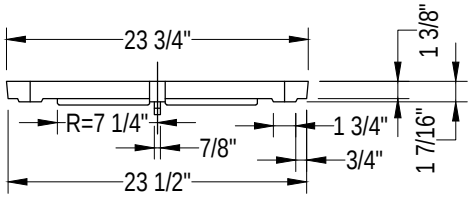

SIDE VIEW

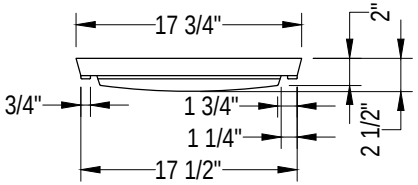

END VIEW

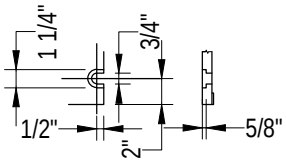

SLOT DETAIL

SEE NOTE ①

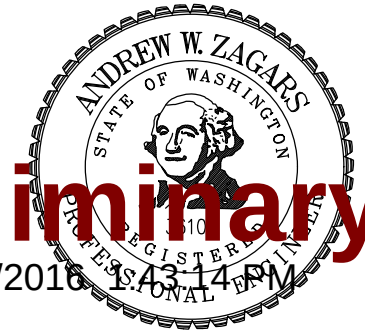

Preliminary

11/09/2016 1:43:14 PM

NOTES:

① SLOT FORMED AND RECESSED FOR 5/8"-11 NC X 2" SOCKET HEAD (ALLEN HEAD) CAP SCREW.

2. ALL CASTINGS SHALL HAVE A BITUMINOUS COATING.

3. GRATE SHALL BE CAST IRON PER ASTM A48 CLASS 30 UNLESS OTHERWISE SPECIFIED.

CITY OF SAMMAMISH
DEPARTMENT OF PUBLIC WORKS

STANDARD GRATE

APPROVED BY
CITY ENGINEER _____ DATE _____

REV	DWN	CKD	DATE	FILE
	XXX	XXX	AUG-XX-2015	FIG07-17

REV. NO. X

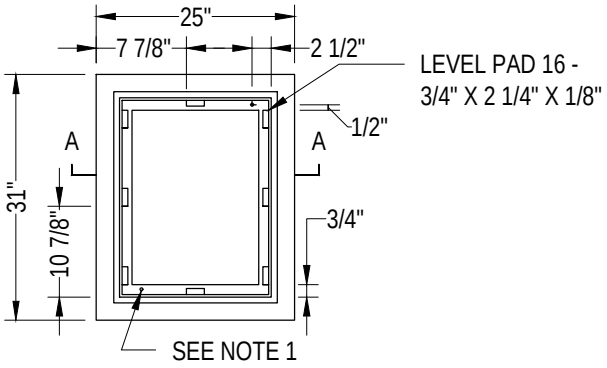

PLAN

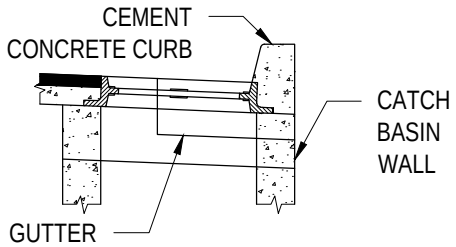

CURB

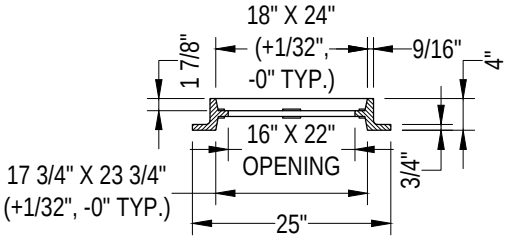

SECTION A-A

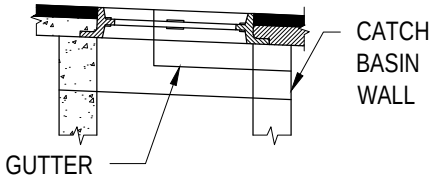

NO CURB

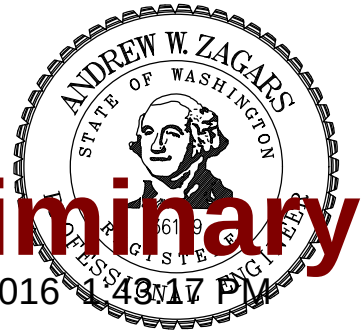

Preliminary

11/09/2016 1:43:17 PM

NOTES:

1. TWO LOCKING BOLTS 5/8"-11 NC STAINLESS TYPE 304 STEEL SOCKET HEAD (ALLEN HEAD) CAP SCREWS 2" LONG WHEN USED WITH SOLID COVER (STND DWG 7-19) OR WHEN SPECIFIED BY ENGINEER.
2. FRAME MATERIAL SHALL BE CAST IRON PER ASTM A48 CLASS 30.
3. SET FRAME TO GRADE & CONSTRUCT ROAD & GUTTER TO BE FLUSH WITH FRAME.

CITY OF SAMMAMISH
DEPARTMENT OF PUBLIC WORKS

STANDARD FRAME INSTALLATION

APPROVED BY
CITY ENGINEER _____ DATE _____

REV	DWN	CKD	DATE	FILE
	XXX	XXX	AUG-XX-2015	FIG07-18

REV. NO. X

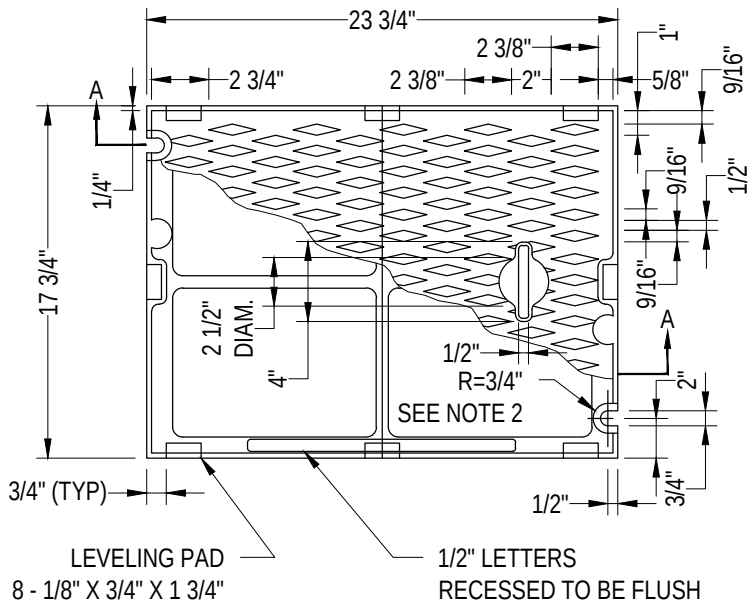

PLAN COVER

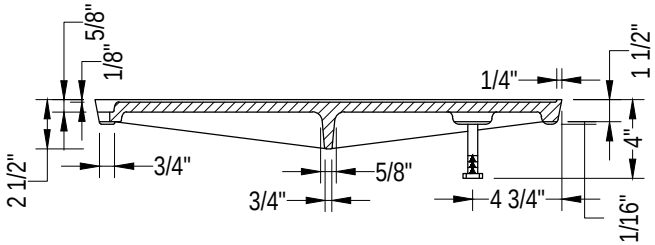

SECTION A-A

NOTES:

1. USE WITH FRAME (SEE STD DWG 7-18) DRILLED & TAPPED FOR LOCKING BOLTS.
2. FOR FRAME AND GRATES WITHIN THE TRAVEL LANE USE, FOUR LOCKING BOLTS.
3. USE WITH TWO LOCKING 5/8"-11 NC STAINLESS STEEL TYPE 304 STEEL SOCKET HEAD (ALLEN HEAD) CAP SCREWS 2" LONG.
4. MATERIAL SHALL BE CAST IRON PER ASTM A48 CLASS 30.

Preliminary

11/09/2016 1:13:21 PM

CITY OF SAMMAMISH
DEPARTMENT OF PUBLIC WORKS

SOLID COVER

APPROVED BY
CITY ENGINEER _____ DATE _____

REV	DWN	CKD	DATE	FILE
	XXX	XXX	AUG-XX-2015	FIG07-19

REV. NO. X

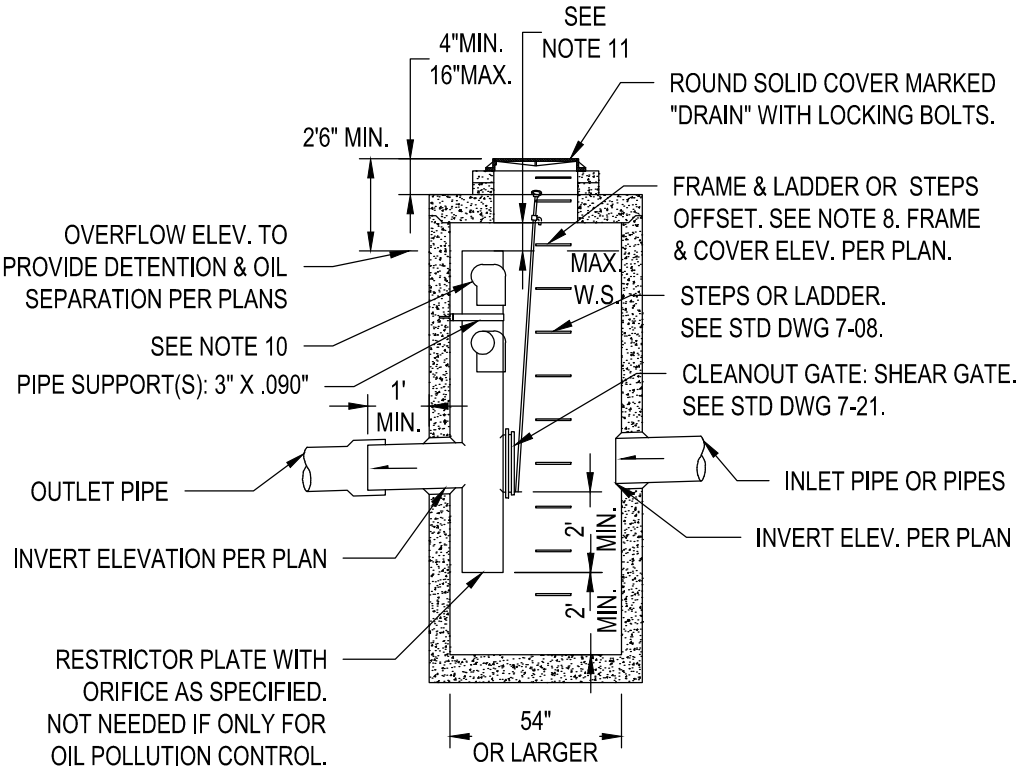

CATCH BASIN TYPE 2

DIAM. AS REQUIRED
SEE STD DWG 7-07.

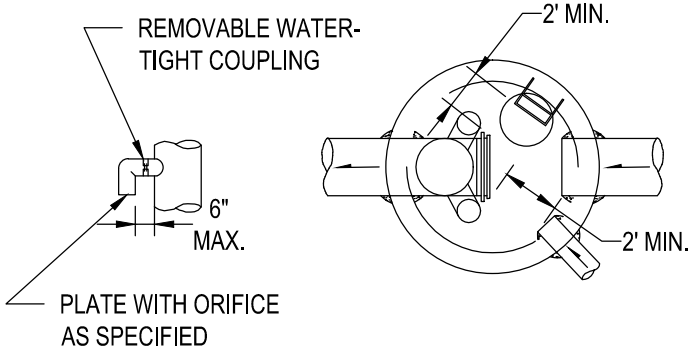

ELBOW DETAIL

PLAN

NOTES:

1. PIPE SIZES AND SLOPES: PER PLANS.
2. OUTLET CAPACITY: NOT LESS THAN COMBINED INLETS.
3. EXCEPT AS SHOWN OR NOTED, UNITS SHALL BE CONSTRUCTED IN ACCORDANCE WITH THE REQUIREMENTS FOR CATCH BASIN TYPE 2, 54" MIN. DIAM.
4. PIPE SUPPORTS AND RESTRICTOR/SEPARATOR SHALL BE OF SAME MATERIAL, AND BE ANCHORED AT 3' MAX. SPACING BY 5/8" DIAM. STAINLESS STEEL EXPANSION BOLTS OR EMBEDDED 2" IN WALL.
5. THE RESTRICTOR/SEPARATOR SHALL BE FABRICATED FROM .060" ALUMINUM, OR .064" ALUMINIZED STEEL.
6. OUTLET SHALL BE CONNECTED TO CULVERT OR SEWER PIPE WITH A STANDARD COUPLING BAND FOR CORRUGATED METAL PIPE, OR GROUTED INTO THE BELL OF CONCRETE PIPE.
7. THE VERTICAL RISER STEM OF THE RESTICTOR/SEPARATOR SHALL BE THE SAME DIAM. AS THE HORIZONTAL OUTLET PIPE, WITH AN 8" MIN. DIAM.
8. FRAME AND LADDER OR STEPS OFFSET SO THAT:
   A. CLEANOUT GATE IS VISIBLE FROM TOP.
   B. CLIMB DOWN SPACE IS CLEAR OF RISER AND CLEANOUT GATE.
   C. FRAME IS CLEAR OF CURB.
9. IF METAL OUTLET PIPE CONNECTS TO CEMENT CONCRETE PIPE: OUTLET PIPE TO HAVE SMOOTH O.D. EQUAL TO CONCRETE PIPE I.D. LESS 1/4".
10. MULTI-ORIFICE ELBOWS MAY BE LOCATED AS SHOWN OR ALL ON ONE SIDE OF RISER TO ASSURE LADDER CLEARANCE.
11. 6" MIN. DEPENDING ON DESIGN SPECIFICATION.

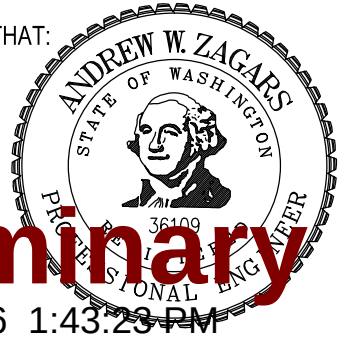

Preliminary
11/09/2016 1:43:23 PM

CITY OF SAMMAMISH
DEPARTMENT OF PUBLIC WORKS

FLOW RESTRICTOR (TEE)

APPROVED BY
CITY ENGINEER _____ DATE _____

REV	DWN	CKD	DATE	FILE
	XXX	XXX	AUG-XX-2015	FIG07-20

REV. NO. X

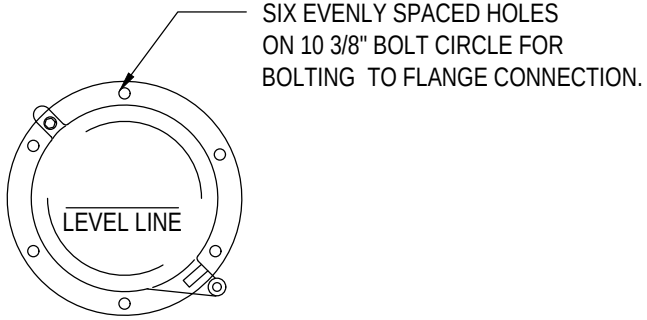

FRONT

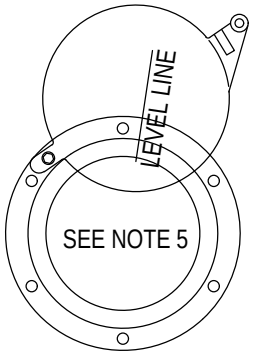

MAXIMUM OPENING OF GATE

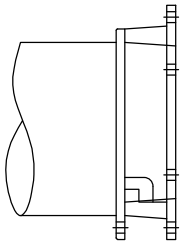

SIDE

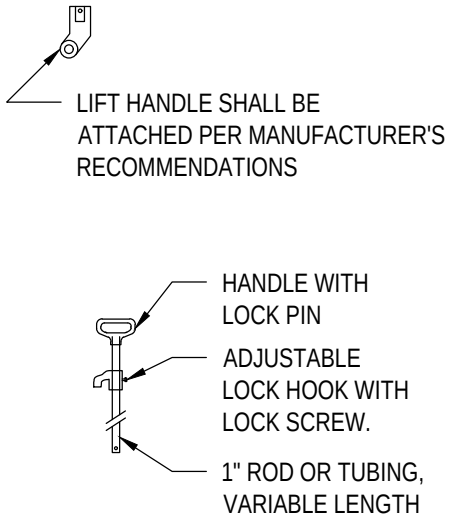

LIFT HANDLE

NOTES:

1. SHEAR GATE SHALL BE ALUMINUM ALLOY PER ASTM B-26-ZG-32a OR CAST IRON ASTM A48 CLASS 308 AS REQUIRED.
2. GATE SHALL BE 8" DIAMETER UNLESS OTHERWISE SPECIFIED.
3. GATE SHALL BE JOINED TO TEE SECTION BY BOLTING (THROUGH FLANGE) OR WELDED.
4. LIFT ROD: AS SPECIFIED BY MANUFACTURER WITH HANDLE EXTENDING TO WITHIN 1 FOOT OF COVER & ADJUSTABLE HOOK LOCK FASTENED TO FRAME OR UPPER HANDHOLD.
5. GATE SHALL NOT OPEN BEYOND THE CLEAR OPENING BY LIMITED HINGE MOVEMENT, STOP TAB, OR SOME OTHER DEVICE.
6. NEOPRENE RUBBER GASKET REQUIRED BETWEEN RISER MOUNTING FLANGE AND GATE FLANGE.
7. MATING SURFACES OF LID AND BODY TO BE MACHINED FOR PROPER FIT.
8. FLANGE MOUNTING BOLTS SHALL BE 3/8" DIAMETER STAINLESS STEEL.
9. ALTERNATIVE CLEANOUT/SHEAR GATES TO THE DESIGN SHOWN ARE ACCEPTABLE, PROVIDED THEY MEET THE MATERIAL SOECIFICATIONS ABOVE AND HAVE A SIX BOLT, 10 3/8" BOLT CIRCLE FOR BOLTING TO THE FLANGE CONNECTION.

Preliminary

11/09/2016 1:43:26 PM

CITY OF SAMMAMISH
DEPARTMENT OF PUBLIC WORKS

FROP-T SHEAR GATE DETAIL

APPROVED BY
CITY ENGINEER _____ DATE _____

REV	DWN	CKD	DATE	FILE
	XXX	XXX	AUG-XX-2015	FIG07-21

REV. NO. X

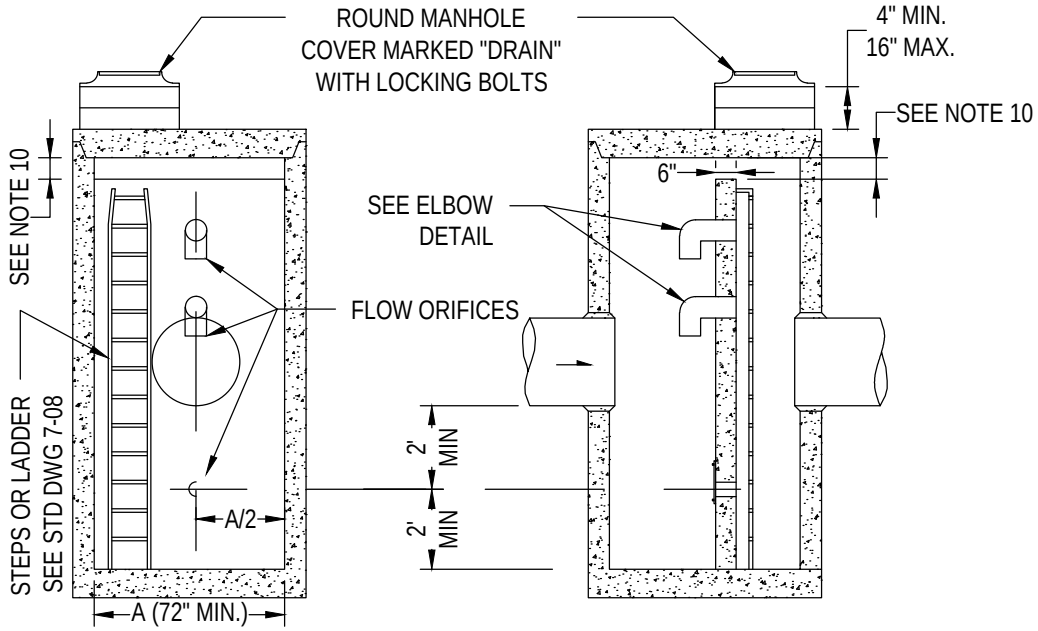

SECTION A-A

ELEVATION

SECTION B-B

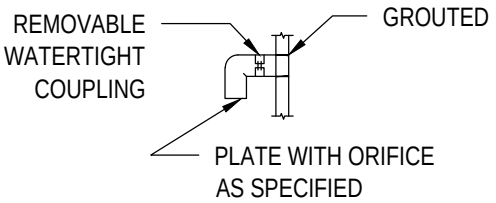

ELBOW DETAIL

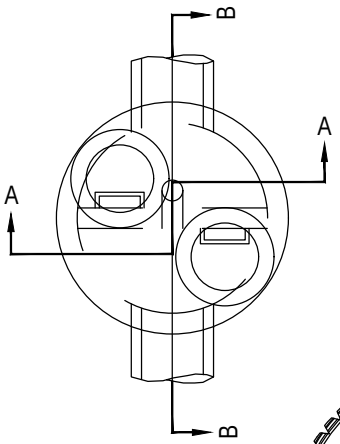

PLAN

NOTES:

1. PIPE SIZE, SLOPES, AND ALL ELEVATIONS: PER PLANS.
2. OUTLET CAPACITY: NOT LESS THAN COMBINED INLETS.
3. CATCH BASIN: TYPE 2 TO BE CONSTRUCTED IN ACCORDANCE WITH STD DWG 7-07 & AASHTO M199 UNLESS OTHERWISE SPECIFIED.
4. COVERS: ROUND, SOLID MARKED "DRAIN" WITH LOCKING BOLTS.
5. ORIFICES: SIZED & LOCATED AS REQUIRED, WITH LOWEST ORIFICE MIN 2" FROM BASE.
6. BAFFLE WALL SHALL HAVE #4 REINFORCEMENT BAR AT 12" SPACING EACH WAY.
7. PRECAST BAFFLE WALL SHALL BE KEYED & GROUTED IN PLACE.
8. BOTTOM ORIFICE PLATE TO BE 1/4" MIN GALVANIZED STEEL & ATTACHED WITH 1/2" STAINLESS STEEL BOLTS. OMIT ORIFICE PLATE ID ONLY FOR OIL SEPARATION.
9. THE RESTRICTOR/SEPARATOR SHALL BE FABRICATED FROM .060" ALUMINUM, OR .064" ALUMINIZED STEEL.
10. 6" MIN. DEPENDING ON DESIGN SPECIFICATION.

Preliminary

11/09/2016 1:43:29 PM

CITY OF SAMMAMISH
DEPARTMENT OF PUBLIC WORKS

FLOW RESTRICTOR (BAFFLE)

APPROVED BY
CITY ENGINEER _____ DATE _____

REV	DWN	CKD	DATE	FILE
	XXX	XXX	AUG-XX-2015	FIG07-22

REV. NO. X

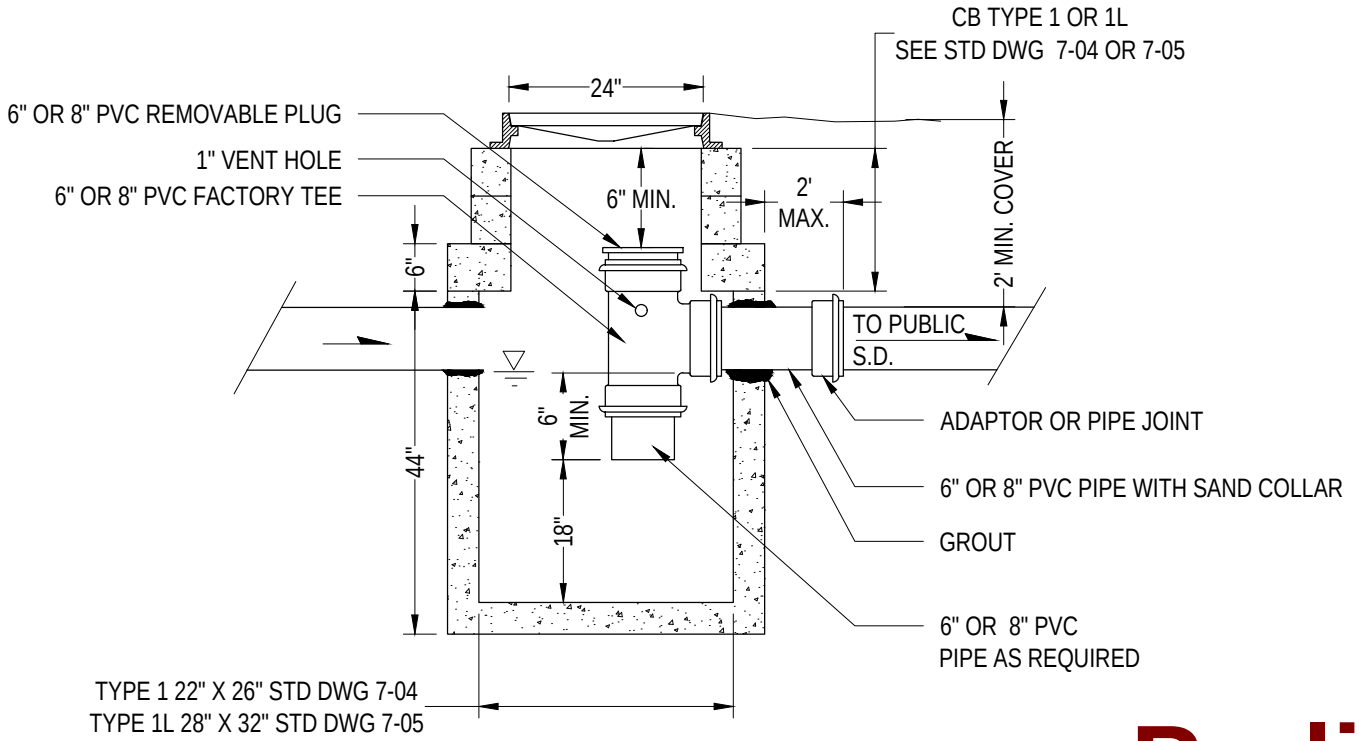

Preliminary

11/09/2016 1:43:31 PM

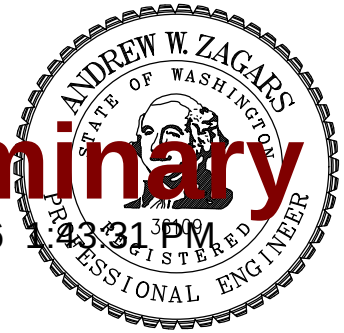

NOTE:

1. MAX. RIM EL. INV. EL. DIFFERANCE GREATER THAN 5' SEE STD DWG 7-15.

2. GROUT ALL JOINTS INSIDE AND OUTSIDE.

CITY OF SAMMAMISH
DEPARTMENT OF PUBLIC WORKS

FLOATABLE MATERIAL
SEPARATOR – 6" OR 8" PIPE

APPROVED BY
CITY ENGINEER _____ DATE _____

REV	DWN	CKD	DATE	FILE
	XXX	XXX	AUG-XX-2015	FIG07-23

REV. NO. X

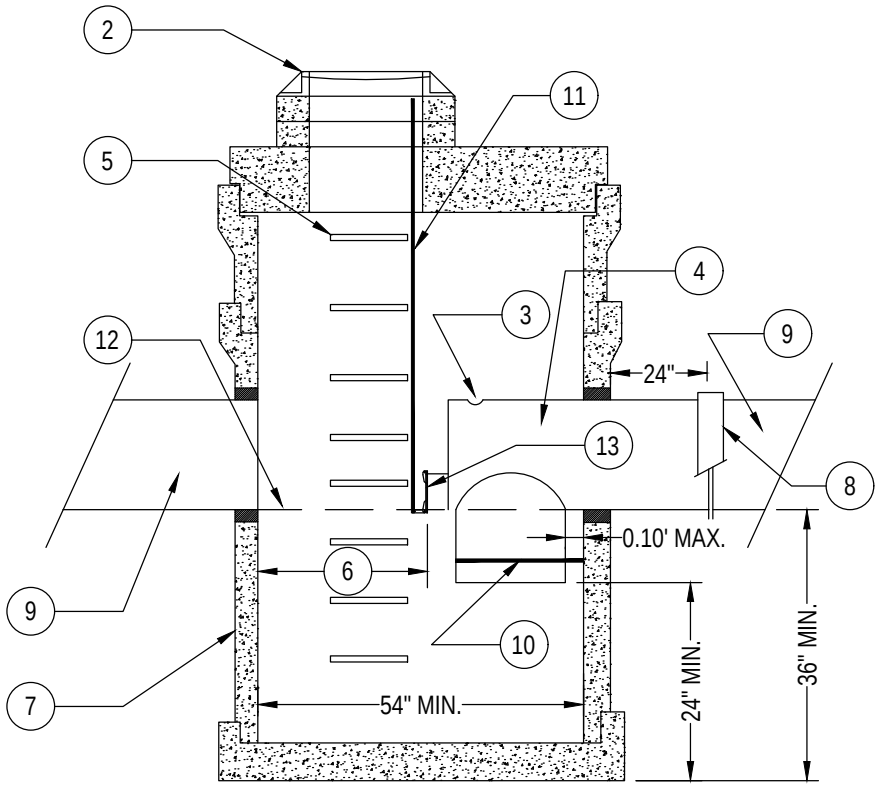

ELEVATION

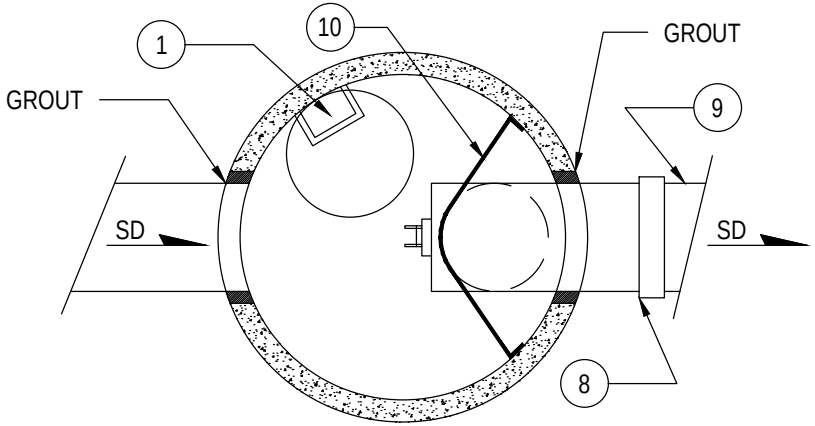

PLAN

NOTES:

1. INSTALL MANHOLE ACCESS SO THAT LIFT GATE IS VISIBLE THROUGH OPENING AND STEPS CLEAR INLET AND RESTRICTOR UNIT.
2. INSTALL SOLID LID WITH LOCKING COVER, FOR MANHOLES OR WHEN IT IS TO BE A CATCH BASIN THEN USE STD DWG 7-06.
3. 1" VENT HOLE.
4. SEPARATOR ASSEMBLY.
5. POLYPROPYLENE LADDER OR STEPS: SEE STD DWG 7-08.
6. MIN CLEARANCE: 36" FOR OUTLETS OF 24" AND LARGER 18" FOR OUTLETS OF 18" AND SMALLER.
7. 54" TYPE 2 CB OR LARGER.
8. BAND STRAP WITH GASKET.
9. SEE PLAN AND SPECIFICATIONS FOR SIZE AND TYPE OF PIPE ENTERING AND EXITING CB.
10. SECURE SEPARATOR TO CB WITH 8 STAINLESS STEEL STRAP. BOLT TO CB WALL WITH STAINLESS STEEL ANCHOR BOLTS AND TACK WELD TO SEPARATOR UNIT.
11. SHEAR GATE LIFT HANDLE SEE STD DWG 7-21.
12. INV. EL.: SEE PLANS AND SPECIFICATIONS.
13. SHEAR LATE CLEAN OUT, 8" MIN. DIA., 12" DIA. FOR 24" DIA. AND LARGER OUTLET PIPE.
14. GROUT ALL JOINTS INSIDE AND OUTSIDE.

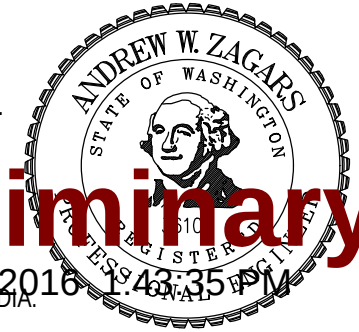

Preliminary
11/09/2016 1:43:35 PM

CITY OF SAMMAMISH
DEPARTMENT OF PUBLIC WORKS

FLOATABLE MATERIAL
SEPARATOR – 12" & LARGER

APPROVED BY
CITY ENGINEER _____ DATE _____

REV	DWN	CKD	DATE	FILE
	XXX	XXX	AUG-XX-2015	FIG07-24

REV. NO. X

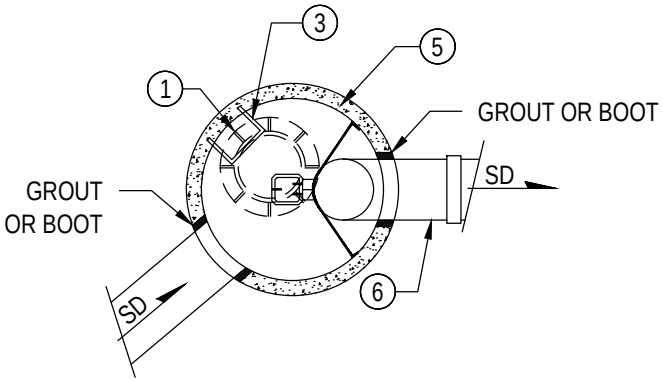

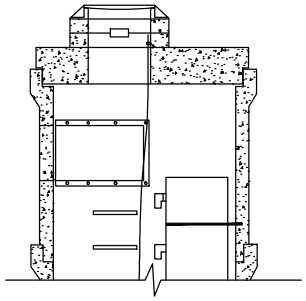

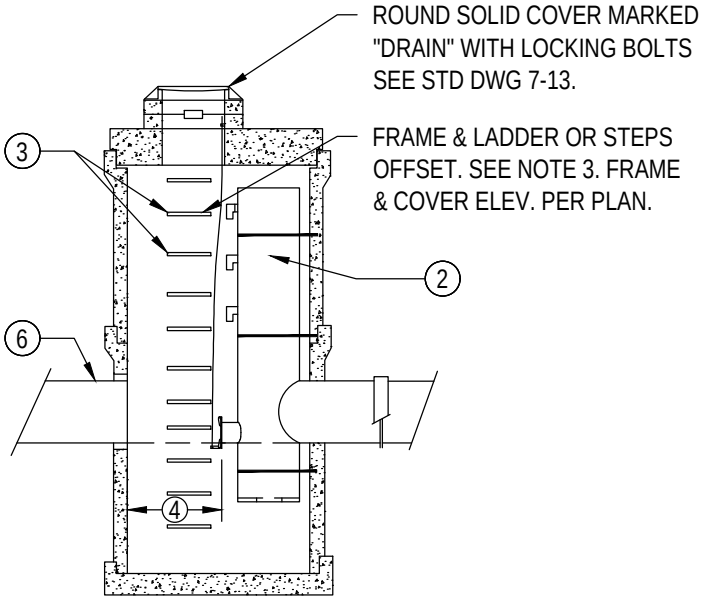

ELEVATION

NOTES:

1. INSTALL 1-24" DIA. MH. ACCESS PER STD DWG 7-12, SO THAT THE LIFT GATE IS VISIBLE AND THE STEPS ARE CLEAR AND DIRECTLY ACCESSIBLE.

2. FLOW RESTRICTOR UNIT - SEE STD DWG 7-20.

3. POLYPROPLENE PLASTIC STEP OR LADDER, SEE STND DWG 7-08. OFFSET STEPS OR LADDER FROM FRAME SO THAT:
   A. CLEANOUT GATE IS VISIBLE FROM TOP.
   B. CLIMB DOWN SPACE IS CLEAR OF RISER AND CLEANOUT GATE.
   C. FRAME IS CLEAR OF CURB.

4. MIN CLEARANCE: 36" FOR OUTLETS OF 24" AND LARGER 18" FOR OUTLETS OF 18" AND SMALLER.

5. 54" OR 60" TYPE 2 CB.

6. SEE PLAN AND SPECIFICATIONS FOR SIZE AND TYPE OF PIPES ENTERING AND EXITING CB.

Preliminary

11/09/2016 1:43:39 PM

CITY OF SAMMAMISH
DEPARTMENT OF PUBLIC WORKS

CONTROL STRUCTURE –
54" DIAMETER

APPROVED BY
CITY ENGINEER _____ DATE _____

REV	DWN	CKD	DATE	FILE
	XXX	XXX	AUG-XX-2015	FIG07-25

REV. NO. X

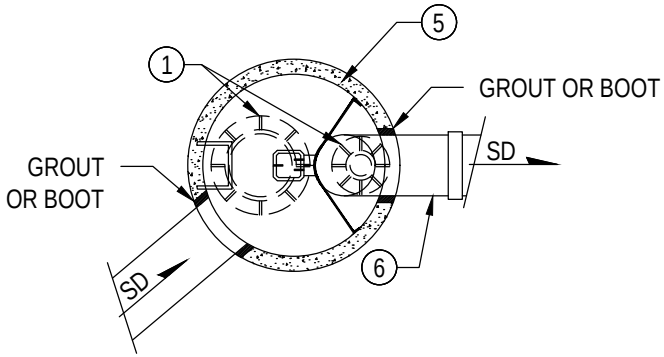

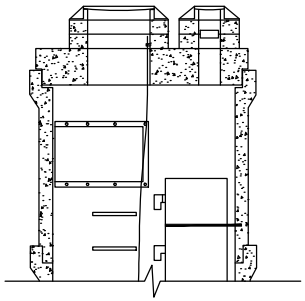

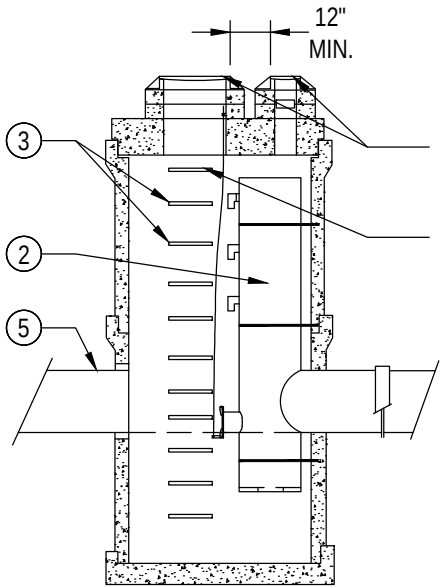

ROUND SOLID COVER MARKED "DRAIN"
WITH LOCKING BOLTS SEE STD DWG 7-13.

FRAME & LADDER OR STEPS OFFSET.
SEE NOTE 3. FRAME & COVER ELEV. PER PLAN.

ELEVATION

NOTES:

1. INSTALL 1-18" AND 1-24" DIA. MH. ACCESS PER STD DWG 7-12, SO THAT THE LIFT GATE IS VISIBLE AND THE STEPS ARE CLEAR AND DIRECTLY ACCESSIBLE.

2. FLOW RESTRICTOR UNIT - SEE STD DWG 7-20.

3. POLYPROPLENE PLASTIC STEP OR LADDER, SEE STND DWG 7-08. OFFSET STEPS OR LADDER FROM FRAME SO THAT:
   A. CLEANOUT GATE IS VISIBLE FROM TOP.
   B. CLIMB DOWN SPACE IS CLEAR OF RISER AND CLEANOUT GATE.
   C. FRAME IS CLEAR OF CURB.

4. 70" TYPE 2 CB OR LARGER.

5. SEE PLAN AND SPECIFICATIONS FOR SIZE AND TYPE OF PIPES ENTERING AND EXITING CB.

Preliminary
11/09/2016 1:43:42 PM

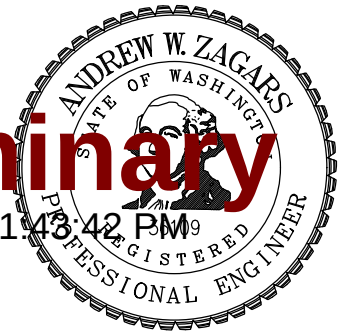

CITY OF SAMMAMISH
DEPARTMENT OF PUBLIC WORKS

CONTROL STRUCTURE – 72" DIAMETER OR LARGER

APPROVED BY
CITY ENGINEER _____ DATE _____

REV	DWN	CKD	DATE	FILE
	XXX	XXX	AUG-XX-2015	FIG07-26

REV. NO. X

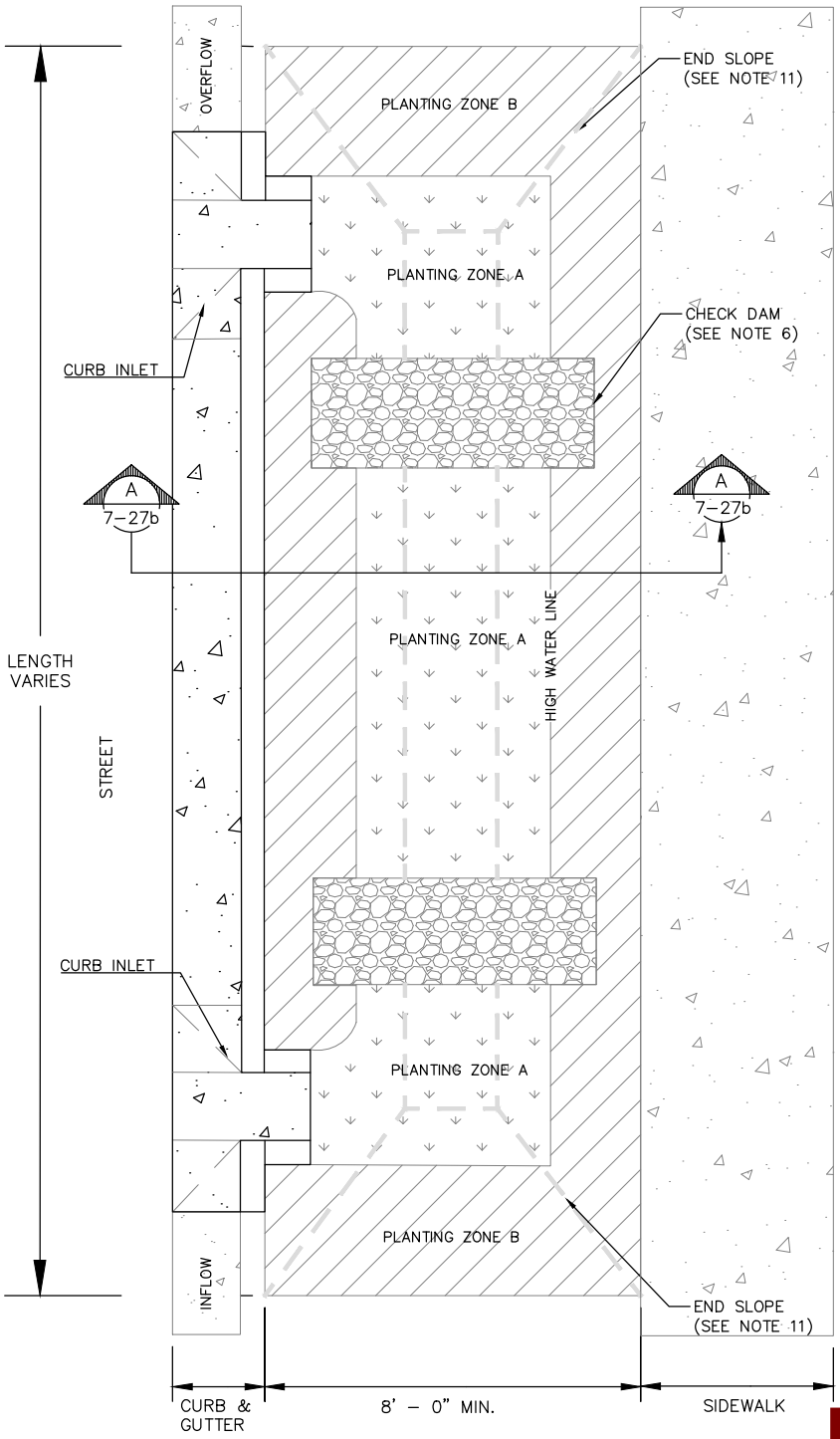

NOTES:

1. AREA AND DEPTH OF FACILITY ARE BASED UPON ENGINEERING CALCULATIONS AND RIGHT OF WAY CONSTRAINTS.
2. LONGITUDINAL SLOPE OF SWALE MATCHES ROAD.
3. INCLUDE BEGINNING AND ENDING STATIONS FOR EACH FACILITY. PROVIDE STATIONS AND ELEVATIONS AT EVERY INLET, OUTLET, AND CHECK DAM.
4. SIDEWALK ELEVATION MUST BE SET ABOVE INLET AND OUTLET ELEVATIONS TO ALLOW OVERFLOW TO DRAIN TO STREET BEFORE SIDEWALK.
5. SEE SHEET 3-09a FOR CURB INLET DETAILS.
6. CHECK DAMS MAYBE REQUIRED.
7. SEE CITY SURFACE WATER DESIGN MANUAL FOR FACILITY MEDIA REQUIREMENTS.
8. SPECIAL REQUIREMENTS FOR WATER LINES, METERS, AND FIRE HYDRANTS, SEE WATER DISTRICT REQUIREMENTS.
9. UTILITY LINES MAY NEED TO BE SLEEVED OR RELOCATED.
10. CURB AND GUTTER STANDARD DRAWING.
11. END SLOPES OF SWALE SHALL BE A MINIMUM OF 1:3.
12. 24" DEEP ROOT BARRIER REQUIRED WITH TREE PLANTINGS.

IMPORTANT: Utility conflicts and existing conditions can create major design variables. Locate utilities and survey existing conditions prior to beginning design work.

Preliminary
11/09/2016 1:43:45 PM

PLAN VIEW

-NOT TO SCALE-

CITY OF SAMMAMISH
DEPARTMENT OF PUBLIC WORKS

SWALE
BIORETENTION

APPROVED BY
CITY ENGINEER _____ DATE _____

REV	DWN	CKD	DATE	FILE
	LG		SEPT-7-2016	7-27a

REV. NO. X

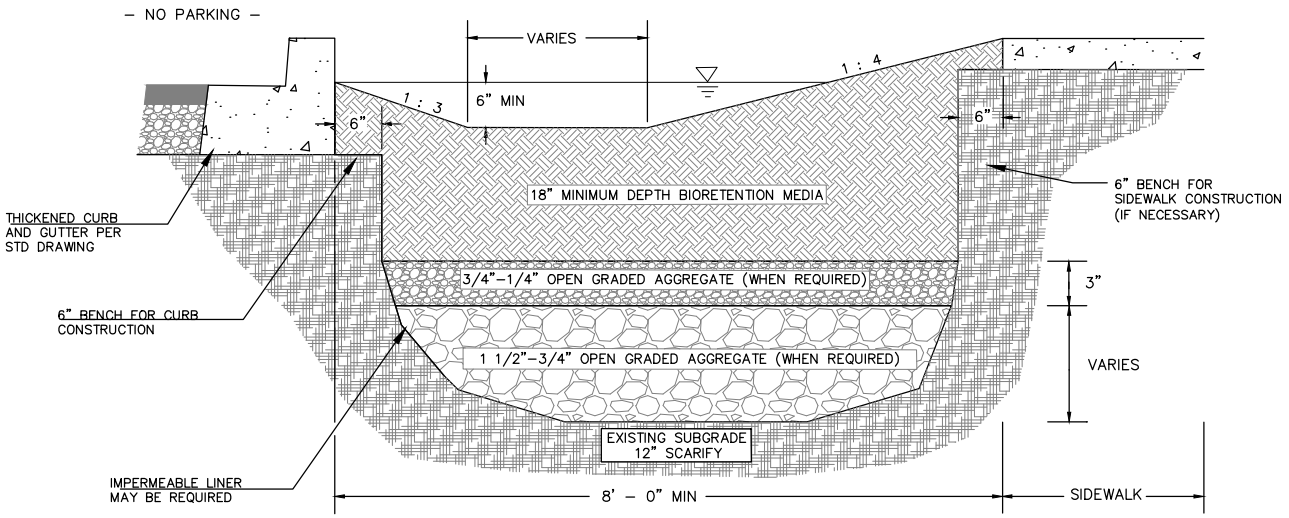

SECTION A–A
BIORETENTION WITHOUT PARKING

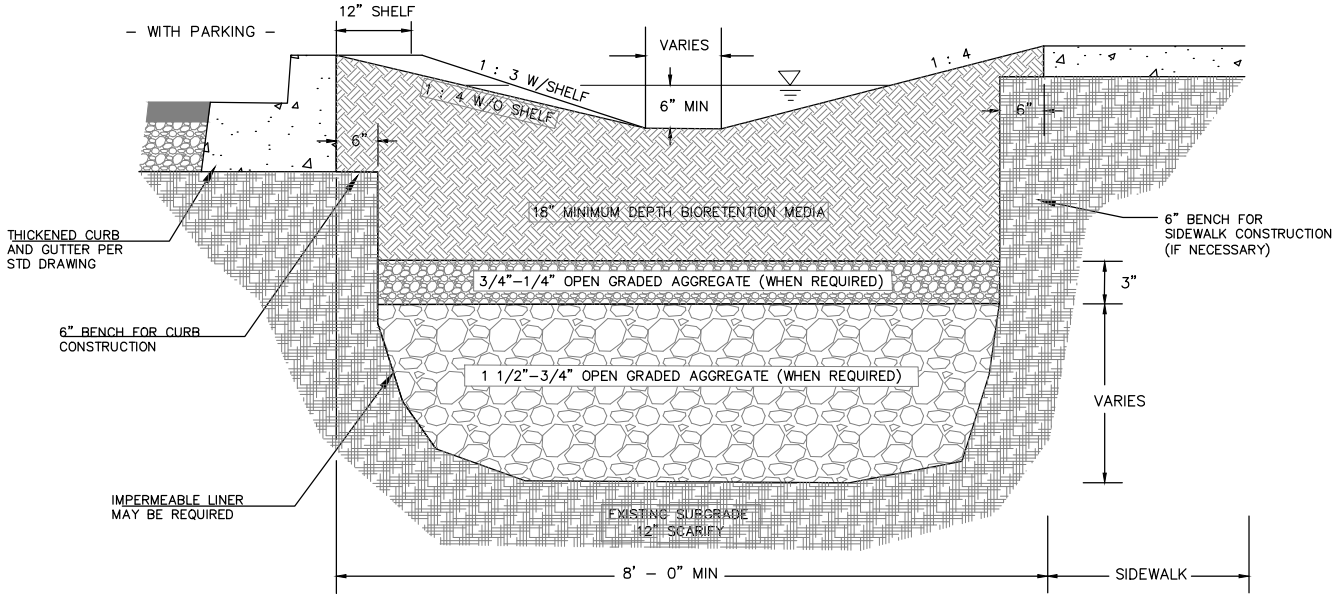

SECTION A–A
BIORETENTION WITH PARKING

Preliminary
11/09/2016 1:43:50 PM

–NOT TO SCALE–

CITY OF SAMMAMISH
DEPARTMENT OF PUBLIC WORKS

SWALE SECTION
BIORETENTION

APPROVED BY
CITY ENGINEER _____ DATE _____

REV	DWN	CKD	DATE	FILE
	LG		SEPT–7–2016	7–27b

REV. NO. X

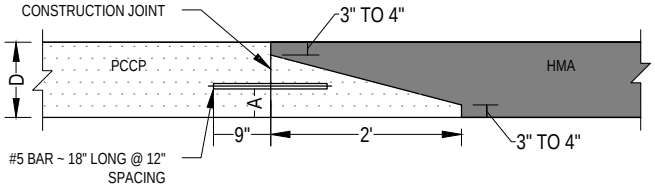

ELEVATION VIEW
HMA TRANSITION DETAIL

SLAB THICKNESS (D)	A
12"	5"
D	D/2 - 1"

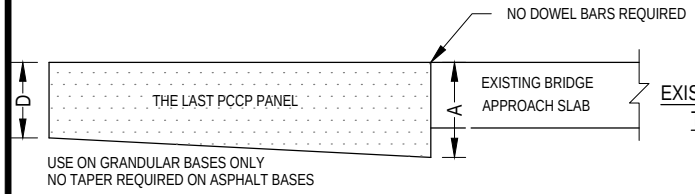

ELEVATION VIEW
EXISTING APPROACH SLAB
TRANSITION DETAIL

SLAB THICKNESS (D)	A
12"	15"
D	1.25" - D

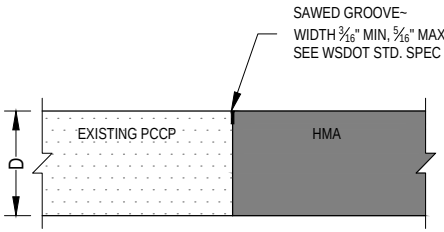

SECTION VIEW
PCCP TO HMA
LONGITUDINAL JOINT

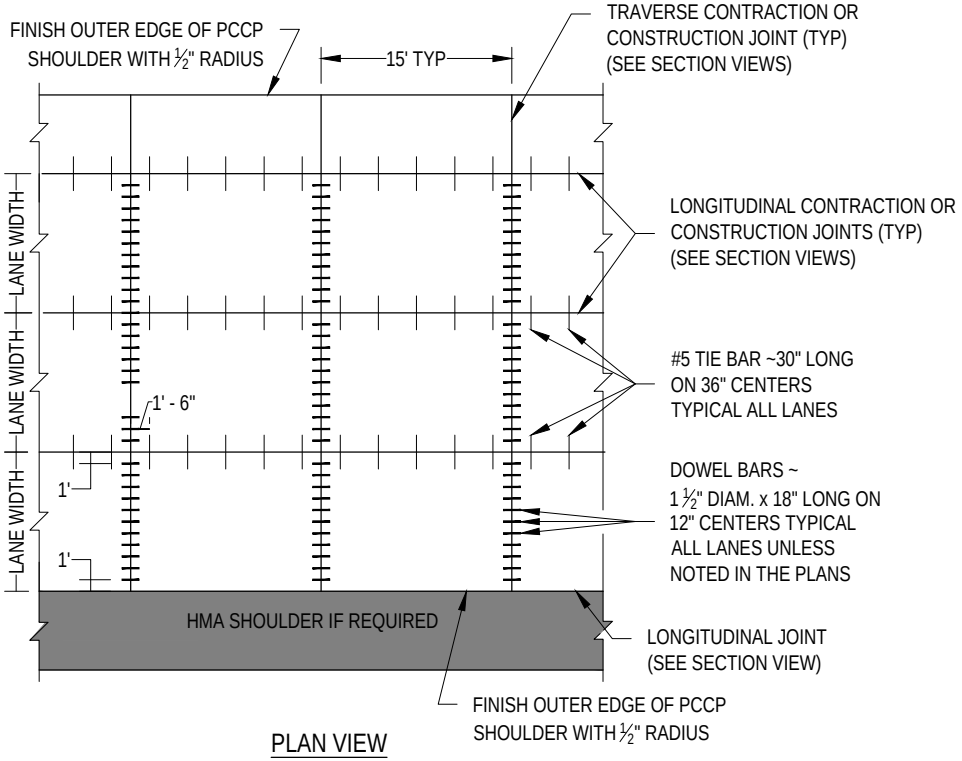

PLAN VIEW

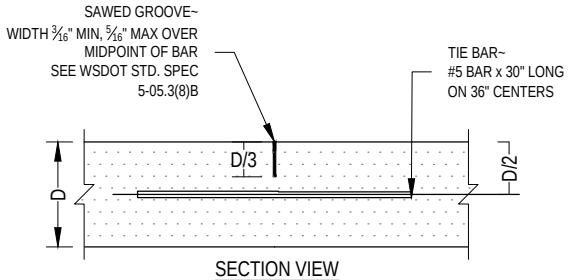

SECTION VIEW
LONGITUDINAL CONTRACTION JOINT

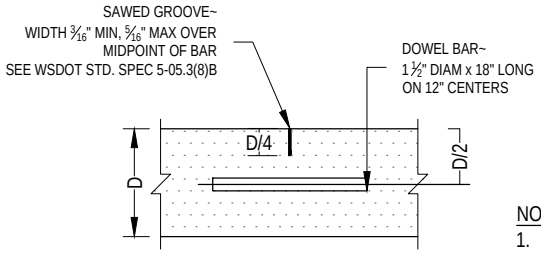

SECTION VIEW
TRAVERSE CONTRACTION JOINT

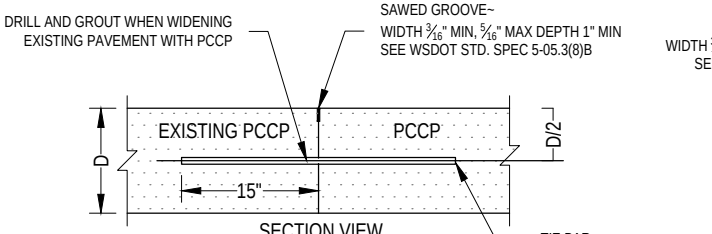

SECTION VIEW
PCCP TO PCCP
LONGITUDINAL CONTRACTION JOINT

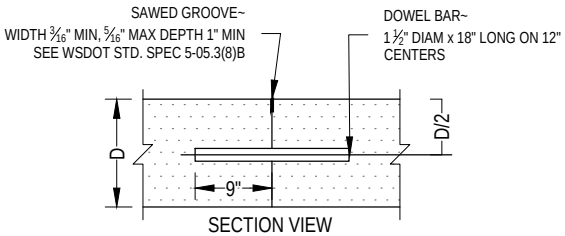

SECTION VIEW
TRAVERSE CONSTRUCTION JOINT

Preliminary
11/09/2016 1:43:53 PM

NOTES:
1. MATERIAL - WSDOT CONCRETE CLASS 4000psi.

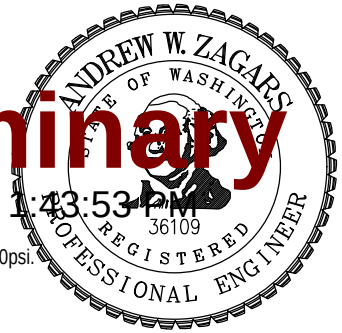

CITY OF SAMMAMISH
DEPARTMENT OF PUBLIC WORKS

RIGID PAVEMENT
RESTORATION DETAILS

APPROVED BY
CITY ENGINEER _____ DATE _____

REV	DWN	CKD	DATE	FILE
	XXX	XXX	AUG-XX-2015	FIG08-01

REV. NO. X

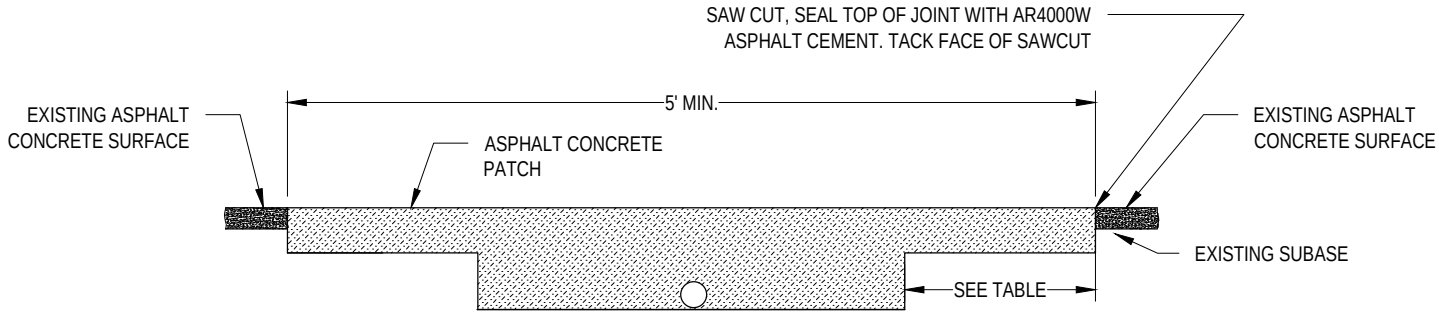

NOTES:

1. ASPHALT CONCRETE MIX SHALL BE HMA CL 1/2 INCH.
2. ASPHALT PATCHING AND TRENCH BACKFILL PER STD DWG 02-05A.
3. SAW CUTS LIMITS MAY BE REVISED BASED UPON EXISTING CONDITIONS. PATCH MAY NEED TO EXTEND TO CONFIDENT ASPHALT.
4. SAWCUTS NEED TO BE NEAT AND CLEAN PRIOR TO PAVING.

PAVEMENT CUT DIMENSIONS	
TRENCH DEPTH (FT)	MINIMUM CUT BEYOND TRENCH (FT) ALL FOUR SIDES
10	2.5
12	3.0
14	3.5
16	4.0
18	4.5
20	5.0
PAVEMENT LESS THAN 5 YEARS OLD	ADDITIONAL RESTORATION WORK MAY BE REQUIRED

Preliminary

11/09/2016 1:43:56 PM

CITY OF SAMMAMISH
DEPARTMENT OF PUBLIC WORKS

FLEXIBLE PAVEMENT PATCHING

APPROVED BY
CITY ENGINEER _____ DATE _____

REV	DWN	CKD	DATE	FILE
	XXX	XXX	AUG-XX-2015	FIG08-02

REV. NO. X

BUFFER DATA										
LONGITUDINAL BUFFER SPACE = B										
SPEED (MPH)	25	30	35	40	45	50	55	60	65	70
LENGTH (FEET)	155	200	250	305	360	425	495	570	645	-

BUFFER VEHICLE ROLL AHEAD DISTANCE = R	
TRANSPORTABLE ATTENUATOR MINIMUM HOST VEHICLE WEIGHT 15,000 LBS. THE MAXIMUM WEIGHT SHALL BE IN ACCORDANCE WITH THE MANUFACTURERS RECOMMENDATION.	30 FEET MIN. TO 100 FEET MAX.
PROTECTIVE VEHICLE MAY BE A WORK VEHICLE STRATEGICALLY LOCATED TO SHIELD THE WORK AREA.	NO SPECIFIED DISTANCE REQUIRED

SIGN SPACING = X (1)		
RURAL HIGHWAYS	60 / 65 MPH	800' ±
RURAL ROADS	45 / 55 MPH	500' ±
RURAL ROADS & URBAN ARTERIALS	35 / 40 MPH	350' ±
RURAL ROADS, URBAN ARTERIALS, RESIDENTIAL & BUSINESS DISTRICTS	25 / 30 MPH	200' ± (2)
URBAN STREETS	25 MPH OR LESS	100' ± (2)

(1) ALL SPACING MAY BE ADJUSTED TO ACCOMMODATE INTERSECTIONS AND DRIVEWAYS.
(2) THIS SPACING MAY BE REDUCED IN URBAN AREAS TO FIT ROADWAY CONDITIONS.

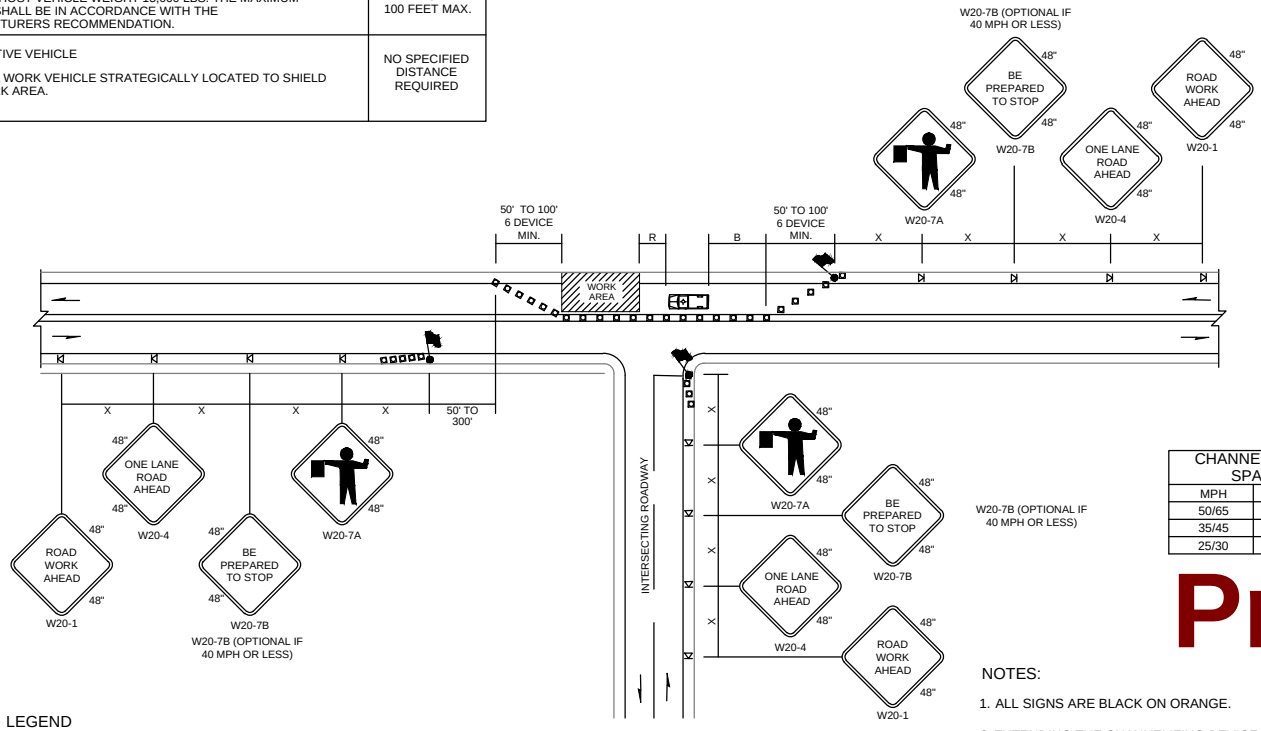

CHANNELIZATION DEVICE SPACING (FEET)		
MPH	TAPER	TANGENT
50/65	10 TO 20	80
35/45	10 TO 20	60
25/30	10 TO 20	40

LEGEND

- FLAGGING STATION
- TEMPORARY SIGN LOCATION
- CHANNELIZING DEVICES
- PROTECTIVE VEHICLE

ONE-LANE, TWO-WAY TRAFFIC CONTROL

WITH FLAGGERS

NOT TO SCALE

NOTES:

1. ALL SIGNS ARE BLACK ON ORANGE.
2. EXTENDING THE CHANNELIZING DEVICE TAPER ACROSS SHOULDER IS RECOMMENDED.
3. NIGHT WORK REQUIRES ADDITIONAL ROADWAY LIGHTING AT FLAGGING STATIONS. SEE THE WSDOT STD SPECIFICATIONS FOR ADDITIONAL DETAILS.
4. SEE SPECIAL PROVISIONS FOR WORK HOUR RESTRICTIONS.

Preliminary

11/09/2016 1:43:59 PM

STATE OF WASHINGTON 36109 REGISTERED PROFESSIONAL ENGINEER

CITY OF SAMMAMISH
DEPARTMENT OF PUBLIC WORKS

ONE-LANE, TWO-WAY TRAFFIC CONTROL WITH FLAGGERS

APPROVED BY
CITY ENGINEER _____ DATE _____

REV	DWN	CKD	DATE	FILE
	XXX	XXX	AUG-XX-2015	FIG09-01

REV. NO. X

MINIMUM TAPER LENGTH = L (feet)										
LANE WIDTH (feet)	Posted Speed (mph)									
	25	30	35	40	45	50	55	60	65	70
10	105	150	205	270	450	500	550	-	-	-
11	115	165	225	295	495	550	605	660	-	-
12	125	180	245	320	540	600	660	720	780	-

CHANNELIZATION DEVICE SPACING (feet)		
MPH	TAPER	TANGENT
50/65	40	80
35/45	30	60
25/30	20	40

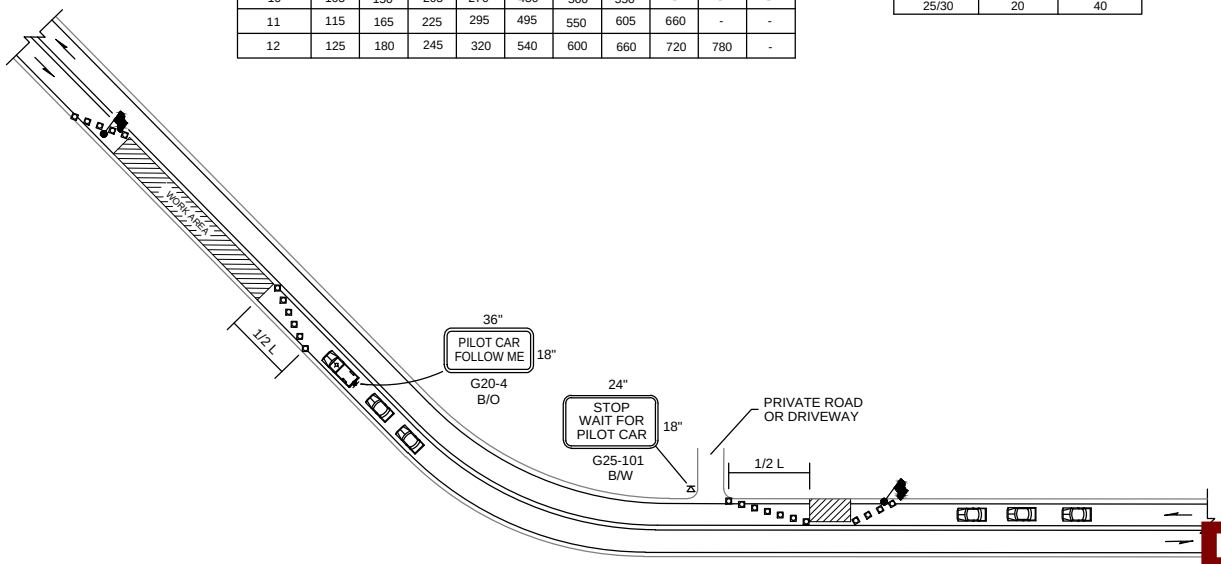

LEGEND

- FLAGGING STATION
- TEMPORARY SIGN LOCATION
- CHANNELIZING DEVICES
- PILOT VEHICLE
- MOTORIST VEHICLE

NOTES:

1. SEE STD DWG 9-01 FOR ADDITIONAL SIGNING AND FLAGGING DETAILS NOT SHOWN.
2. CHANNELIZING DEVICES ARE RECOMMENDED ALONG CENTERLINE TO SEPARATE TRAFFIC FROM WORK OPERATION. DEVICES ARE REQUIRED AT TAPERS TO SHIFT TRAFFIC MOVEMENT BETWEEN LANES AND TO PROTECT FLAGGING STATIONS.
3. SIGN G25-101 IS RECOMMENDED FOR NON-STOP SIGN CONTROLLED APPROACHES SUCH AS PRIVATE ROADS AND DRIVEWAYS. THIS SIGN IS NOT REQUIRED TO BE ALUMINUM SUBSTRATE AND CAN BE MADE OF ALTERNATIVE MATERIALS.

Preliminary
11/09/2016 11:44:02 PM

CITY OF SAMMAMISH
DEPARTMENT OF PUBLIC WORKS

PILOT CAR OPERATION

APPROVED BY
CITY ENGINEER _____ DATE _____

REV	DWN	CKD	DATE	FILE
	XXX	XXX	AUG-XX-2015	FIG09-02

REV. NO. X

MINIMUM LANE CLOSURE TAPER LENGTH = L (feet)										
LANE WIDTH (feet)	Posted Speed (mph)									
	25	30	35	40	45	50	55	60	65	70
10	105	150	205	270	450	500	550	-	-	-
11	115	165	225	295	495	550	605	660	-	-
12	125	180	245	320	540	600	660	720	780	840

MINIMUM SHOULDER TAPER LENGTH = L/3 (feet)										
SHOULDER WIDTH (feet)	Posted Speed (mph)									
	25	30	35	40	45	50	55	60	65	70
8'	40	40	60	90	120	130	150	160	170	190
10'	40	60	90	90	150	170	190	200	220	240
USE A MINIMUM 3 DEVICES TAPER FOR SHOULDER LESS THEN 8'.										

SIGN SPACING = X (1)		
FREEWAYS & EXPRESSWAYS	55 / 70 MPH	1500' ±
RURAL HIGHWAYS	60 / 65 MPH	800' ±
RURAL ROADS	45 / 55 MPH	500' ±
RURAL ROADS & URBAN ARTERIALS	35 / 40 MPH	350' ±
RURAL ROADS & URBAN ARTERIALS RESIDENTIAL & BUSINESS DISTRICTS	25 / 30 MPH	200' ± (2)
URBAN STREETS	25 MPH OR LESS	100' ± (2)

(1) ALL SPACING MAY BE ADJUSTED TO ACCOMMODATE INTERCHANGE RAMPS, AT-GRADE INTERSECTIONS AND DRIVEWAYS.
(2) THIS SPACING MAY BE REDUCED IN URBAN AREAS TO FIT ROADWAY CONDITIONS.

BUFFER DATA										
LONGITUDINAL BUFFER SPACE = B										
	25	30	35	40	45	50	55	60	65	70
LENGTH (feet)	155	200	250	305	360	425	495	570	645	730
BUFFER VEHICLE ROLL AHEAD DISTANCE = R										
TRANSPORTABLE ATTENUATOR MINIMUM HOST VEHICLE WEIGHT 15,000 LBS. THE MAXIMUM WEIGHT SHALL BE IN ACCORDANCE WITH THE MANUFACTURERS RECOMMENDATION.									30 FEET MIN. TO 100 FEET MAX.	

CHANNELIZATION DEVICE SPACING (feet)		
MPH	TAPER	TANGENT
50/70	40	80
35/45	30	60
25/30	20	40

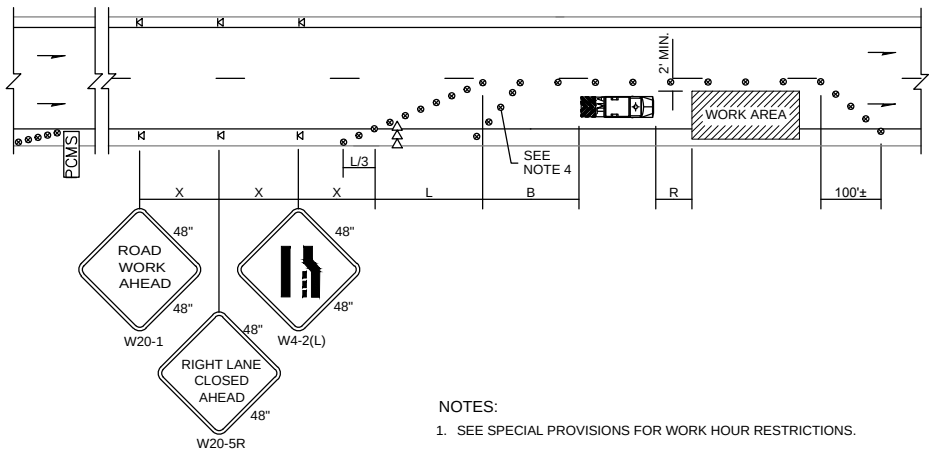

PCMS	
1	2
RIGHT LANE CLOSURE	1 MILE AHEAD
2.0 SEC	2.0 SEC

FIELD LOCATE 1 MILE ± IN ADVANCE OF LANE CLOSURE SIGNING.

LEGEND

- TEMPORARY SIGN LOCATION
- TRAFFIC SAFETY DRUM
- SEQUENTIAL ARROW SIGN
- TRANSPORTABLE ATTENUATOR
- PCMS — PORTABLE CHANGEABLE MESSAGE SIGN

NOTES:

1. SEE SPECIAL PROVISIONS FOR WORK HOUR RESTRICTIONS.
2. EXTEND DEVICE TAPER AT L/3 ACROSS SHOULDER.
3. DEVICES SHALL NOT ENCROACH INTO THE ADJACENT LANE.
4. USE TRANSVERSE DEVICES IN CLOSED LANE EVERY 1000' (FT) (RECOMMENDED).
5. DEVICE SPACING FOR THE DOWNSTREAM TAPER SHALL BE 20' (FT).
6. ALL SIGNS ARE BLACK ON ORANGE.

Preliminary

11/09/2016 1:44:06 PM

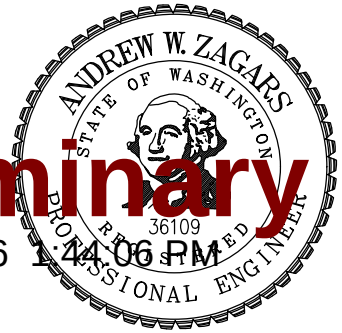

CITY OF SAMMAMISH
DEPARTMENT OF PUBLIC WORKS

SINGLE-LANE CLOSURE FOR MULTI-LANE ROADWAYS

APPROVED BY
CITY ENGINEER _____ DATE _____

REV	DWN	CKD	DATE	FILE
	XXX	XXX	AUG-XX-2015	FIG09-03

REV. NO. X

MINIMUM LANE CLOSURE TAPER LENGTH = L (feet)										
LANE WIDTH (feet)	Posted Speed (mph)									
	25	30	35	40	45	50	55	60	65	70
10	105	150	205	270	450	500	550	-	-	-
11	115	165	225	295	495	550	605	660	-	-
12	125	180	245	320	540	600	660	720	780	840

MINIMUM SHOULDER TAPER LENGTH = L/3 (feet)										
SHOULDER WIDTH (feet)	Posted Speed (mph)									
	25	30	35	40	45	50	55	60	65	70
8'	40	40	60	90	120	130	150	160	170	190
10'	40	60	90	90	150	170	190	200	220	240
USE A MINIMUM 3 DEVICES TAPER FOR SHOULDER LESS THEN 8'.										

SIGN SPACING = X (1)		
FREEWAYS & EXPRESSWAYS	55 / 70 MPH	1500' ±
RURAL HIGHWAYS	60 / 65 MPH	800' ±
RURAL ROADS	45 / 55 MPH	500' ±
RURAL ROADS & URBAN ARTERIALS	35 / 40 MPH	350' ±
RURAL ROADS & URBAN ARTERIALS RESIDENTAL & BUSINESS DISTREICTS	25 / 30 MPH	200' ± (2)
URBAN STREETS	25 MPH OR LESS	100' ± (2)

(1) ALL SPACING MAY BE ADJUSTED TO ACCOMMODATE INTERCHANGE RAMPS, AT-GRADE INTERSECTIONS AND DRIVEWAYS.
(2) THIS SPACING MAY BE REDUCED IN URBAN AREAS TO FIT ROADWAY CONDITIONS.

CHANNELIZATION DEVICE SPACING (feet)		
MPH	TAPER	TANGENT
50/70	40	80
35/45	30	60
25/30	20	40

PCMS	
1	2
2 LANES CLOSED AHEAD	WATCH FOR SLOW TRAFFIC
2.0 SEC	2.0 SEC

FIELD LOCATE 1 MILE IN ADVANCE OF LANE CLOSURE SIGNING.

BUFFER DATA										
LONGITUDINAL BUFFER SPACE = B										
SPEED (MPH)	25	30	35	40	45	50	55	60	65	70
LENGTH (feet)	155	200	250	305	360	425	495	570	645	730
BUFFER VEHICLE ROLL AHEAD DISTANCE = R										
TRANSPORTABLE ATTENUATOR MINIMUM HOST VEHICLE WEIGHT 15,000 LBS. THE MAXIMUM WEIGHT SHALL BE IN ACCORDANCE WITH THE MANUFACTURERS RECOMMENDATION.									30 FEET MIN. TO 100 FEET MAX.	

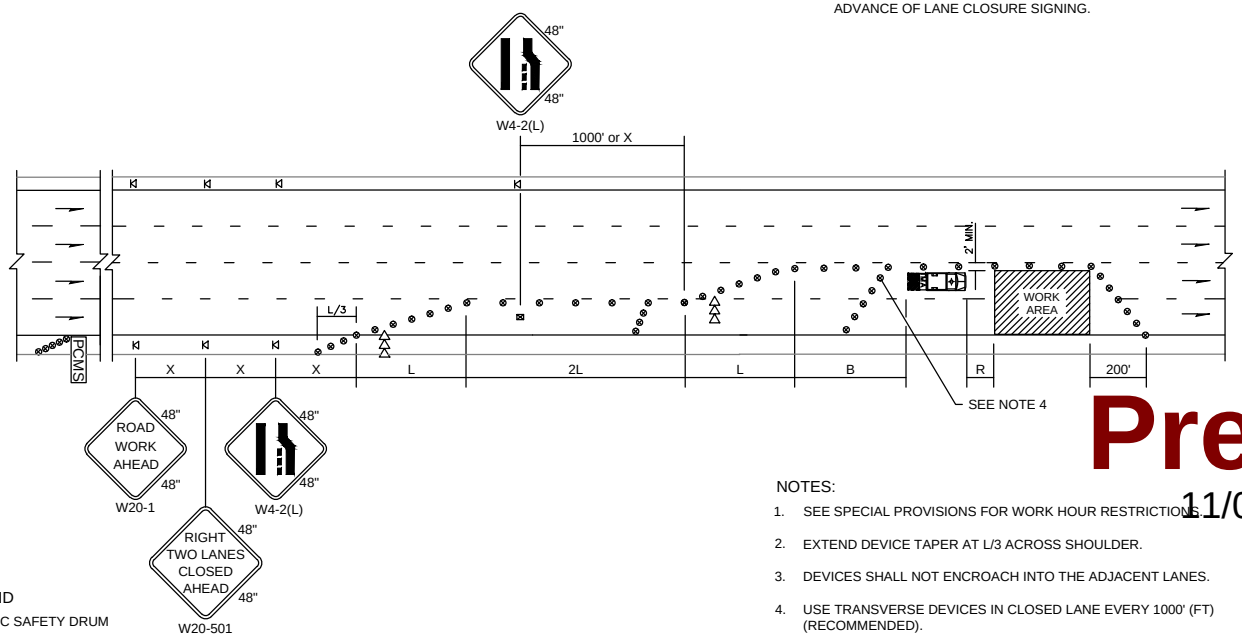

LEGEND

- TRAFFIC SAFETY DRUM
- TEMPORARY SIGN LOCATION
- SEQUENTIAL ARROW SIGN
- TRANSPORTABLE ATTENUATOR
- PCMS — PORTABLE CHANGEABLE MESSAGE SIGN
- TEMPORARY SIGN LOCATION (5' (FT) MOUNTING HEIGHT)

NOTES:

1. SEE SPECIAL PROVISIONS FOR WORK HOUR RESTRICTIONS.
2. EXTEND DEVICE TAPER AT L/3 ACROSS SHOULDER.
3. DEVICES SHALL NOT ENCROACH INTO THE ADJACENT LANES.
4. USE TRANSVERSE DEVICES IN CLOSED LANE EVERY 1000' (FT) (RECOMMENDED).
5. DEVICE SPACING FOR THE DOWNSTREAM TAPER SHALL BE 20' (FT).
6. ALL SIGNS ARE BLACK ON ORANGE.

Preliminary
11/09/2016 1:44:10 PM

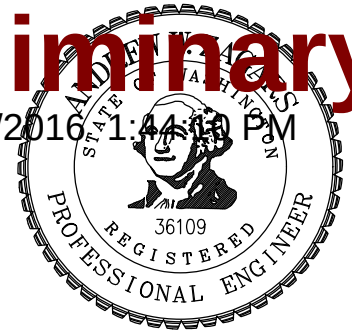

CITY OF SAMMAMISH
DEPARTMENT OF PUBLIC WORKS

DOUBLE-LANE CLOSURE FOR MULTI-LANE ROADWAYS

APPROVED BY
CITY ENGINEER _____ DATE _____

REV	DWN	CKD	DATE	FILE
	XXX	XXX	AUG-XX-2015	FIG09-04

REV. NO. X

SIGN SPACING = X (1)		
RURAL ROADS & URBAN ARTERIALS	35 / 40 MPH	350' ±
RURAL ROADS, URBAN ARTERIALS, RESIDENTIAL & BUSINESS DISTRICTS	25 / 30 MPH	200' ± (2)
URBAN STREETS	25 MPH OR LESS	100' ± (2)

(1) ALL SPACING MAY BE ADJUSTED TO ACCOMMODATE INTERSECTIONS AND DRIVEWAYS.
(2) THIS SPACING MAY BE REDUCED IN URBAN AREAS TO FIT ROADWAY CONDITIONS.

MINIMUM SHOULDER TAPER LENGTH = L/3 (feet)										
SHOULDER WIDTH (feet)	Posted Speed (mph)									
	25	30	35	40	45	50	55	60	65	70
8'	40	40	60	90	-	-	-	-	-	-
10'	40	60	90	90	-	-	-	-	-	-
USE A 3 DEVICES TAPER FOR SHOULDERS LESS THEN 8'										

CHANNELIZATION DEVICE SPACING (feet)		
MPH	TAPER	TANGENT
35/40	30	60
25/30	20	40

BUFFER DATA										
LONGITUDINAL BUFFER SPACE = B										
SPEED (MPH)	25	30	35	40	45	50	55	60	65	70
LENGTH (feet)	155	200	250	305						

BUFFER VEHICLE ROLL AHEAD DISTANCE = R	
TRANSPORTABLE ATTENUATOR MINIMUM HOST VEHICLE WEIGHT 15,000 LBS. THE MAXIMUM WEIGHT SHALL BE IN ACCORDANCE WITH THE MANUFACTURERS RECOMMENDATION.	30 FEET MIN. TO 100 FEET MAX.
PROTECTIVE VEHICLE MAY BE A WORK VEHICLE STRATEGICALLY LOCATED TO SHIELD THE WORK AREA.	NO SPECIFIED DISTANCE REQUIRED

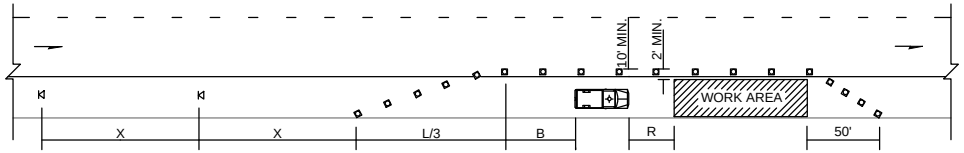

W20-1

W21-5

LEGEND

- TEMPORARY SIGN LOCATION
- CHANNELIZING DEVICES
- PROTECTIVE VEHICLE

NOTES:

1. DEVICE SPACING FOR THE DOWNSTREAM TAPER SHALL BE 20' (FT).
2. ALL SIGNS ARE BLACK ON ORANGE.

Preliminary
11/09/2016 1:44:15 PM

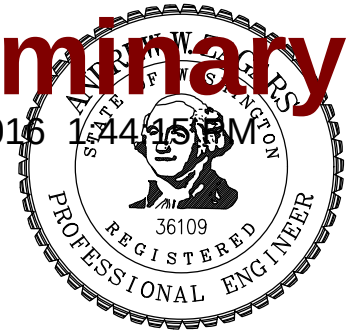

CITY OF SAMMAMISH
DEPARTMENT OF PUBLIC WORKS

SHOULDER CLOSURE – LOW SPEED (40 MPH OR LESS)

APPROVED BY
CITY ENGINEER _____ DATE _____

REV	DWN	CKD	DATE	FILE
	XXX	XXX	AUG-XX-2015	FIG09-05

REV. NO. X

SIGN SPACING = X (1)		
RURAL ROADS	45 / 55 MPH	500' ±
RURAL ROADS & URBAN ARTERIALS	35 / 40 MPH	350' ±
RURAL ROADS & URBAN ARTERIALS RESIDENTAL & BUSINESS DISTREICTS	25 / 30 MPH	200' ± (2)
URBAN STREETS	25 MPH OR LESS	100' ± (2)

(1) ALL SPACING MAY BE ADJUSTED TO ACCOMMODATE INTERCHANGE RAMPS, AT-GRADE INTERSECTIONS AND DRIVEWAYS.
(2) THIS SPACING MAY BE REDUCED IN URBAN AREAS TO FIT ROADWAY CONDITIONS.

MINIMUM TAPER LENGTH = L (feet)										
LANE WIDTH (feet)	Posted Speed (mph)									
	25	30	35	40	45	50	55	60	65	70
10	105	150	205	270	450	500	-	-	-	-
11	115	165	225	295	495	550	-	-	-	-
12	125	180	245	320	540	600	-	-	-	-

CHANNELIZATION DEVICE SPACING (feet)		
MPH	TAPER	TANGENT
50	40	80
35/45	30	60
25/30	20	40

BUFFER DATA										
LONGITUDINAL BUFFER SPACE = B										
SPEED (MPH)	25	30	35	40	45	50	55	60	65	70
LENGTH (feet)	155	200	250	305	360	425	-	-	-	-
BUFFER VEHICLE ROLL AHEAD DISTANCE = R										
TRANSPORTABLE ATTENUATOR MINIMUM HOST VEHICLE WEIGHT 15,000 LBS. THE MAXIMUM WEIGHT SHALL BE IN ACCORDANCE WITH THE MANUFACTURERS RECOMMENDATION.										30 FEET MIN. TO 100 FEET MAX.
PROTECTIVE VEHICLE MAY BE A WORK VEHICLE STRATEGICALLY LOCATED TO SHIELD THE WORK AREA.										NO SPECIFIED DISTANCE REQUIRED

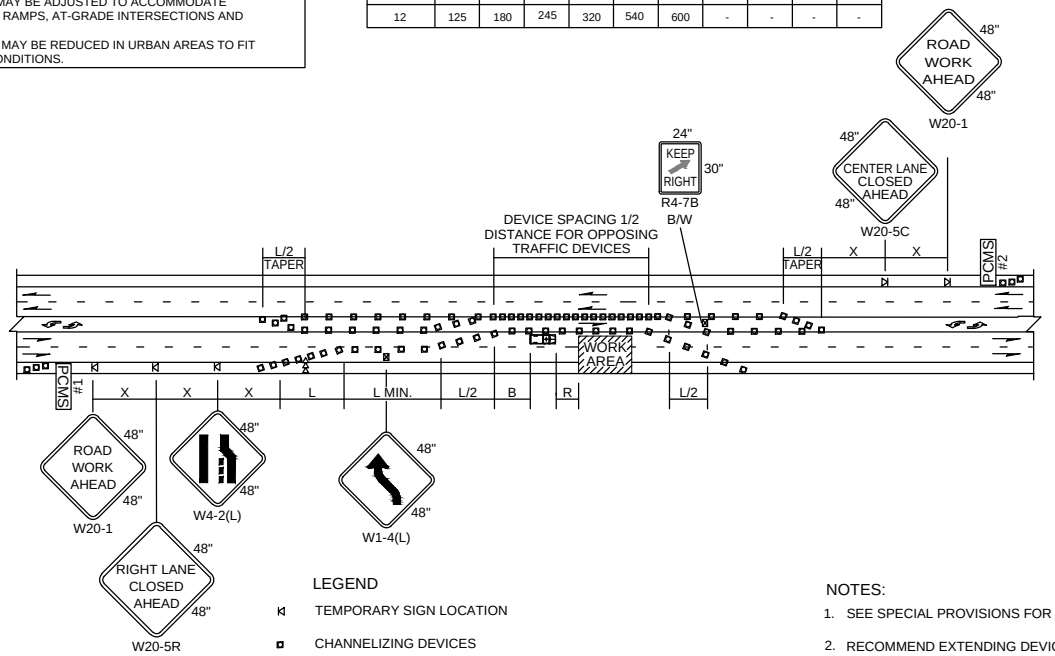

PCMS #1	
1	2
RIGHT LANE CLOSURE	1 MILE AHEAD
2.0 SEC	2.0 SEC

FIELD LOCATE IN ADVANCE OF TEMPORARY SIGNS.

PCMS #2	
1	2
CENTER LANE CLOSED	NNO LEFT TURNING
2.0 SEC	2.0 SEC

FIELD LOCATE IN ADVANCE OF TEMPORARY SIGNS.

LEGEND

- TEMPORARY SIGN LOCATION
- CHANNELIZING DEVICES
- SEQUENTIAL ARROW SIGN
- PROTECTIVE VEHICLE
- PCMS — PORTABLE CHANGEABLE MESSAGE SIGN
- TEMPORARY SIGN LOCATION (5' MOUNTING HEIGHT)

NOTES:

1. SEE SPECIAL PROVISIONS FOR WORK HOUR RESTRICTIONS.
2. RECOMMEND EXTENDING DEVICE TAPER (L/3) ACROSS SHOULDER.
3. FOR POSTED SPEED LIMITS OF 30 MPH OR LESS, USE SIGN W1-3 IN LIEU OF SIGN W1-4.
4. ALL SIGNS ARE BLACK ON ORANGE UNSLESS OTHERWISE DESIGNATED.

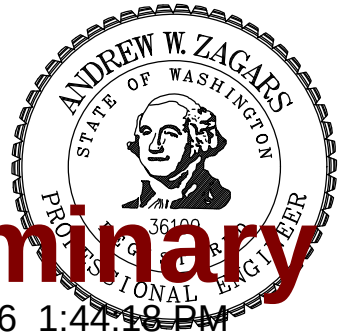

Preliminary

11/09/2016 1:44:18 PM

CITY OF SAMMAMISH
DEPARTMENT OF PUBLIC WORKS

RIGHT LANE CLOSURE WITH SHIFT – 5 LANE ROADWAY

APPROVED BY
CITY ENGINEER _____ DATE _____

REV	DWN	CKD	DATE	FILE
	XXX	XXX	AUG-XX-2015	FIG09-06

REV. NO. X

BUFFER DATA										
LONGITUDINAL BUFFER SPACE = B										
SPEED (MPH)	25	30	35	40	45	50	55	60	65	70
LENGTH (feet)	155	200	250	305	360	425	-	-	-	-

BUFFER VEHICLE ROLL AHEAD DISTANCE = R	
TRANSPORTABLE ATTENUATOR MINIMUM HOST VEHICLE WEIGHT 15,000 LBS. THE MAXIMUM WEIGHT SHALL BE IN ACCORDANCE WITH THE MANUFACTURERS RECOMMENDATION.	30 FEET MIN. TO 100 FEET MAX.
PROTECTIVE VEHICLE MAY BE A WORK VEHICLE STRATEGICALLY LOCATED TO SHIELD THE WORK AREA.	NO SPECIFIED DISTANCE REQUIRED

SIGN SPACING = X (1)		
RURAL ROADS	45 / 55 MPH	500' ±
RURAL ROADS & URBAN ARTERIALS	35 / 40 MPH	350' ±
RURAL ROADS & URBAN ARTERIALS RESIDENTAL & BUSINESS DISTREICTS	25 / 30 MPH	200' ± (2)
URBAN STREETS	25 MPH OR LESS	100' ± (2)

(1) ALL SPACING MAY BE ADJUSTED TO ACCOMMODATE INTERCHANGE RAMPS, AT-GRADE INTERSECTIONS AND DRIVEWAYS.
(2) THIS SPACING MAY BE REDUCED IN URBAN AREAS TO FIT ROADWAY CONDITIONS.

MINIMUM TAPER LENGTH = L (feet)										
LANE WIDTH (feet)	Posted Speed (mph)									
	25	30	35	40	45	50	55	60	65	70
10	105	150	205	270	450	500	-	-	-	-
11	115	165	225	295	495	550	-	-	-	-
12	125	180	245	320	540	600	-	-	-	-

CHANNELIZATION DEVICE SPACING (feet)		
MPH	TAPER	TANGENT
50	40	80
35/45	30	60
25/30	20	40

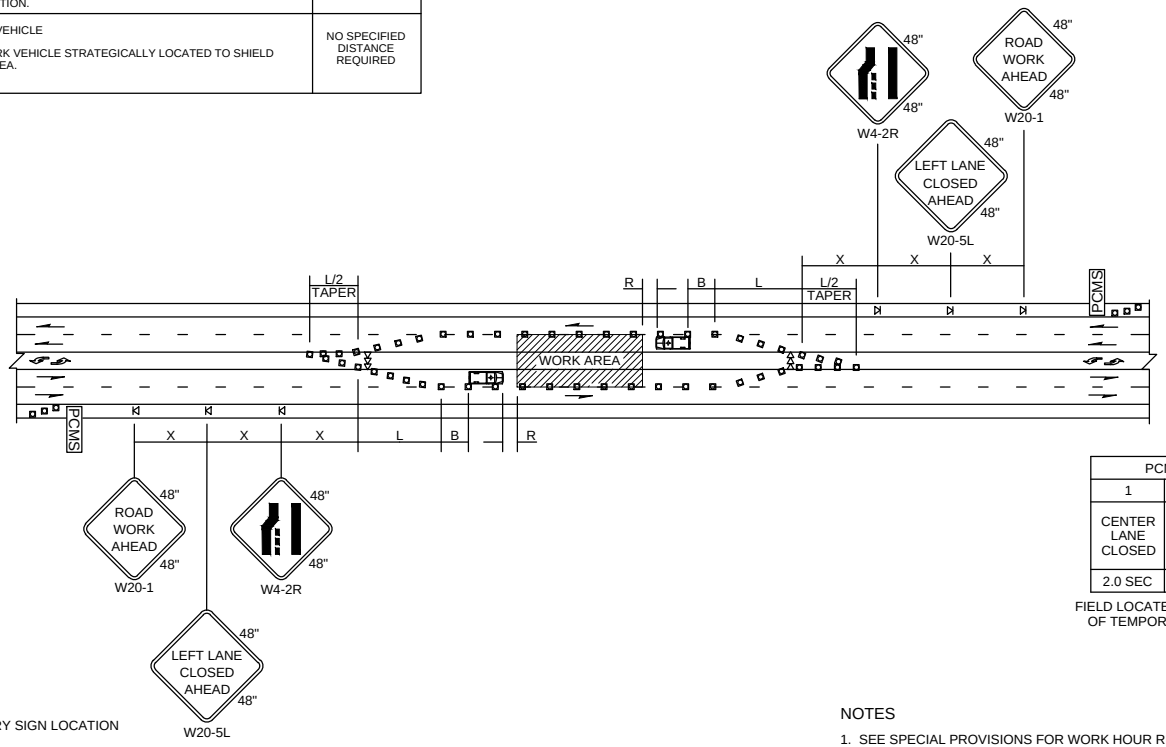

PCMS	
1	2
CENTER LANE CLOSED	NNO LEFT TURNING
2.0 SEC	2.0 SEC

FIELD LOCATE IN ADVANCE OF TEMPORARY SIGNS.

LEGEND

- TEMPORARY SIGN LOCATION
- CHANNELIZING DEVICES
- SEQUENTIAL ARROW SIGN
- PROTECTIVE VEHICLE
- PCMS PORTABLE CHANGEABLE MESSAGE SIGN

NOTES

1. SEE SPECIAL PROVISIONS FOR WORK HOUR RESTRICTIONS.
2. ALL SIGNS ARE BLACK ON ORANGE.

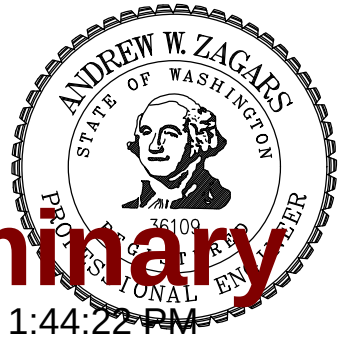

Preliminary

11/09/2016 1:44:22 PM

CITY OF SAMMAMISH
DEPARTMENT OF PUBLIC WORKS

LEFT LANE AND CENTER TURN LANE CLOSURE – 5 LANE ROADWAY

APPROVED BY
CITY ENGINEER _____ DATE _____

REV	DWN	CKD	DATE	FILE
	XXX	XXX	AUG-XX-2015	FIG09-07

REV. NO. X

BUFFER DATA										
LONGITUDINAL BUFFER SPACE = B										
SPEED (MPH)	25	30	35	40	45	50	55	60	65	70
LENGTH (feet)	155	200	250	305	360	425	495	570	645	-

BUFFER VEHICLE ROLL AHEAD DISTANCE = R	
TRANSPORTABLE ATTENUATOR MINIMUM HOST VEHICLE WEIGHT 15,000 LBS. THE MAXIMUM WEIGHT SHALL BE IN ACCORDANCE WITH THE MANUFACTURERS RECOMMENDATION.	30 FEET MIN. TO 100 FEET MAX.
PROTECTIVE VEHICLE MAY BE A WORK VEHICLE STRATEGICALLY LOCATED TO SHIELD THE WORK AREA.	NO SPECIFIED DISTANCE REQUIRED

SIGN SPACING = X (1)		
RURAL HIGHWAYS	60 / 65 MPH	800' ±
RURAL ROADS	45 / 55 MPH	500' ±
RURAL ROADS & URBAN ARTERIALS	35 / 40 MPH	350' ±
RURAL ROADS & URBAN ARTERIALS RESIDENTAL & BUSINESS DISTREICTS	25 / 30 MPH	200' ± (2)
URBAN STREETS	25 MPH OR LESS	100' ± (2)

(1) ALL SPACING MAY BE ADJUSTED TO ACCOMMODATE INTERCHANGE RAMPS, AT-GRADE INTERSECTIONS AND DRIVEWAYS.
(2) THIS SPACING MAY BE REDUCED IN URBAN AREAS TO FIT ROADWAY CONDITIONS.

MINIMUM TAPER LENGTH = L (feet)										
LANE WIDTH (feet)	Posted Speed (mph)									
	25	30	35	40	45	50	55	60	65	70
10	105	150	205	270	450	500	550	-	-	-
11	115	165	225	295	495	550	605	660	-	-
12	125	180	245	320	540	600	660	720	780	-

CHANNELIZATION DEVICE SPACING (feet)		
MPH	TAPER	TANGENT
50/60	40	80
35/45	30	60
25/30	20	40

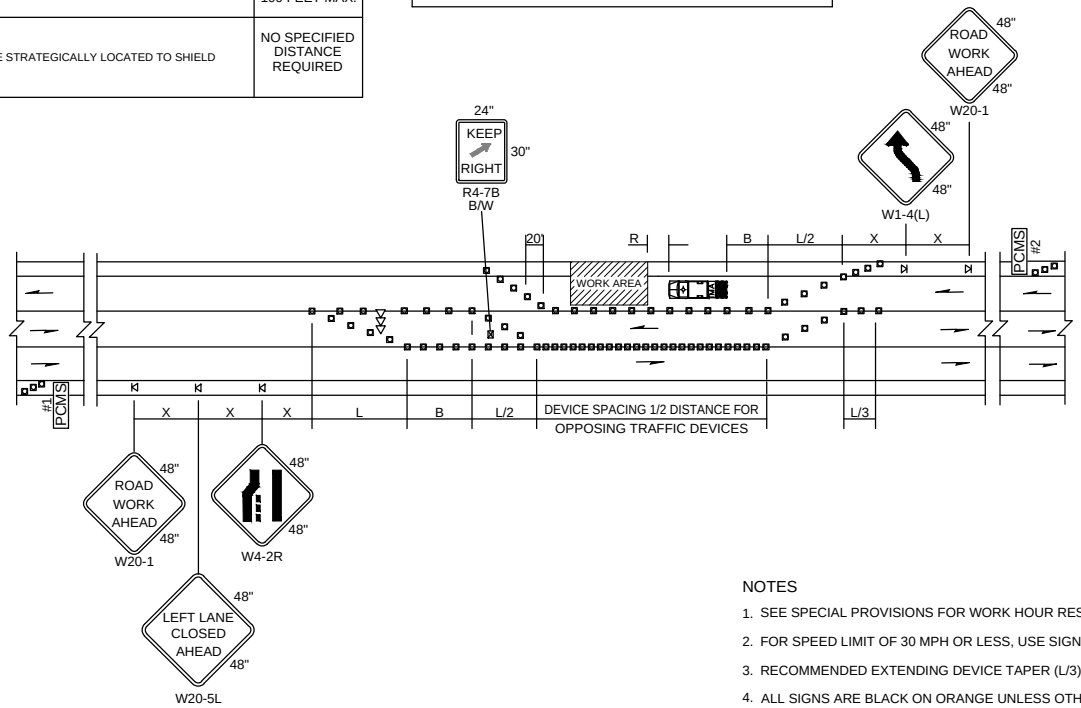

PCMS #1	
1	2
LEFT LANE CLOSURE	1 MILE AHEAD
2.0 SEC	2.0 SEC

FIELD LOCATE IN ADVANCE OF TEMPORARY SIGNS.

PCMS #2	
1	2
LANE SHIFTS LEFT	1 MILE AHEAD
2.0 SEC	2.0 SEC

FIELD LOCATE IN ADVANCE OF TEMPORARY SIGNS.

NOTES

1. SEE SPECIAL PROVISIONS FOR WORK HOUR RESTRICTIONS.
2. FOR SPEED LIMIT OF 30 MPH OR LESS, USE SIGN W1-3 IN LIEU OF SIGN W1-4.
3. RECOMMENDED EXTENDING DEVICE TAPER (L/3) ACROSS SHOULDER.
4. ALL SIGNS ARE BLACK ON ORANGE UNLESS OTHERWISE DESIGNATED.

LEGEND

- TEMPORARY SIGN LOCATION
- CHANNELIZING DEVICES
- SEQUENTIAL ARROW SIGN
- TRANSPORTABLE ATTENUATOR
- PCMS — PORTABLE CHANGEABLE MESSAGE SIGN
- TEMPORARY SIGN LOCATION (5' MOUNTING HEIGHT)

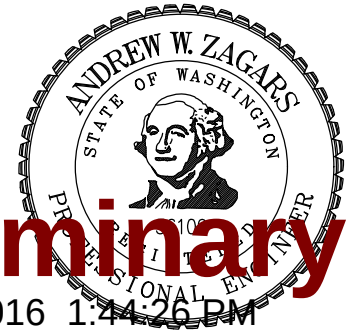

Preliminary

11/09/2016 1:44:26 PM

CITY OF SAMMAMISH
DEPARTMENT OF PUBLIC WORKS

LANE SHIFT – THREE LANE ROADWAY

APPROVED BY
CITY ENGINEER _____ DATE _____

REV	DWN	CKD	DATE	FILE
	XXX	XXX	AUG-XX-2015	FIG09-08

REV. NO. X

SIGN SPACING = X (1)		
FREEWAYS & EXPRESSWAYS	55 / 70 MPH	1500' ±
RURAL HIGHWAYS	60 / 65 MPH	800' ±
RURAL ROADS	45 / 55 MPH	500' ±
RURAL ROADS & URBAN ARTERIALS	35 / 40 MPH	350' ±
RURAL ROADS & URBAN ARTERIALS RESIDENTAL & BUSINESS DISTREICTS	25 / 30 MPH	200' ± (2)
URBAN STREETS	25 MPH OR LESS	100' ± (2)

(1) ALL SPACING MAY BE ADJUSTED TO ACCOMMODATE INTERCHANGE RAMPS, AT-GRADE INTERSECTIONS AND DRIVEWAYS.
(2) THIS SPACING MAY BE REDUCED IN URBAN AREAS TO FIT ROADWAY CONDITIONS.

MINIMUM SHOULDER TAPER LENGTH = L/3 (feet)										
SHOULDER WIDTH (feet)	Posted Speed (mph)									
	25	30	35	40	45	50	55	60	65	70
8'	40	40	60	90	120	130	150	160	170	190
10'	40	60	90	90	150	170	190	200	220	240
USE A MINIMUM 3 DEVICES TAPER FOR SHOULDER LESS THEN 8'.										

CHANNELIZATION DEVICE SPACING (feet)		
MPH	TAPER	TANGENT
50/70	40	80
35/45	30	60
25/30	20	40

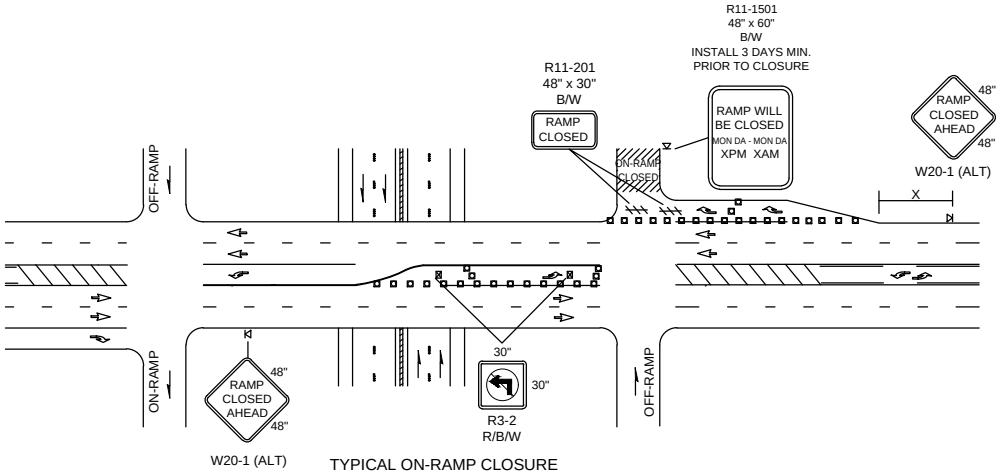

TYPICAL ON-RAMP CLOSURE

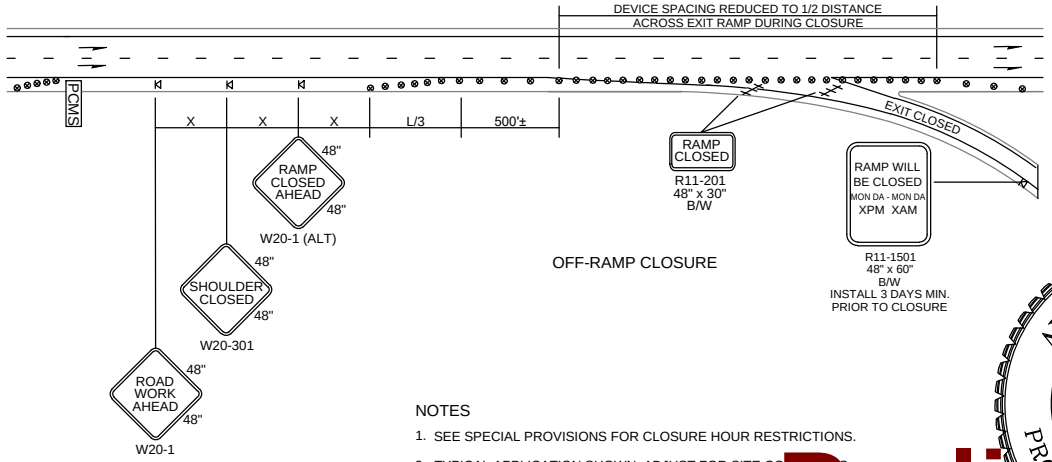

OFF-RAMP CLOSURE

PCMS	
1	2
EXIT XXX CLOSED	USE EXIT XXX
2.0 SEC	2.0 SEC

FIELD LOCATE

LEGEND

- TYPE 3 BARRICADE
- TEMPORARY SIGN LOCATION
- CHANNELIZING DEVICES
- TRAFFIC SAFETY DRUM
- PCMS — PORTABLE CHANGEABLE MESSAGE SIGN
- TEMPORARY SIGN LOCATION (5' MOUNTING HEIGHT)

NOTES

1. SEE SPECIAL PROVISIONS FOR CLOSURE HOUR RESTRICTIONS.
2. TYPICAL APPLICATION SHOWN. ADJUST FOR SITE CONDITIONS.
3. ALL SIGNS ARE BLACK ON ORANGE UNLESS OTHERWISE DESIGNATED.

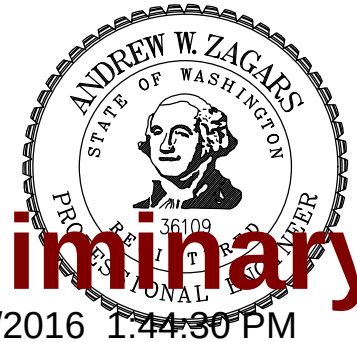

Preliminary

11/09/2016 1:44:30 PM

CITY OF SAMMAMISH
DEPARTMENT OF PUBLIC WORKS

SHORT TERM RAMP CLOSURES

APPROVED BY
CITY ENGINEER _____ DATE _____

REV	DWN	CKD	DATE	FILE
	XXX	XXX	AUG-XX-2015	FIG09-09

REV. NO. X

BUFFER DATA										
LONGITUDINAL BUFFER SPACE = B										
SPEED (MPH)	25	30	35	40	45	50	55	60	65	70
LENGTH (feet)	155	200	250	305	360	425	495	570	645	-

BUFFER VEHICLE ROLL AHEAD DISTANCE = R	
TRANSPORTABLE ATTENUATOR MINIMUM HOST VEHICLE WEIGHT 15,000 LBS. THE MAXIMUM WEIGHT SHALL BE IN ACCORDANCE WITH THE MANUFACTURERS RECOMMENDATION.	30 FEET MIN. TO 100 FEET MAX.
PROTECTIVE VEHICLE MAY BE A WORK VEHICLE STRATEGICALLY LOCATED TO SHIELD THE WORK AREA.	NO SPECIFIED DISTANCE REQUIRED

MINIMUM TAPER LENGTH = L (feet)										
LANE WIDTH (feet)	Posted Speed (mph)									
	25	30	35	40	45	50	55	60	65	70
10	105	150	205	270	450	500	550	-	-	-
11	115	165	225	295	495	550	605	660	-	-
12	125	180	245	320	540	600	660	720	-	-

SIGN SPACING = X (1)		
RURAL HIGHWAYS	60 / 65 MPH	800' ±
RURAL ROADS	45 / 55 MPH	500' ±
RURAL ROADS & URBAN ARTERIALS	35 / 40 MPH	350' ±
RURAL ROADS & URBAN ARTERIALS RESIDENTAL & BUSINESS DISTRICTS	25 / 30 MPH	200' ± (2)
URBAN STREETS	25 MPH OR LESS	100' ± (2)

(1) ALL SPACING MAY BE ADJUSTED TO ACCOMMODATE INTERCHANGE RAMPS, AT-GRADE INTERSECTIONS AND DRIVEWAYS.
(2) THIS SPACING MAY BE REDUCED IN URBAN AREAS TO FIT ROADWAY CONDITIONS.

CHANNELIZATION DEVICE SPACING (feet)		
MPH	TAPER	TANGENT
50/70	40	80
35/45	30	60
25/30	20	40

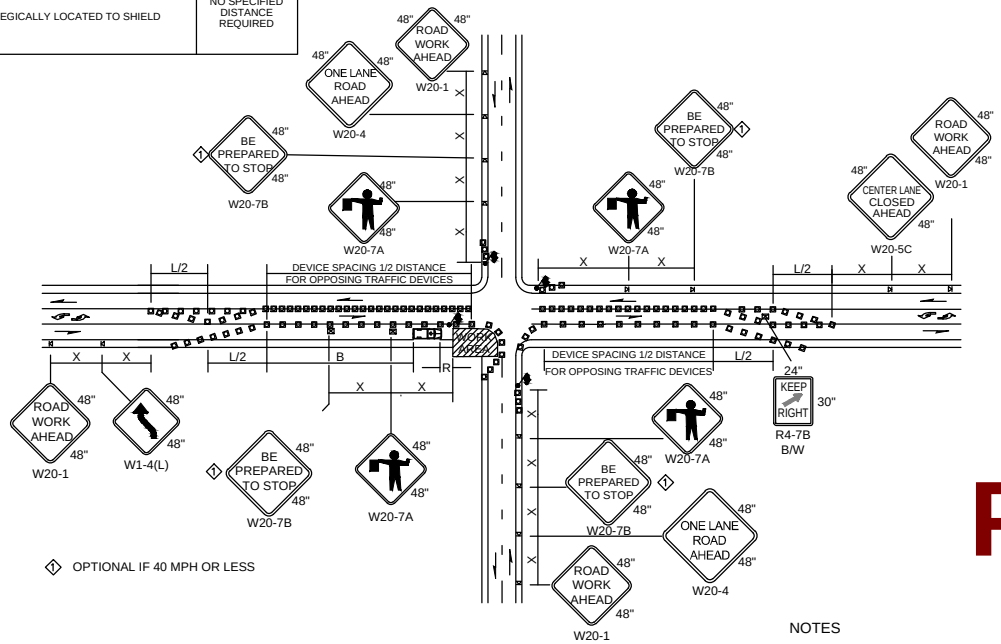

LEGEND

- FLAGGING STATION
- TEMPORARY SIGN LOCATION
- CHANNELIZING DEVICES
- PROTECTIVE VEHICLE - RECOMMENDED
- TEMPORARY SIGN LOCATION (5' MOUNTING HEIGHT)

NOTES

1. RECOMMEND EXTENDING DEVICE TAPER (L/3) ACROSS SHOULDER.
2. IF A SIGNAL IS PRESENT, IT SHALL BE SET TO "RED FLASH MODE" OR TURNED OFF DURING FLAGGING OPERATIONS.
3. FOR SPEED LIMIT OF 30 MPH OR LESS USE SIGN W1-3 IN LIEU OF SIGN W1-4.
4. MAINTAIN A MINIMUM OF ONE ACCESS POINT FOR EACH BUSINESS WITHIN WORK AREA LIMITS.
5. ALL SIGNS ARE BLACK ON ORANGE UNLESS OTHERWISE DESIGNATED.

Preliminary

11/09/2016 11:44:35 PM

CITY OF SAMMAMISH
DEPARTMENT OF PUBLIC WORKS

INTERSECTION LANE CLOSURE – THREE LANE ROADWAY

APPROVED BY
CITY ENGINEER _____ DATE _____

REV	DWN	CKD	DATE	FILE
	XXX	XXX	AUG-XX-2015	FIG09-10

REV. NO. X

CHANNELIZATION DEVICE SPACING (feet)		
MPH	TAPER	TANGENT
50/70	40	80
35/45	30	60
25/30	20	40

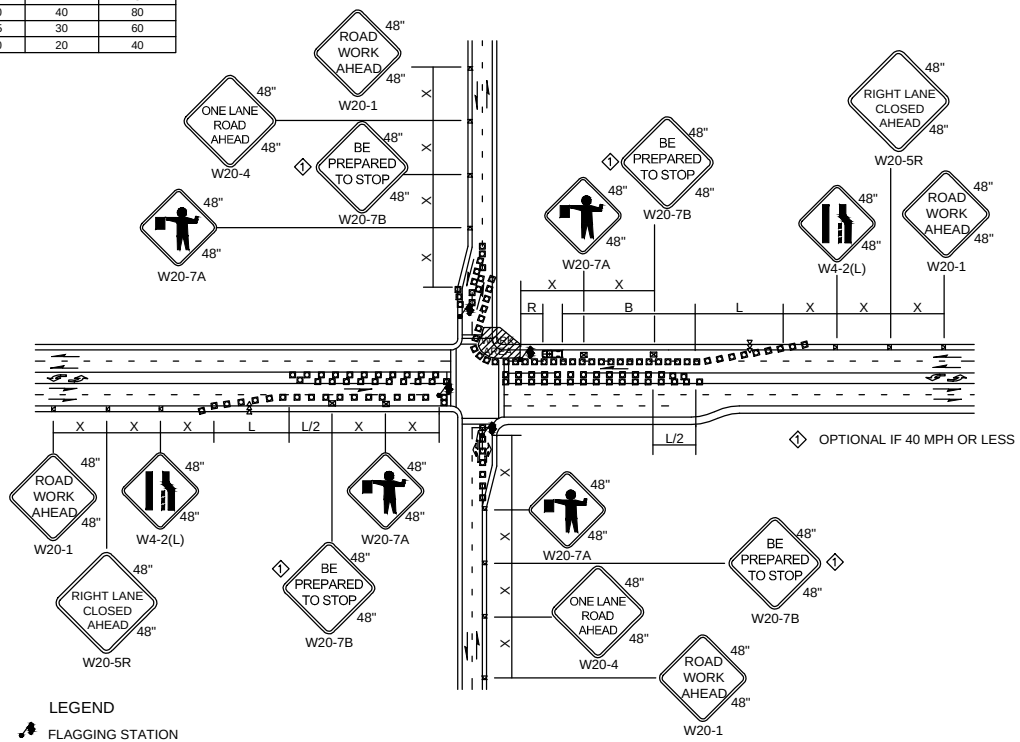

BUFFER DATA										
LONGITUDINAL BUFFER SPACE = B										
SPEED (MPH)	25	30	35	40	45	50	55	60	65	70
LENGTH (feet)	155	200	250	305	360	425	495	570	645	-

BUFFER VEHICLE ROLL AHEAD DISTANCE = R	
TRANSPORTABLE ATTENUATOR MINIMUM HOST VEHICLE WEIGHT 15,000 LBS. THE MAXIMUM WEIGHT SHALL BE IN ACCORDANCE WITH THE MANUFACTURERS RECOMMENDATION.	30 FEET MIN. TO 100 FEET MAX.
PROTECTIVE VEHICLE MAY BE A WORK VEHICLE STRATEGICALLY LOCATED TO SHIELD THE WORK AREA.	NO SPECIFIED DISTANCE REQUIRED

MINIMUM TAPER LENGTH = L (feet)										
LANE WIDTH (feet)	Posted Speed (mph)									
	25	30	35	40	45	50	55	60	65	70
10	105	150	205	270	450	500	550	-	-	-
11	115	165	225	295	495	550	605	660	-	-
12	125	180	245	320	540	600	660	720	-	-

SIGN SPACING = X (1)		
RURAL HIGHWAYS	60 / 65 MPH	800' ±
RURAL ROADS	45 / 55 MPH	500' ±
RURAL ROADS & URBAN ARTERIALS	35 / 40 MPH	350' ±
RURAL ROADS & URBAN ARTERIALS RESIDENTAL & BUSINESS DISTREICTS	25 / 30 MPH	200' ± (2)
URBAN STREETS	25 MPH OR LESS	100' ± (2)

(1) ALL SPACING MAY BE ADJUSTED TO ACCOMMODATE INTERCHANGE RAMPS, AT-GRADE INTERSECTIONS AND DRIVEWAYS.
(2) THIS SPACING MAY BE REDUCED IN URBAN AREAS TO FIT ROADWAY CONDITIONS.

LEGEND

- FLAGGING STATION
- TEMPORARY SIGN LOCATION
- CHANNELIZING DEVICES
- SEQUENTIAL ARROW SIGN
- PROTECTIVE VEHICLE - RECOMMENDED
- TEMPORARY SIGN LOCATION (5' MOUNTING HEIGHT)

NOTES

1. RECOMMEND EXTENDING DEVICE TAPER (L/3) ACROSS SHOULDER.
2. IF A SIGNAL IS PRESENT, IT SHALL BE SET TO "RED FLASH MODE" OR TURNED OFF DURING FLAGGING OPERATIONS.
3. MAINTAIN A MINIMUM OF ONE ACCESS POINT FOR EACH BUSINESS WITHIN WORK AREA LIMITS.
4. ALL SIGNS ARE BLACK ON ORANGE.

Preliminary

11/09/2015 1:44:40 PM

ANDREW W. ZAGERS
STATE OF WASHINGTON
36109
REGISTERED
PROFESSIONAL ENGINEER

CITY OF SAMMAMISH
DEPARTMENT OF PUBLIC WORKS

INTERSECTION LANE CLOSURE – FIVE LANE ROADWAY

APPROVED BY
CITY ENGINEER _____ DATE _____

REV	DWN	CKD	DATE	FILE
	XXX	XXX	AUG-XX-2015	FIG09-11

REV. NO. X

NO PARKING

R8-3 R/W INSTALL ON TYPE 2 BARRICADES THROUGHOUT THE WORK AREA 24 HOURS PRIOR TO IMPLEMENTING TRAFFIC CONTROL. PRIOR NOTIFICATION OF LOCAL LAW ENFORCEMENT REQUIRED.

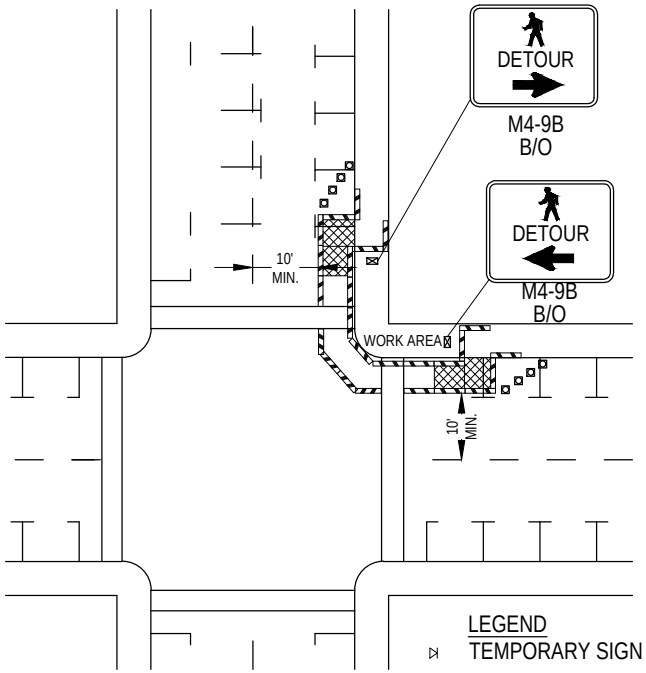

SIDEWALK DIVERSION

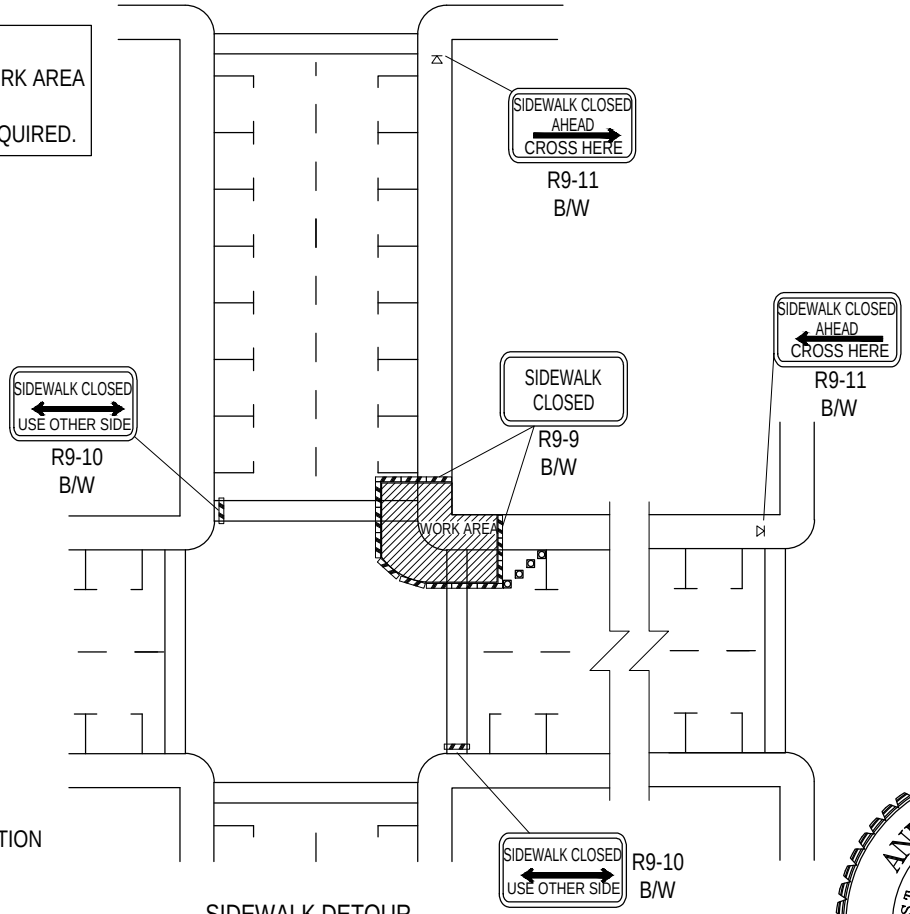

SIDEWALK DETOUR

LEGEND

- TEMPORARY SIGN LOCATION
- CHANNELIZING DEVICES
- PEDESTRIAN CHANNELIZING DEVICES
- TEMPORARY PEDESTRIAN RAMP FOR SIDEWALKS

Preliminary

11/09/2016 1:44:43 PM

NOTES:

1. CONTROLS SHOWN ARE FOR PEDESTRIAN TRAFFIC ONLY.
2. A 60" PEDESTRIAN PATH WIDTH SHOULD BE MAINTAINED (48" IS THE MINIMUM).
3. CONTACT AND COORDINATE IMPACTED TRANSIT AGENCIES PRIOR TO IMPLEMENTING ANY CLOSURES.
4. SEE STD DWG 9-13 FOR TEMPORARY PEDESTRIAN RAMP DETAILS.
5. ADA PEDESTRIAN FACILITIES MUST BE MAINTAINED, SEE WSDOT STD SPECIFICATION 1-10.2(1)B.
6. TEMPORARY PEDESTRIAN PUSH BUTTONS SHALL BE PLACED ON THE DIVERTED PATH WHEN EXISTING BUTTONS ARE NOT ACCESSIBLE TO PEDESTRIANS.

CITY OF SAMMAMISH
DEPARTMENT OF PUBLIC WORKS

INTERSECTION PEDESTRIAN TRAFFIC CONTROL

APPROVED BY
CITY ENGINEER _____ DATE _____

REV	DWN	CKD	DATE	FILE
	XXX	XXX	AUG-XX-2015	FIG09-12

REV. NO. X

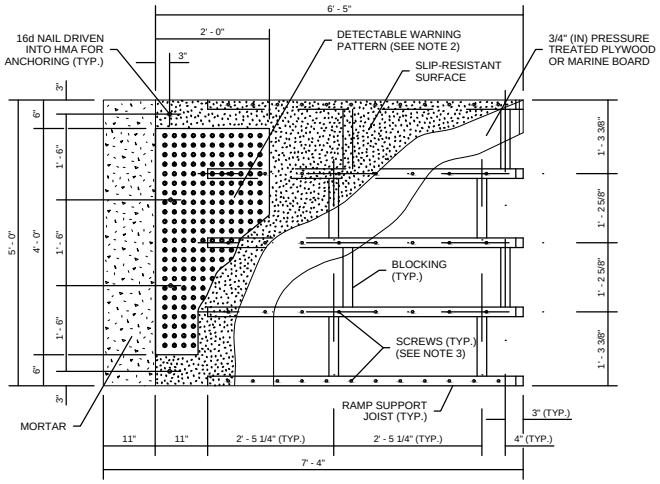

TOP VIEW

RAMP DETAIL

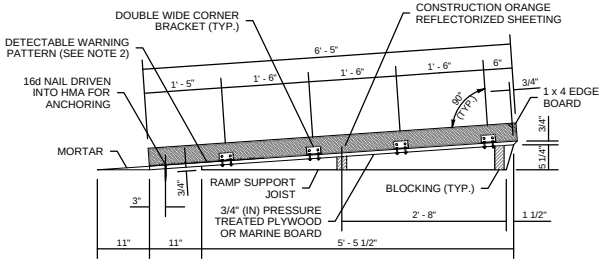

SIDE VIEW

RAMP AND EDGE BOARD

NOTES

1. THIS DESIGN ASSUMES OPTIMAL CONDITIONS AND A STANDARD CURB HEIGHT OF 6" (IN). INSTALLED RAMPS SHALL BE NO STEEPER THAN 12H : 1V, AND SHALL HAVE A CROSS-SLOPE OF 2% OR LESS. USE SHIMS OR GROUT AS REQUIRED TO ADJUST FOR EXISTING CONDITIONS AND TO PREVENT ROCKING. SHIMS SHALL BE NO HIGHER THAN 1" (IN), AND SHALL BE SECURED TO THE RAMP. FOR CURBS SHORTER THAN 6" (IN), INSTALL A RAMP ON THE SIDEWALK, NO STEEPER THAN 12H : 1V, MADE OF GROUT OR AS APPROVED BY THE ENGINEER. ADJUSTMENTS TO THE RAMP DIMENSIONS SHOWN MAY BE REQUIRED TO MATCH EXISTING CONDITIONS.
2. THE DETECTABLE WARNING PATTERN SHALL BE INSTALLED ONLY WHEN THE INTENT IS TO GUIDE PEDESTRIANS DIRECTLY ACROSS THE ROADWAY (CROSSWALK). SEE WSDOT STD PLAN F-40.10 FOR DETAILS.
3. SCREWS SHALL BE USED TO SECURE THE RAMP SURFACE. SPACING SHALL BE IN ACCORDANCE WITH THE CURRENT BUILDING CODE.
4. USE A SLIP-RESISTANT TREATMENT FOR THE SURFACE OF RAMP.
5. ALL FASTENERS SHALL BE GALVANIZED.
6. DO NOT INSTALL A HAND RAILING IF USING THE EDGE BOARD OPTION.
7. RAMP AND RAMP LANDING SHALL NOT EXTEND INTO AN OPEN BIKE LANE OR TRAVEL LANE.

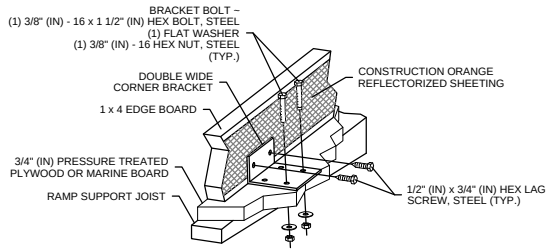

PERSPECTIVE VIEW

DETAIL (A)

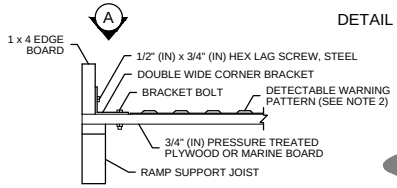

END VIEW

EDGE BOARD ATTACHMENT DETAIL

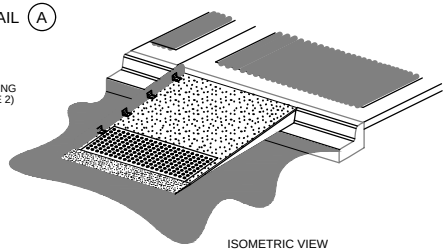

ISOMETRIC VIEW

Preliminary

11/09/2016 1:44:47 PM

CITY OF SAMMAMISH
DEPARTMENT OF PUBLIC WORKS

TEMPORARY PEDESTRIAN RAMP

APPROVED BY
CITY ENGINEER _____ DATE _____

REV	DWN	CKD	DATE	FILE
	XXX	XXX	AUG-XX-2015	FIG09-13

REV. NO. X

BUFFER DATA										
LONGITUDINAL BUFFER SPACE = B										
SPEED (MPH)	25	30	35	40	45	50	55	60	65	70
LENGTH (feet)	155	200	250	305	360	425	495	570	645	730
BUFFER VEHICLE ROLL AHEAD DISTANCE = R										
TRANSPORTABLE ATTENUATOR MINIMUM HOST VEHICLE WEIGHT 15,000 LBS. THE MAXIMUM WEIGHT SHALL BE IN ACCORDANCE WITH THE MANUFACTURERS RECOMMENDATION.									30 FEET MIN. TO 100 FEET MAX.	

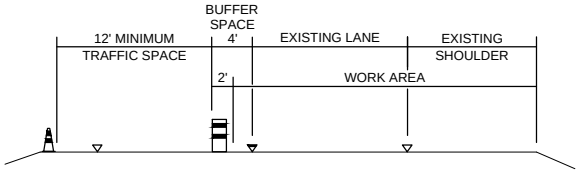

TYPICAL SECTION A-A

SIGN SPACING = X (1)		
FREEWAYS & EXPRESSWAYS	55 / 70 MPH	1500' ±
RURAL HIGHWAYS	60 / 65 MPH	800' ±
RURAL ROADS	45 / 55 MPH	500' ±
RURAL ROADS & URBAN ARTERIALS	35 / 40 MPH	350' ±
RURAL ROADS & URBAN ARTERIALS RESIDENTAL & BUSINESS DISTRICTS	25 / 30 MPH	200' ± (2)
URBAN STREETS	25 MPH OR LESS	100' ± (2)

(1) ALL SPACING MAY BE ADJUSTED TO ACCOMMODATE INTERCHANGE RAMPS, AT-GRADE INTERSECTIONS AND DRIVEWAYS.
(2) THIS SPACING MAY BE REDUCED IN URBAN AREAS TO FIT ROADWAY CONDITIONS.

MINIMUM LANE CLOSURE TAPER LENGTH = L (feet)										
LANE WIDTH (feet)	Posted Speed (mph)									
	25	30	35	40	45	50	55	60	65	70
10	105	150	205	270	450	500	550	-	-	-
11	115	165	225	295	495	550	605	660	-	-
12	125	180	245	320	540	600	660	720	780	840

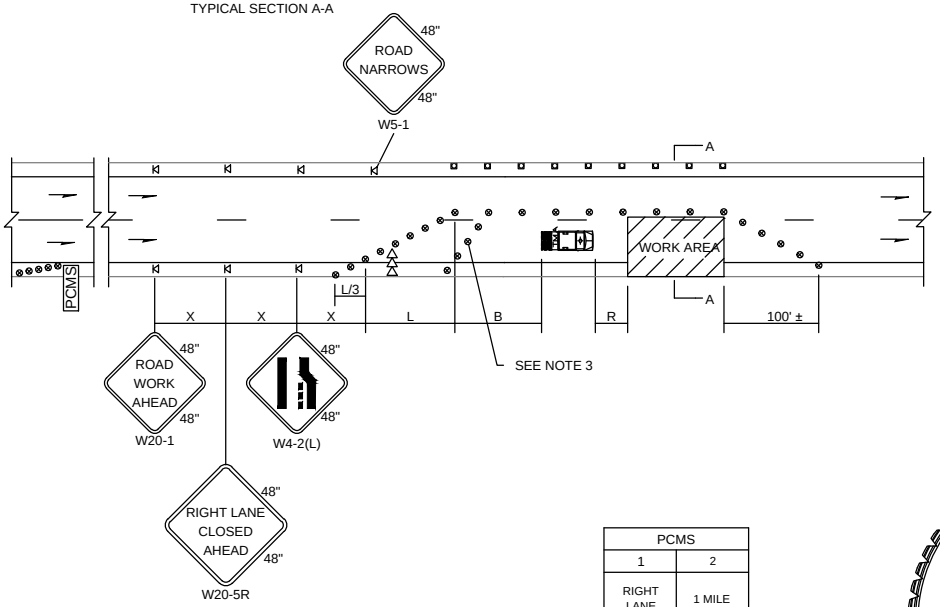

MINIMUM SHOULDER TAPER LENGTH = L/3 (feet)										
SHOULDER WIDTH (feet)	Posted Speed (mph)									
	25	30	35	40	45	50	55	60	65	70
8'	40	40	60	90	120	130	150	160	170	190
10'	40	60	90	90	150	170	190	200	220	240
USE A MINIMUM 3 DEVICES TAPER FOR SHOULDER LESS THEN 8'.										

CHANNELIZATION DEVICE SPACING (feet)		
MPH	TAPER	TANGENT
50/70	40	80
35/45	30	60
25/30	20	40

PCMS	
1	2
RIGHT LANE CLOSURE	1 MILE AHEAD
2.0 SEC	2.0 SEC

FIELD LOCATE 1 MILE ± IN ADVANCE OF LANE CLOSURE SIGNING.

LEGEND

- TEMPORARY SIGN LOCATION
- CHANNELIZING DEVICES
- TRAFFIC SAFETY DRUM
- SEQUENTIAL ARROW SIGN
- TRANSPORTABLE ATTENUATOR
- PCMS — PORTABLE CHANGEABLE MESSAGE SIGN

NOTES

1. SEE SPECIAL PROVISIONS FOR WORK HOUR RESTRICTIONS.
2. RECOMMEND EXTENDING DEVICE TAPER (L/3) ACROSS SHOULDER.
3. USE TRANSVERSE DEVICES IN CLOSED LANE EVERY 1000' (RECOMMENDED).
4. ALL SIGNS ARE BLACK ON ORANGE.
5. RECOMMEND ADVANCE NOTICE FOR ANY OVER WIDTH LOADS PRIOR TO LANE CLOSURE FOR ALTERNATE ROUTES IF APPLICABLE.

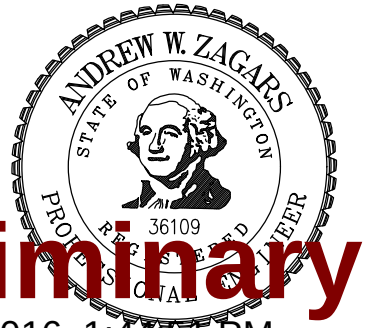

Preliminary

11/09/2016 1:44:51 PM

CITY OF SAMMAMISH
DEPARTMENT OF PUBLIC WORKS

SINGLE-LANE CLOSURE WITH SHIFT

APPROVED BY
CITY ENGINEER _____ DATE _____

REV	DWN	CKD	DATE	FILE
	XXX	XXX	AUG-XX-2015	FIG09-14

REV. NO. X

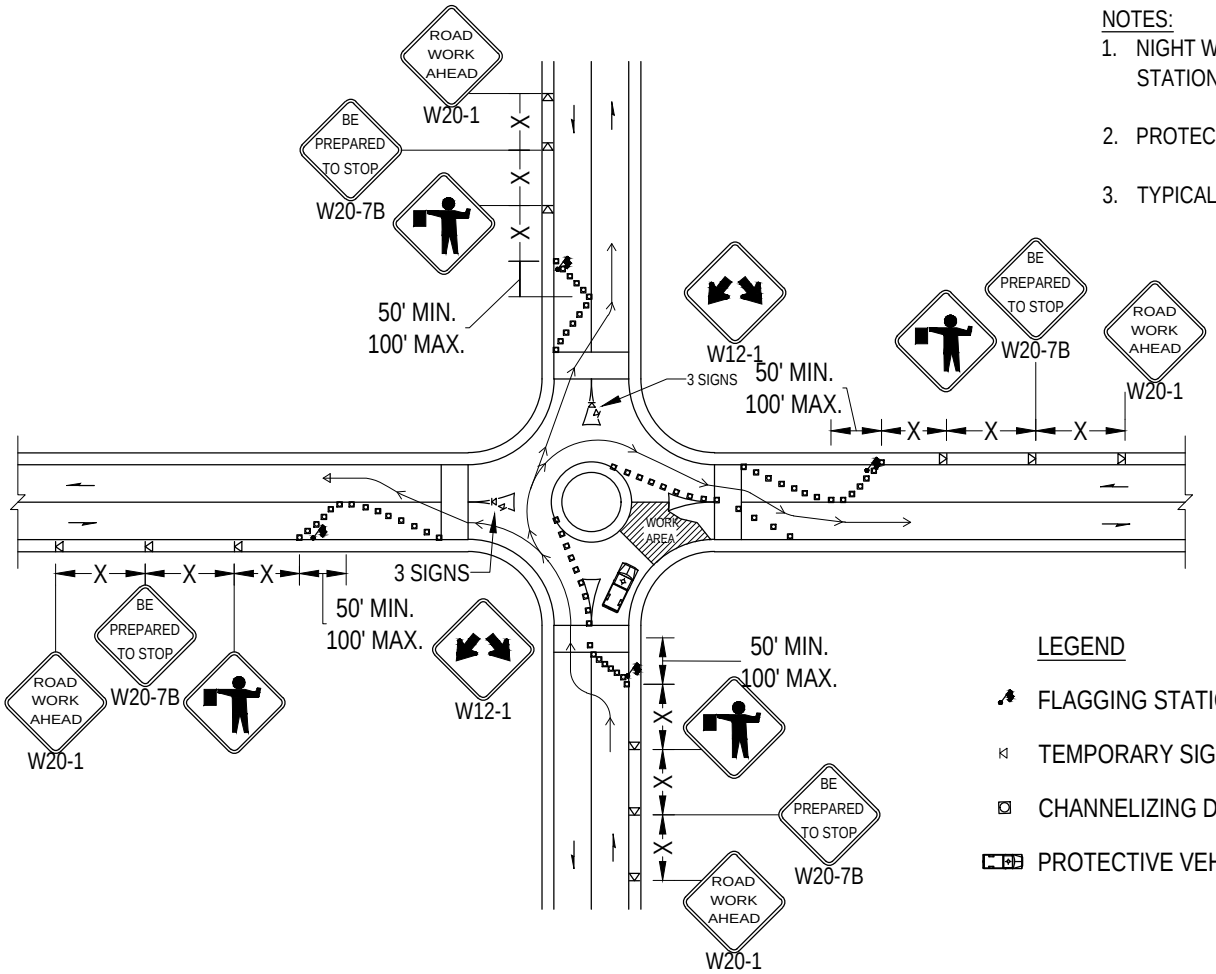

NOTES:

1. NIGHT WORK REQUIRES ADDITIONAL ROADWAY LIGHTING AT FLAGGING STATIONS, SEE THE WSDOT STD SPECIFICATIONS FOR ADDITIONAL DETAILS.
2. PROTECTIVE VEHICLE RECOMMENDED - MAY BE A WORK VEHICLE.
3. TYPICAL APPLICATION SHOWN, ADJUST FOR SITE CONDITIONS.

CHANNELIZATION DEVICE SPACING (feet)		
MPH	TAPER	TANGENT
35/ 45	30	60
25/ 30	20	40

LEGEND

- FLAGGING STATION
- TEMPORARY SIGN LOCATION
- CHANNELIZING DEVICES
- PROTECTIVE VEHICLE - RECOMMENDED

SIGN SPACING = X (1)		
RURAL ROADS & URBAN ARTERIALS	35/ 40 MPH	350'±
RURAL ROADS, URBAN ARTERIALS, RESIDENTIAL & BUSINESS DISTRICTS	25/ 30 MPH	200'± (2)
URBAN STREETS	25 MPH OR LESS	100'± (2)
(1) ALL SPACING MAY BE ADJUSTED TO ACCOMMODATE INTERSECTIONS AND DRIVEWAYS. (2) THIS SPACING MAY BE REDUCED IN URBAN AREAS TO FIT ROADWAY CONDITIONS.		

Preliminary

11/09/2016 1:44:55 PM

CITY OF SAMMAMISH
DEPARTMENT OF PUBLIC WORKS

TYPICAL ROUNDABOUT
FLAGGING OPERATION

APPROVED BY
CITY ENGINEER _____ DATE _____

REV	DWN	CKD	DATE	FILE
	XXX	XXX	AUG-XX-2015	FIG09-15

REV. NO. X

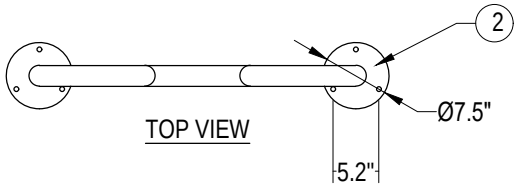

TOP VIEW

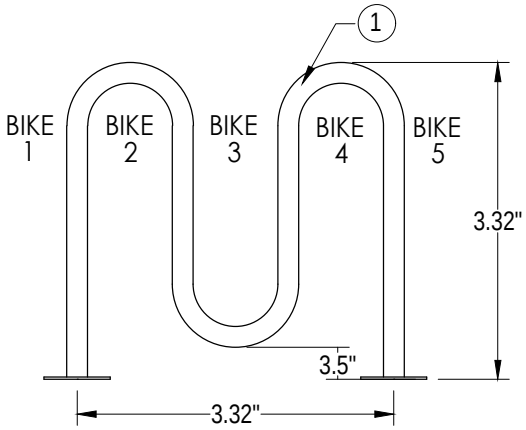

FRONT VIEW

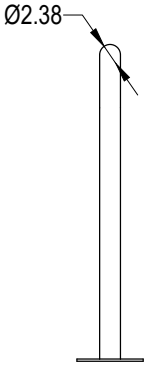

RIGHT SIDE VIEW

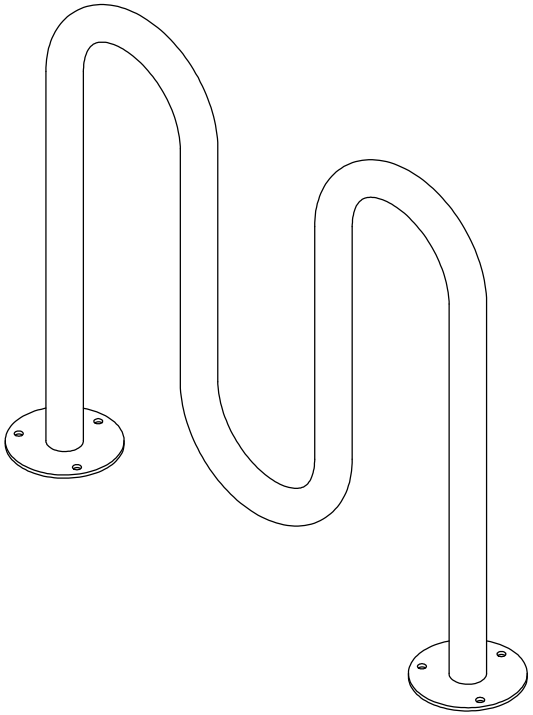

MATERIALS LIST:

1. TUBING - Ø 2 3/8" x 0.154" WALL STEEL TUBING
2. SURFACE PLAT - Ø 7 1/2" x 1/4" THICK STEEL PLATE WITH THREE Ø 9/16" MOUNTING HOLES
3. MOUNTED WITH SIX Ø 1/2" x 4-5" STAINLESS STEEL ANCHOR BOLTS

Preliminary

11/09/2016 1:44:59 PM

CITY OF SAMMAMISH
DEPARTMENT OF PUBLIC WORKS

BIKE RACK

APPROVED BY
CITY ENGINEER _____ DATE _____

REV	DWN	CKD	DATE	FILE
	XXX	XXX	AUG-XX-2015	FIG09-16

REV. NO. X

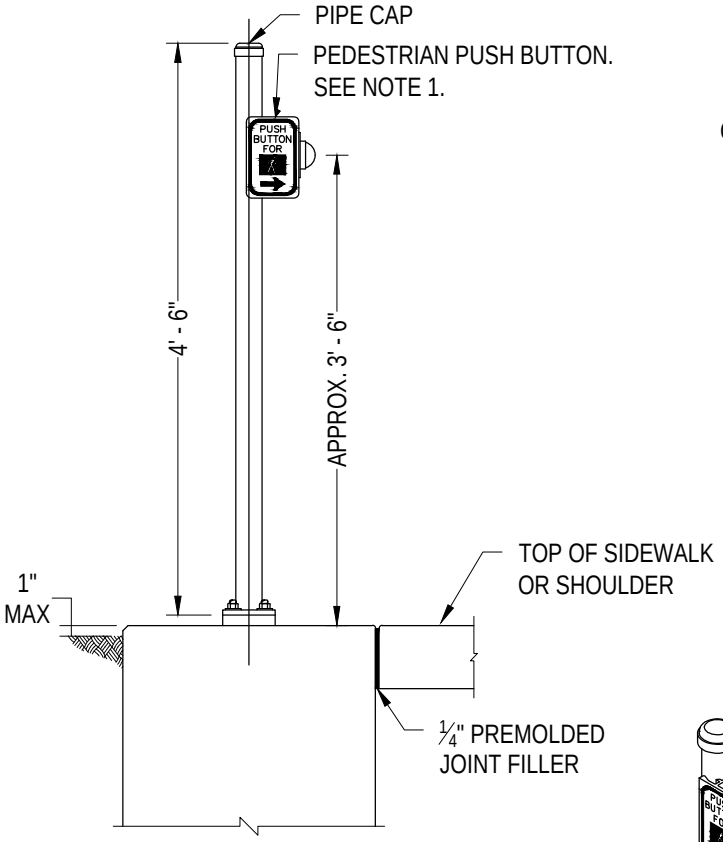

ELEVATION
WITHOUT LANDING

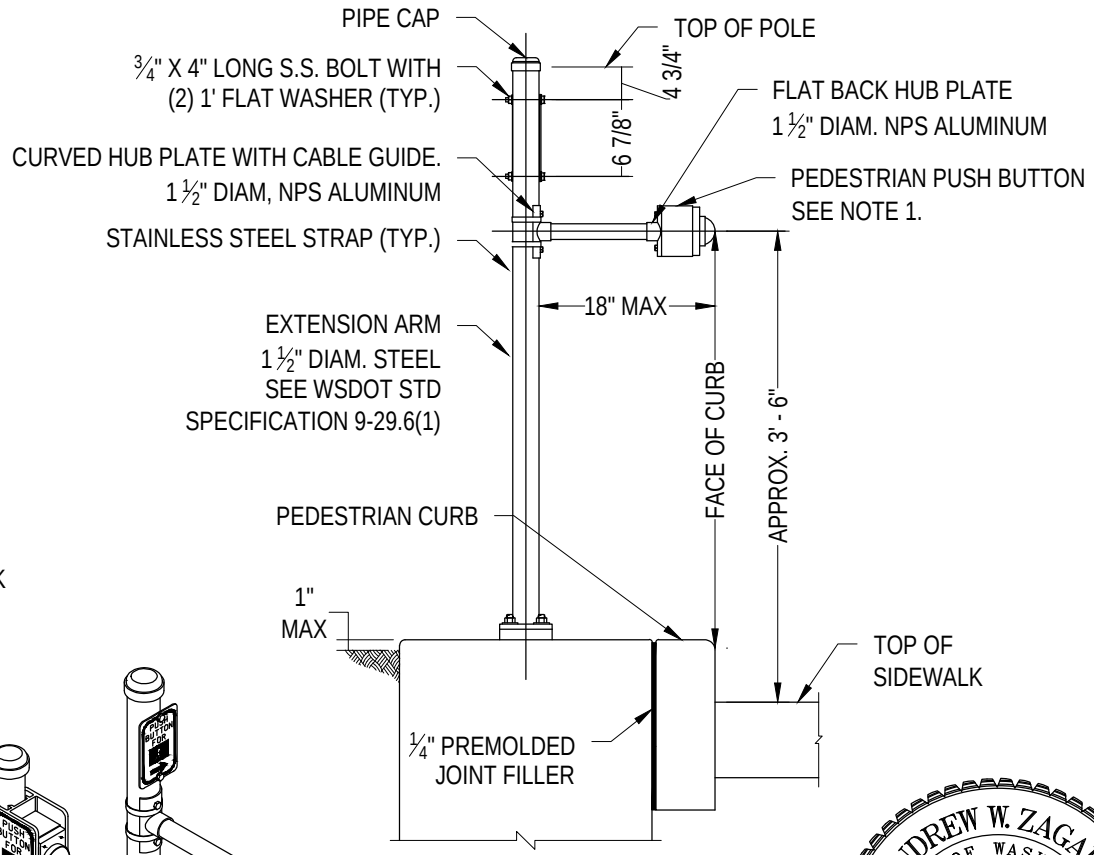

ELEVATION
WITH LANDING

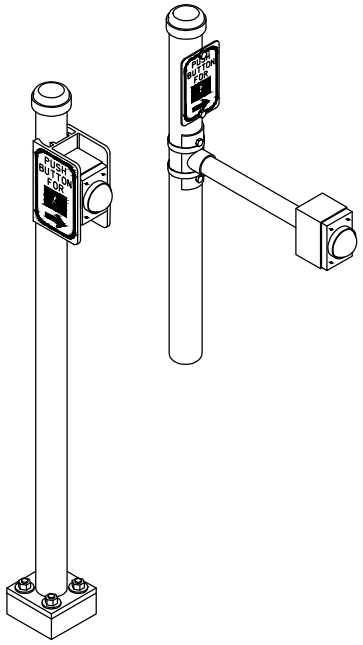

ISOMETRIC VIEW
PEDESTRIAN PUSH BUTTON POST

NOTES:

1. SEE WSDOT STD PLAN J-20.26
   FOR PEDESTRIAN PUSH BUTTON DETAILS.

Preliminary

11/09/2016 1:45:03 PM

CITY OF SAMMAMISH
DEPARTMENT OF PUBLIC WORKS

PEDESTRIAN PUSH BUTTON
POST

APPROVED BY
CITY ENGINEER _____ DATE _____

REV	DWN	CKD	DATE	FILE
	XXX	XXX	AUG-XX-2015	FIG09-17

REV. NO. X

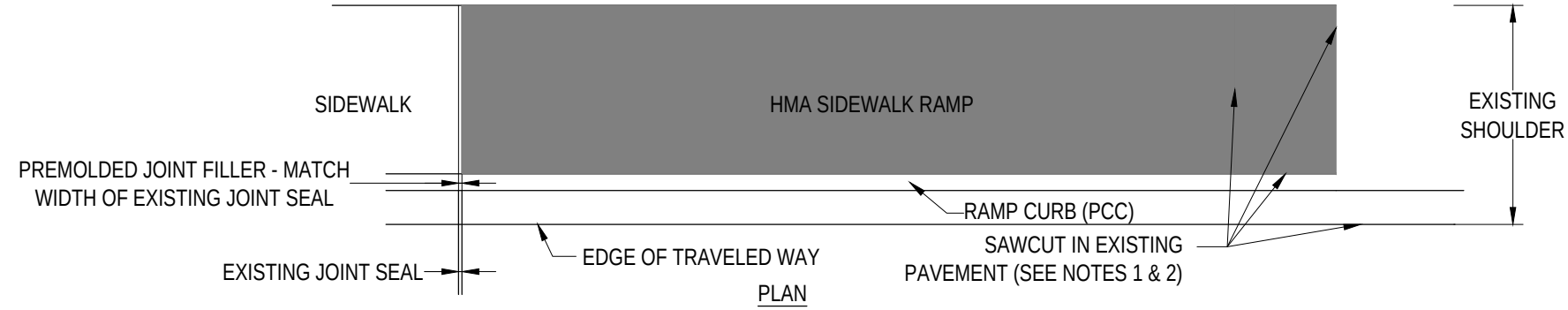

PLAN

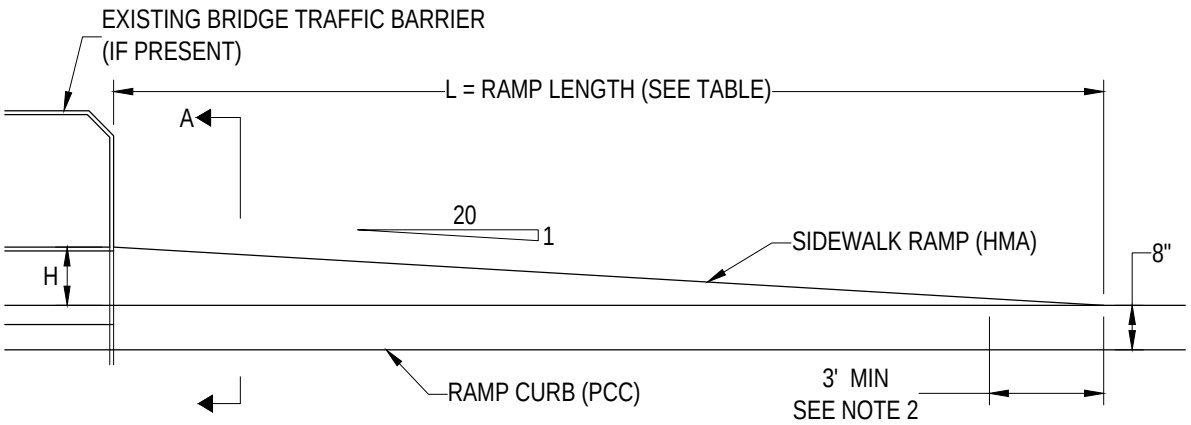

ELEVATION

NOTES:

1. THIS PLAN SHOWS A RETROFIT CONDITION. FOR DESIGN REFERENCE, "EXISTING" MAY BE INTERPRETED AS "TO BE CONSTRUCTED". FOR NEW CONSTRUCTION, OMIT THE EXISTING PAVEMENT AND SAWCUTS FROM THE DESIGN.

2. REMOVE A MINIMUM OF 3 FEET OF EXISTING PAVED SHOULDER AT THE BOTTOM OF THE RAMP, FOR EMBEDMENT OF NEW HMA.

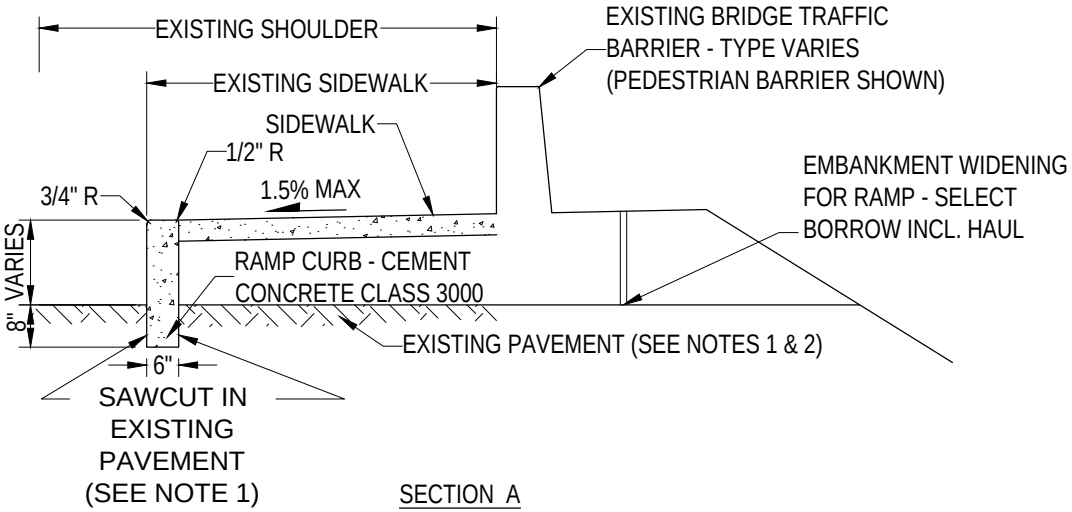

SECTION A

Preliminary

11/09/2016 1:45:06 PM

CITY OF SAMMAMISH
DEPARTMENT OF PUBLIC WORKS

SIDEWALK RAMP RETROFIT

APPROVED BY
CITY ENGINEER _____ DATE _____

REV	DWN	CKD	DATE	FILE
	XXX	XXX	AUG-XX-2015	FIG09-18

REV. NO. X

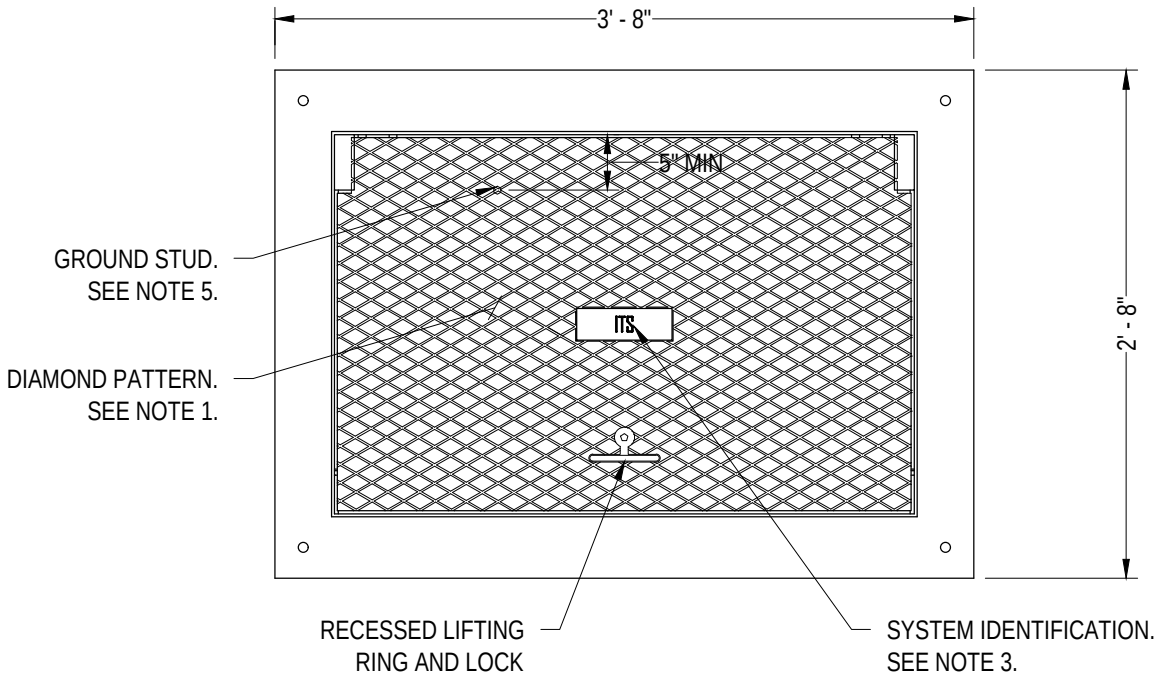

NOTES:

1. THE DIAMOND PATTERN SHALL BE A MINIMUM OF 3/32" THICK AND SHALL NOT BE USED IN PEDESTRIAN AND BICYCLE ZONES.

2. STANDARD DUTY PULL BOXES INSTALL IN SIDEWALKS, WALKWAYS, AND SHARED-USE PATHS SHALL HAVE A SLIP-RESISTANT COATING ON LID AND SHALL BE INSTALLED WITH THE SURFACE FLUSH WITH AND MATCHED TO THE GRADE OF THE SIDEWALK, WALKWAY, AND SHARED-USE PATHS. THE NON-SLIP SHALL BE IDENTIFIED WITH PERMANENT MARKING ON THE UNDERSIDE INDICATING THE TYPE OF SURFACE TREATMENT (SEE CONTRACT DOCUMENTS FOR DETAILS) AND THE YEAR OF MANUFACTURE. THE PERMANENT MARKING SHALL BE 1/8" INCH LINE THICKNESS FORMED WITH A STAINLESS STEEL WELD BEAD AND SHALL BE PLACED PRIOR TO HOT-DIP GALVANIZING.

3. THE SYSTEM IDENTIFICATION LETTERS SHALL BE 1/8" LINE THICKNESS FORMED BY ENGRAVING, CASTING, STAMPING, OR WITH A S.S WELD BEAD. DUCTILE IRON LID LETTERING SHALL BE RECESSED.

4. CEMENT CONCRETE SHALL BE CLASS 4000.

5. A 1/4-20 NCx3/4" STAINLESS STEEL GROUND STUD SHALL BE WELDED TO THE BOTTOM OF THE LID; INCLUDE (2) STAINLESS STEEL NUTS AND (2) STAINLESS STEEL FLAT WASHERS.

Preliminary

11/09/2016 1:45:11 PM

CITY OF SAMMAMISH
DEPARTMENT OF PUBLIC WORKS

SKID RESISTANT LID

APPROVED BY
CITY ENGINEER _____ DATE _____

REV	DWN	CKD	DATE	FILE
	XXX	XXX	AUG-XX-2015	FIG09-19

REV. NO. X