DRAWN BY: FERN LIDDELL

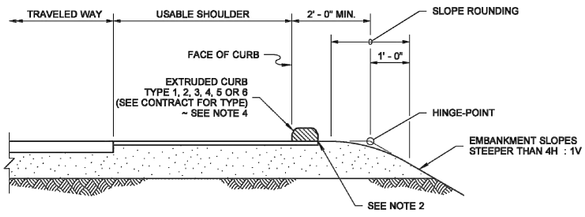

EXTRUDED CURB WITH SLOPE ROUNDING

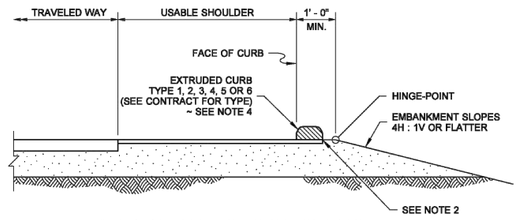

EXTRUDED CURB WITHOUT SLOPE ROUNDING

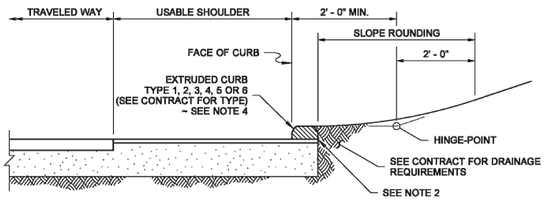

EXTRUDED CURB AT CUT SLOPE

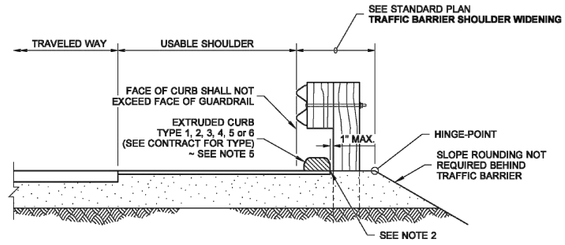

EXTRUDED CURB AT BEAM GUARDRAIL TYPE 1

NOTES

1. The installation of curb in areas with existing guardrail could require the removal and resetting of the guardrail or its components.
2. Extend shoulder pavement to provide a base for the extruded curb.
3. See Contract for exception to distances shown.
4. Type 3 and 6 curbs are not used on roadways with a posted speed greater than 40 mph.
5. Type 3 and 6 are not used under beam guardrail on roadways with a posted speed greater than 50 mph.
6. For extruded curb placement at Beam Guardrail Type 31, See **Standard Plan C-20.10.**
7. For extruded curb details, See **Standard Plan F-10.42.**

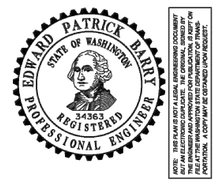

NOTE: THIS PLAN IS NOT A LEGAL ENGINEERING DOCUMENT BUT IS INTENDED TO SUPPORT THE ENGINEERING DOCUMENT THAT ENGINEER HAS APPROVED FOR PUBLICATION. IS KEPT ON FILE AT THE ENGINEER AND APPROVED FOR PUBLICATION, A COPY MAY BE OBTAINED UPON REQUEST.

EXTRUDED CURB PLACEMENT

STANDARD PLAN F-10.40-02

SHEET 1 OF 1 SHEET

APPROVED FOR PUBLICATION

Pasco Bakotich III — STATE DESIGN ENGINEER — *06/21/12* — DATE

Washington State Department of Transportation

DRAWN BY: BILL BERENS

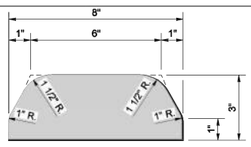

TYPE 1
(HOT MIX ASPHALT)

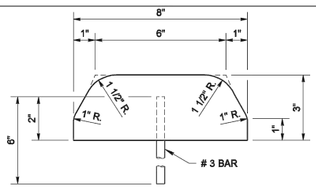

TYPE 4
(CEMENT CONCRETE)

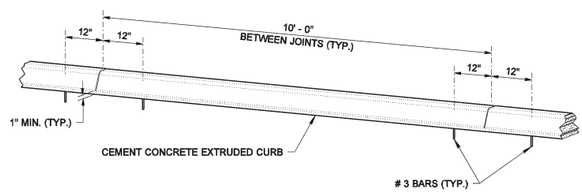

SPACING OF ANCHOR BARS
(FOR TYPES 4, 5, AND 6)

NOTE

JOINTS MAY BE FORMED DURING INSTALLATION USING A RIGID DIVIDER OR SAWCUT AFTER CONCRETE CURES TO MINIMUM STRENGTH.

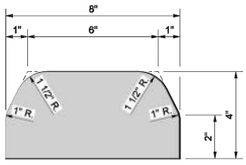

TYPE 2
(HOT MIX ASPHALT)

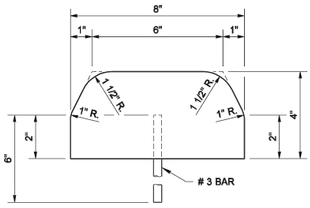

TYPE 5
(CEMENT CONCRETE)

NOTE: THIS PLAN IS NOT A LEGAL ENGINEERING DOCUMENT BUT IS INTENDED TO SUPPORT THE ENGINEERING DOCUMENT THAT ENGINEER HAS APPROVED FOR PUBLICATION. IS KEPT ON FILE AT THE ENGINEER AND APPROVED FOR PUBLICATION, A COPY MAY BE OBTAINED UPON REQUEST.

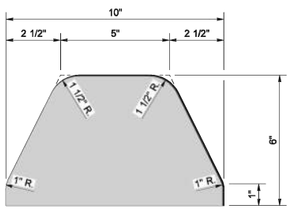

TYPE 3
(HOT MIX ASPHALT)

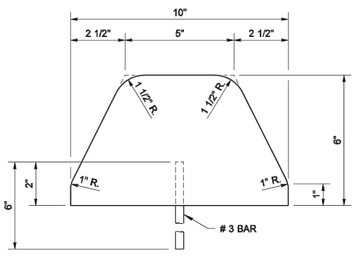

TYPE 6
(CEMENT CONCRETE)

EXTRUDED CURB

STANDARD PLAN F-10.42-00

SHEET 1 OF 1 SHEET

APPROVED FOR PUBLICATION

Ken L. Smith — STATE DESIGN ENGINEER — *01-23-07* — DATE

Washington State Department of Transportation

SHEET:	RD-1
OF:	XX
JOB NO.:	14630
DWG:	RDWY_DET

CITY OF SAMMAMISH

KING COUNTY WASHINGTON

212TH WAY SE IMPROVEMENTS

ROADWAY DETAILS

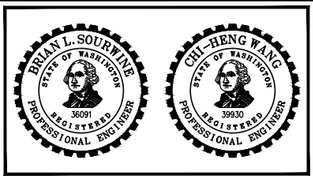

PRELIMINARY NOT FOR CONSTRUCTION

No.	REVISION	DATE	APPD

DATE:	FEB 2016
SCALE:	NOTED
DRAWN:	B.D.C
CHECKED:	
APPROVED:	

Gray & Osborne, Inc.
CONSULTING ENGINEERS
701 DEXTER AVENUE NORTH SUITE 200
SEATTLE, WASHINGTON 98109 • (206) 284-0860

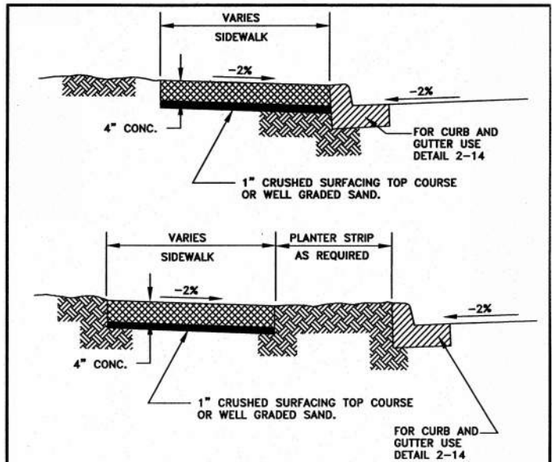

GENERAL NOTES:
1. CONCRETE DRIVEWAYS REQUIRE A MINIMUM DEPTH OF 6".

BUNYAMIN BEN YAZICI — STATE OF WASHINGTON — 26221 — REGISTERED PROFESSIONAL ENGINEER
EXPIRES: 4/30/01

CITY OF SAMMAMISH
DEPARTMENT OF PUBLIC WORKS
SIDEWALK
APPROVED BY CITY ENGINEER _____ DATE _____
DWN | CKD | DATE MARCH-15-2000 | FILE FIG02-09
REV

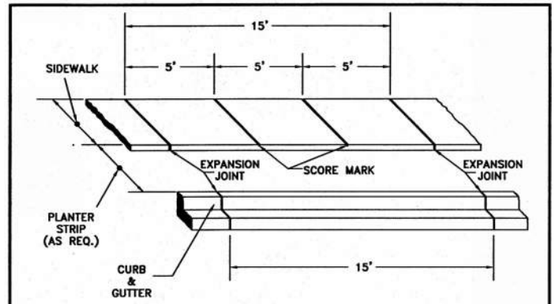

GENERAL NOTES:
1. EXPANSION JOINT MATERIAL TO BE 3/8" THICK PREMOLDED JOINT FILLER FULL THICKNESS OF CONCRETE.
2. FORM AND SUBGRADE INSPECTION REQUIRED BEFORE POURING CONCRETE.
3. SCORE MARKS SHALL BE ±1/8" WIDE BY ±1/4" DEEP. FOR SIDEWALKS OVER 8' IN WIDTH, A LONGITUDINAL SCORE MARK SHALL BE MADE ALONG CENTER OF WALK.
4. EXPANSION JOINTS SHALL BE INSTALLED IN CURB AND GUTTER AND IN SIDEWALK AT PC AND PT AT ALL CURB RETURNS. EXPANSION JOINTS SHALL BE PLACED IN SIDEWALK AT SAME LOCATIONS AS THOSE IN CURB AND GUTTER WHEN SIDEWALK IS ADJACENT TO CURB AND GUTTER, UNLESS OTHERWISE DIRECTED BY ENGINEER.

BUNYAMIN BEN YAZICI — STATE OF WASHINGTON — 26221 — REGISTERED PROFESSIONAL ENGINEER
EXPIRES: 4/30/01

CITY OF SAMMAMISH
DEPARTMENT OF PUBLIC WORKS
SIDEWALK SPACING
EXPANSION JOINTS & SCORE MARKS
APPROVED BY CITY ENGINEER _____ DATE _____
DWN | CKD | DATE MARCH-15-2000 | FILE FIG02-10
REV

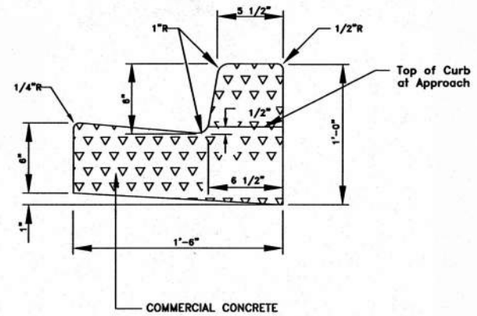

GENERAL NOTES:
1. EXPANSION JOINT MATERIAL TO BE 3/8" THICK PREMOLDED JOINT FILLER FULL THICKNESS OF CONCRETE SPACING.
2. FORM AND SUBGRADE INSPECTION REQUIRED BEFORE POURING CONCRETE.

BUNYAMIN BEN YAZICI — STATE OF WASHINGTON — 26221 — REGISTERED PROFESSIONAL ENGINEER
EXPIRES: 4/30/01

CITY OF SAMMAMISH
DEPARTMENT OF PUBLIC WORKS
CEMENT CONCRETE
CURB AND GUTTER
APPROVED BY CITY ENGINEER _____ DATE _____
DWN | CKD | DATE MARCH-15-2000 | FILE FIG02-14
REV

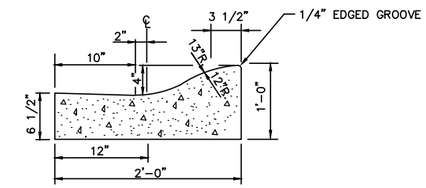

NOTES:
1. THE CURBS, GUTTERS AND SIDEWALKS SHALL HAVE EXPANSION JOINTS (3/8") AT INTERVALS OF NOT GREATER THAN 15'-0".
2. CEMENT CONCRETE SHALL BE CLASS 4000.
3. ROLLED CONCRETE CURB AND GUTTER SHALL BE INSTALLED AS SHOWN ON PLANS IN LOCATIONS AT 212TH AVENUE INTERSECTION.

ROLLED CONCRETE CURB AND GUTTER DETAIL
NOT TO SCALE

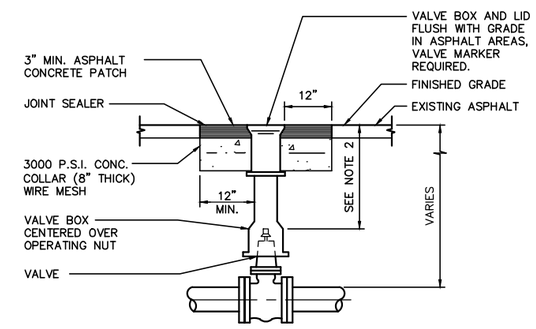

VALVE BOX IN ASPHALT AREA

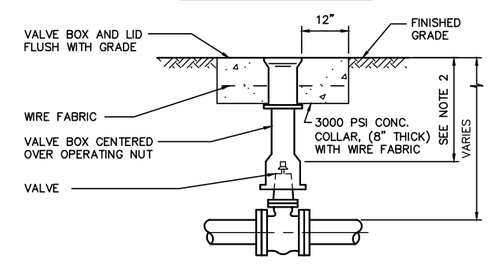

VALVE BOX IN UNIMPROVED AREA

NOTES:
1. EACH VALVE SHALL BE PROVIDED WITH AND ADJUSTABLE CAST IRON VALVE BOX OF 5 INCHES (5") INSIDE DIAMETER. VALVE BOXES SHALL HAVE A TOP SECTION WITH AN EIGHTEEN INCH (18") MIN. LENGTH. VALVE BOX EARS SHALL BE PLACED IN LINE WITH PIPE IT SERVES.
2. 15" MINIMUM, 36" MAXIMUM FOR OPERATOR NUT. EXTENSION MAY BE REQUIRED.

VALVE BOX ADJUSTMENT DETAIL
NOT TO SCALE

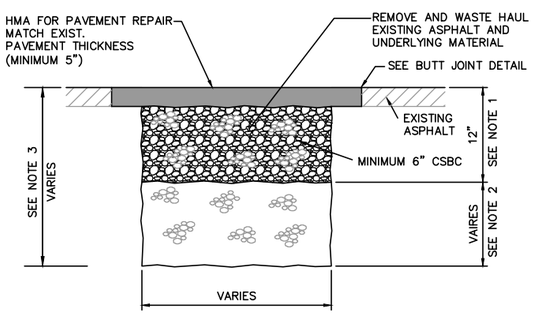

NOTES:
1. PAYMENT FOR EXCAVATION AND WASTE HAUL OF EXISTING MATERIAL FOR 12-INCHES BELOW EXISTING GRADE WILL BE MADE UNDER THE UNIT CONTRACT PRICE PER SQUARE YARD FOR "PAVEMENT REPAIR EXCAVATION INCL. HAUL."
2. WHEN DIRECTED BY THE CONTRACTING AGENCY THE CONTRACTOR SHALL EXCAVATE TO A FURTHER DEPTH. PAYMENT FOR EXCAVATION AND WASTE HAUL OF THIS ADDITIONAL MATERIAL SHALL BE MADE UNDER THE UNIT CONTRACT PRICE PER CUBIC YARD FOR "UNSUITABLE FOUNDATION EXCAVATION INCL. HAUL."
3. ALL BACKFILL MATERIAL SHALL BE CRUSHED SURFACING BASE COURSE AND SHALL BE PLACED TO THE BOTTOM OF THE EXISTING ASPHALT.

SUBGRADE REPAIR SECTION (FOR OVERLAY AREAS)
NOT TO SCALE

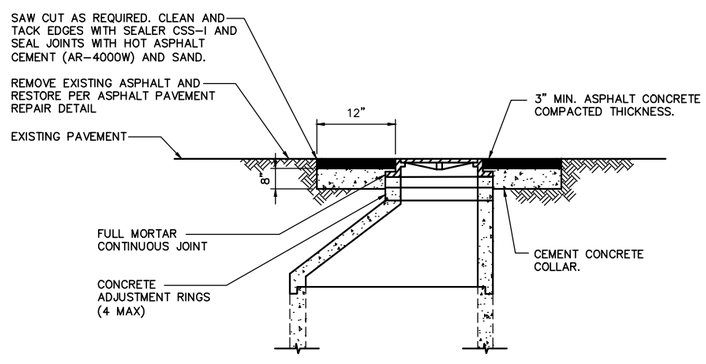

NOTES:
1. ALL JOINTS SHALL BE SEALED WITH MATERIALS AND IN A MANNER TO PREVENT "TRACKING" OF SEALANT.

MANHOLE OR CATCH BASIN GRADE ADJUSTMENT DETAIL
NOT TO SCALE

Gray & Osborne, Inc.
CONSULTING ENGINEERS
701 DEXTER AVENUE NORTH SUITE 200
SEATTLE, WASHINGTON 98109 • (206) 284-0860

DATE: FEB 2016	
SCALE: NOTED	
DRAWN: B.D.C	
CHECKED:	
APPROVED:	

PRELIMINARY NOT FOR CONSTRUCTION

No.	REVISION	DATE	APPD

CHI-CHENG WANG — STATE OF WASHINGTON — 19966 — REGISTERED PROFESSIONAL ENGINEER

BRIAN L. SOURWINE — STATE OF WASHINGTON — 16306 — REGISTERED PROFESSIONAL ENGINEER

CITY OF SAMMAMISH
WASHINGTON
KING COUNTY
212TH WAY SE IMPROVEMENTS
ROADWAY DETAILS

SHEET: RD-2
OF: XX
JOB NO.: 14630
DWG: RDWY_DET

M:\SAMMAM\14630 212th Way FINAL DESIGN\01 Design\Planset\RDWY_DET.dwg, 2/19/2016 3:53 PM, ----

NOTES:

THE CASTINGS SHALL BE GRAY-IRON CASTINGS, ASTM DESIGNATION A 48, CLASS 40. THE COVER AND SEAT SHALL BE MACHINED SO AS TO HAVE PERFECT CONTACT AROUND THE ENTIRE CIRCUMFERENCE AND FULL WIDTH OF BEARING SURFACE.

WHEN THE MONUMENT CASE AND COVER ARE PLACED IN CEMENT CONCRETE PAVEMENT THE CONCRETE BASE WILL BE NECESSARY.

APPROXIMATE WEIGHTS:
CASE 60 LBS.
COVER 19 LBS.
TOTAL 79 LBS.

PLAN OF COVER

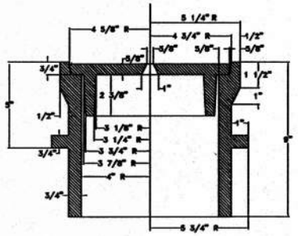

SECTION

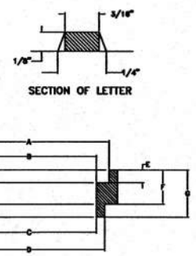

SECTION A–A

SECTION OF LETTER

PLAN

RISER RING

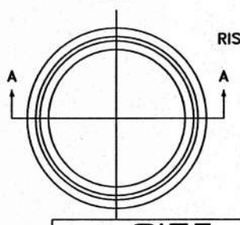

SIZE			
DIM	1-1/2"	2"	3"
A	10-1/2"	10-1/2"	10-1/2"
B	9-1/2"	9-1/2"	9-1/2"
C	8"	8"	8"
D	9"	9"	9"
E	3/4"	3/4"	3/4"
F	1-1/2"	2"	3"
G	2-1/4"	2-3/4"	3-3/4"

BUNYAMIN BEN YAZICI
STATE OF WASHINGTON
26221
REGISTERED
PROFESSIONAL ENGINEER
EXPIRES: 4/30/01

CITY OF SAMMAMISH
DEPARTMENT OF PUBLIC WORKS

MONUMENT CASE AND COVER WITH RISER

APPROVED BY CITY ENGINEER _____ DATE _____

REV	DWN	CKD	DATE	FILE
			MARCH-15-2000	FIG02-21

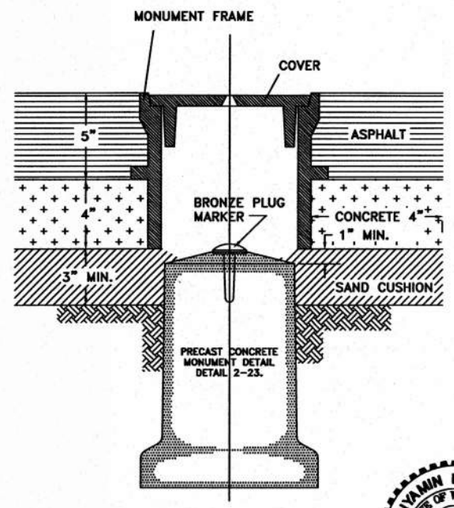

NOTE:
FOR USE PRIMARILY ON ARTERIAL STREETS, STREETS WITH BUS TRAFFIC AND TRUCK ROUTES.

BUNYAMIN BEN YAZICI
STATE OF WASHINGTON
26221
REGISTERED
PROFESSIONAL ENGINEER
EXPIRES: 4/30/01

CITY OF SAMMAMISH
DEPARTMENT OF PUBLIC WORKS

MONUMENT CASE AND COVER

APPROVED BY CITY ENGINEER _____ DATE _____

REV	DWN	CKD	DATE	FILE
			MARCH-15-2000	FIG02-22

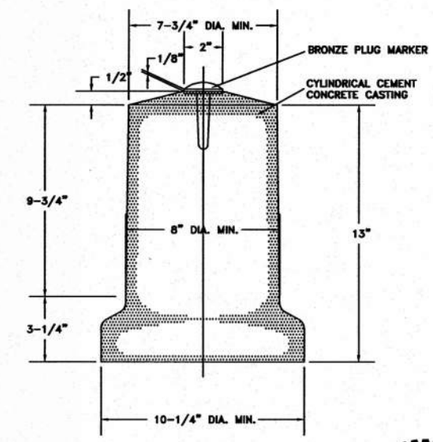

GENERAL NOTES:

MINIMUM ULTIMATE COMPRESSIVE STRENGTH OF CONCRETE CASTING AT 28 DAYS – 3000#.
MAXIMUM AGGRETE SIZE TO BE 1".

BUNYAMIN BEN YAZICI
STATE OF WASHINGTON
26221
REGISTERED
PROFESSIONAL ENGINEER
EXPIRES: 4/30/01

CITY OF SAMMAMISH
DEPARTMENT OF PUBLIC WORKS

PRECAST CONCRETE MONUMENT

APPROVED BY CITY ENGINEER _____ DATE _____

REV	DWN	CKD	DATE	FILE
			MARCH-15-2000	FIG02-23

Gray & Osborne, Inc.
CONSULTING ENGINEERS
701 DEXTER AVENUE NORTH SUITE 200
SEATTLE, WASHINGTON 98109 • (206) 284-0860

DATE: FEB 2016
SCALE: NOTED
DRAWN: B.D.C.
CHECKED:
APPROVED:

PRELIMINARY NOT FOR CONSTRUCTION

No.	REVISION	DATE	APPD

CHI-TENG WANG
STATE OF WASHINGTON
26026
REGISTERED
PROFESSIONAL ENGINEER

BRIAN L. SOURMINE
STATE OF WASHINGTON
36026
REGISTERED
PROFESSIONAL ENGINEER

CITY OF SAMMAMISH
KING COUNTY WASHINGTON
212TH WAY SE IMPROVEMENTS
ROADWAY DETAILS

SHEET: RD-3
OF: XX
JOB NO.: 14630
DWG: RDWY_DET

M:\SAMMAM\14630 212th Way FINAL DESIGN\01 Design\Planset\RDWY_DET.dwg, 2/19/2016 3:53 PM, ----

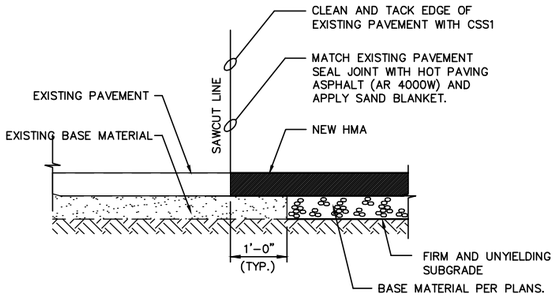

BUTT JOINT DETAIL

NOT TO SCALE

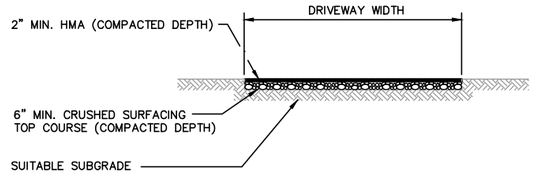

HMA DRIVEWAY REPAIR

NOT TO SCALE

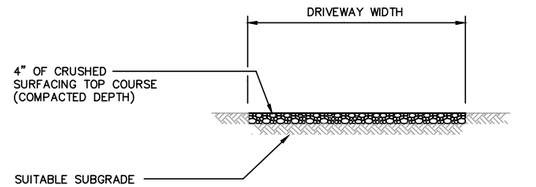

CRUSHED ROCK DRIVEWAY REPAIR

NOT TO SCALE

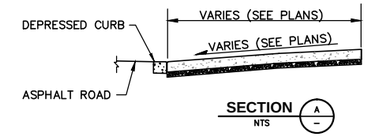

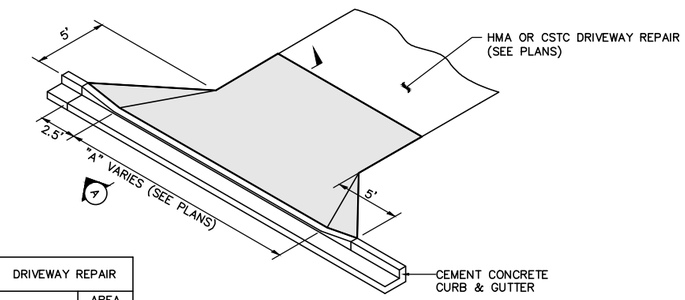

ISOMETRIC VIEW

DRIVEWAY DETAIL

NOT TO SCALE

DRIVEWAY SCHEDULE

STREET	DRIVEWAY #	STATION	SIDE	"A"	DRIVEWAY REPAIR MATERIAL	AREA (SY)
		DRIVEWAY LOCATION				
212th WAY	D1	1+82	RIGHT	PROTECT EXISTING CONCRETE		
	D2	2+46	RIGHT	22	CSTC	10.7
	D3	5+64	LEFT	39	HMA	25.5
	D4	9+38	LEFT	36	HMA	25.3
	D5	12+11	LEFT	38	5'-HMA	17.8
					CSTC	12.5
	D6	13+39	LEFT	29	5'-HMA	11.8
					CSTC	7.7
	D7	14+49	LEFT	115	CSTC	124.9
	D8	14+91	RIGHT	55	HMA	
	D9	19+91	LEFT	28	CSTC	
	D10	20+15	RIGHT	30	HMA	508.4
	D11	21+48	RIGHT	30		
	D12	31+92	LEFT	36	5'-HMA	28.8
					CSTC	93.3

NOTE: CONTRACTOR SHALL CONFIRM ALL DRIVEWAY APPROACH STATIONS AND WIDTHS WITH CONTRACTING AGENCY PRIOR TO INSTALLATION.

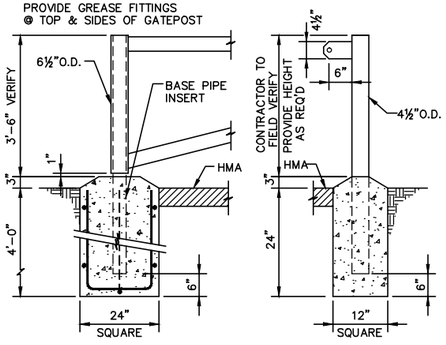

GATE SUPPORT DETAIL HOLD OPEN POST DETAIL

TRAFFIC CONTROL GATE SCHEDULE

APPROXIMATE LOCATION	W
20+31, RT	21'-6"
21+46, RT	21'-6"

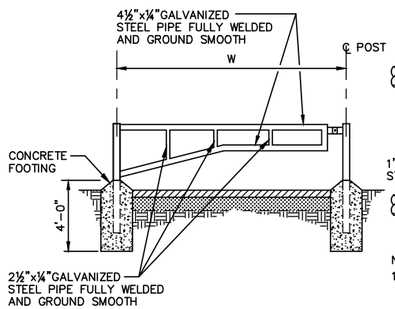

TRAFFIC CONTROL GATE

NOT TO SCALE

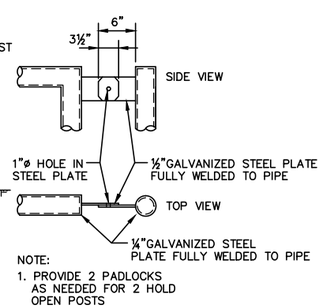

NOTE:
1. PROVIDE 2 PADLOCKS AS NEEDED FOR 2 HOLD OPEN POSTS

PADLOCK EYE DETAIL

FENCE SCHEDULE

APPROXIMATE LOCATION	SIDE	TYPE
STA. 19+76 TO STA. 21+29 (APPROX. 115 FT)	LT	4' CHAIN LINK FENCE

NOTES:
CONTRACTOR SHALL CONFIRM FENCE LOCATIONS/OFFSETS WITH CONTRACTING AGENCY PRIOR TO INSTALLATION.

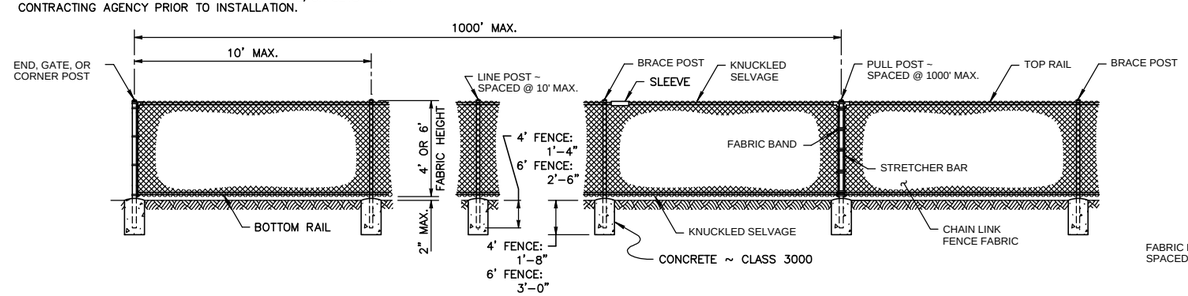

POST AND RAIL SPECIFICATIONS				
MEMBER	PIPE	ROLL FORMED		H – COLUMN
	NOM. SIZE (SCH. 40)	SECTION	WEIGHT (lb/ft)	WEIGHT (lb/ft)
END, CORNER, OR PULL POST	2 1/2" DIAM.	A	5.10	
LINE OR BRACE POST	2" DIAM.	B	2.40	3.26
BRACE OR TOP RAIL	1 1/4" DIAM.	C	1.35	
GATE POST	3 1/2" DIAM.			

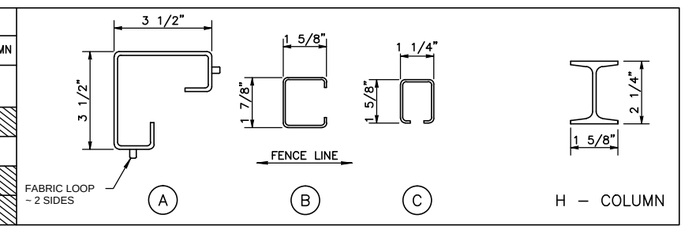

4' (MODIFIED TYPE 6) AND 6' (MODIFIED TYPE 1) CHAIN LINK FENCE

NOT TO SCALE

NOTES

1. ALL CONCRETE POST BASES SHALL BE 10" MINIMUM DIAMETER.
2. TENSION WIRE SHALL BE PLACED WITHIN THE LIMITS OF THE FIRST FULL FABRIC WEAVE.
3. DETAILS ARE ILLUSTRATIVE AND SHALL NOT LIMIT HARDWARE DESIGN OR POST SELECTION OF ANY PARTICULAR FENCE TYPE.

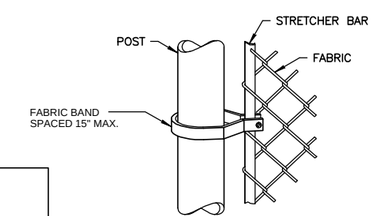

METHOD OF FASTENING STRETCHER BAR TO POST
(SHOWN FOR ROUND POST)

Gray & Osborne, Inc.
CONSULTING ENGINEERS
701 DEXTER AVENUE NORTH SUITE 200
SEATTLE, WASHINGTON 98109 • (206) 284-0860

DATE: FEB 2016
SCALE: NOTED
DRAWN: B.D.C
CHECKED: Y.B.P.
APPROVED: B.L.S.

PRELIMINARY NOT FOR CONSTRUCTION

No.	REVISION	DATE	APPD

CHI-HENG HANG — STATE OF WASHINGTON — 40309 — REGISTERED PROFESSIONAL ENGINEER

BRIAN L. SOURLINE — STATE OF WASHINGTON — 40309 — REGISTERED PROFESSIONAL ENGINEER

CITY OF SAMMAMISH
WASHINGTON
KING COUNTY
212TH WAY SE IMPROVEMENTS
ROADWAY DETAILS

SHEET: RD-4
OF: XX
JOB NO.: 14630
DWG: RDWY_DET

M:\SAMMAM\14630 212th Way FINAL DESIGN\01 Design\Planset\RDWY_DET.dwg, 2/19/2016 3:54 PM, ----

DRAWN BY: FERN LIDDELL

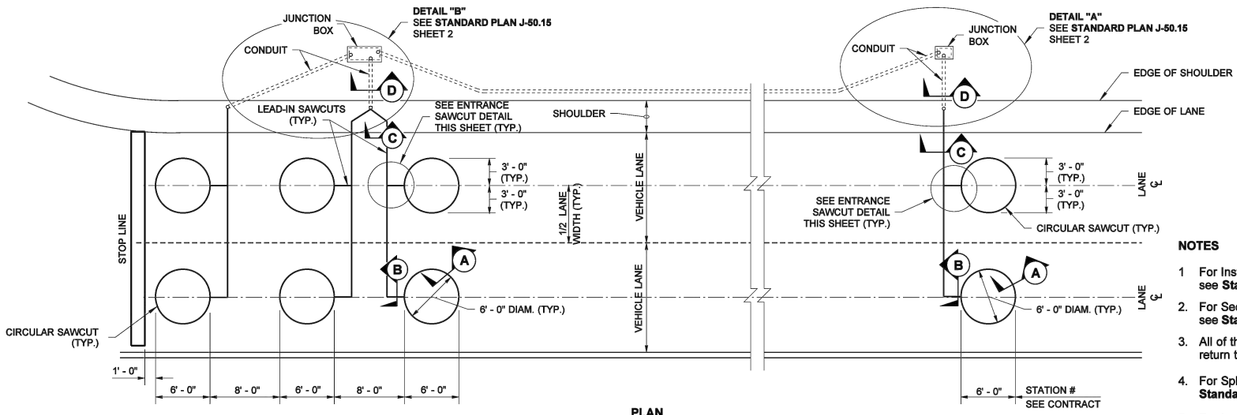

TYPE 3 STOP LINE LOOPS

PLAN

TYPE 3 ADVANCE LOOPS

NOTES

1. For Installation Notes and Details see **Standard Plan J-50.15.**
2. For Sections A, B, C, and D, see **Standard Plan J-50.15.**
3. All of the loop lead-in wires shall return to the Junction Box.
4. For Splice Detail, see **Standard Plan J-50.15.**
5. For Loop numbering Layout Details, see **sheet 3.**
6. For additional Induction Loop Details, see **Standard Plan J-50.15.**

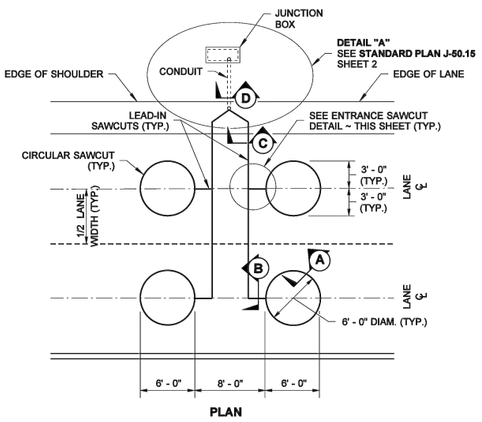

PLAN

TYPE 3 SAMPLING LOOPS

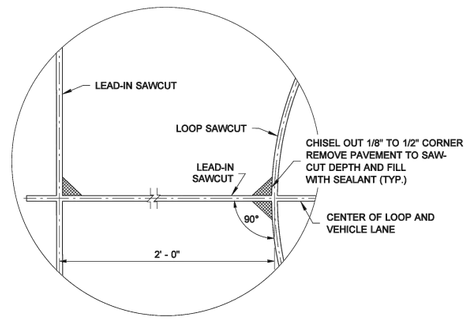

ENTRANCE SAWCUT DETAIL

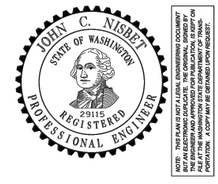

NOTE: THIS PLAN IS NOT A LEGAL ENGINEERING DOCUMENT UNLESS AND UNTIL IT BEARS THE ORIGINAL WET SEAL OF THE ENGINEER AND APPROVED FOR PUBLICATION. IS KEPT ON FILE AT GRAY & OSBORNE, INC. CONSULTING ENGINEERS. PORTATION. A COPY MAY BE OBTAINED UPON REQUEST.

TYPE 3 INDUCTION LOOP

STANDARD PLAN J-50.12-00

SHEET 1 OF 3 SHEETS

APPROVED FOR PUBLICATION

Pasco Bakotich III *06-03-11*

STATE DESIGN ENGINEER DATE

Washington State Department of Transportation

DRAWN BY: FERN LIDDELL

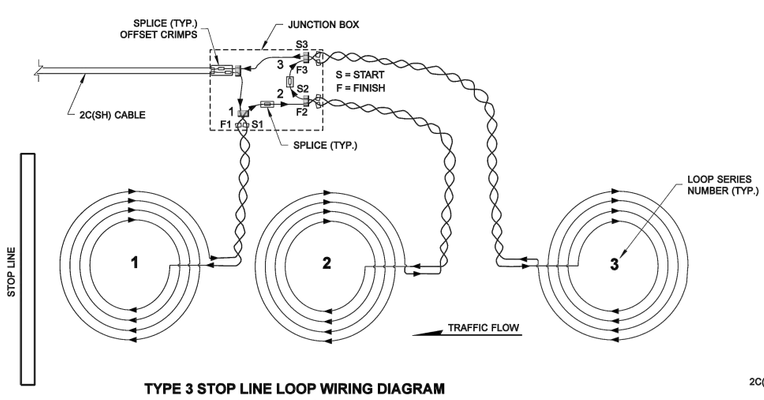

TYPE 3 STOP LINE LOOP WIRING DIAGRAM

SERIES SPLICE SHOWN

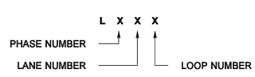

LOOP NUMBER MARKING DETAIL

NOTES

Loop numbering layout will be simillar to Loop Numbering Layout Detail, Sheet 3

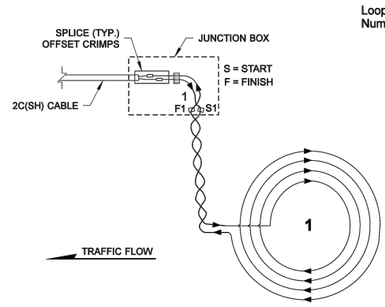

TYPE 3 ADVANCE LOOP WIRING DIAGRAM

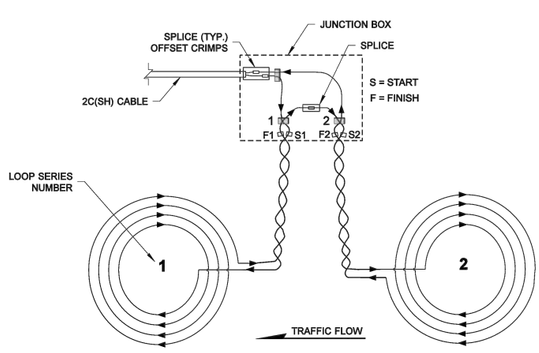

TYPE 3 SAMPLING LOOP WIRING DIAGRAM

SERIES SPLICE SHOWN

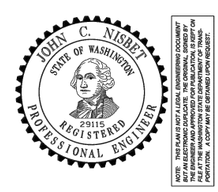

NOTE: THIS PLAN IS NOT A LEGAL ENGINEERING DOCUMENT UNLESS AND UNTIL IT BEARS THE ORIGINAL WET SEAL OF THE ENGINEER AND APPROVED FOR PUBLICATION. IS KEPT ON FILE AT GRAY & OSBORNE, INC. CONSULTING ENGINEERS. PORTATION. A COPY MAY BE OBTAINED UPON REQUEST.

TYPE 3 INDUCTION LOOP

STANDARD PLAN J-50.12-00

SHEET 2 OF 3 SHEETS

APPROVED FOR PUBLICATION

Pasco Bakotich III *06-03-11*

STATE DESIGN ENGINEER DATE

Washington State Department of Transportation

SHEET: RD-5
OF: XX
JOB NO.: 14630
DWG: RDWY_DET

CITY OF SAMMAMISH

KING COUNTY WASHINGTON

212TH WAY SE IMPROVEMENTS

ROADWAY DETAILS

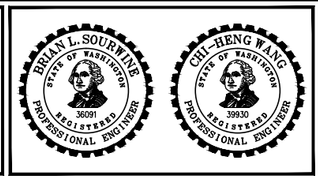

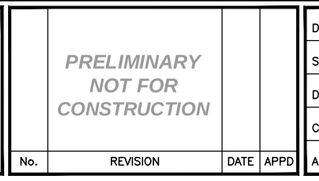

PRELIMINARY NOT FOR CONSTRUCTION

No.	REVISION	DATE	APPD

DATE:	FEB 2016
SCALE:	NOTED
DRAWN:	B.D.C
CHECKED:	
APPROVED:	

Gray & Osborne, Inc.
CONSULTING ENGINEERS
701 DEXTER AVENUE NORTH SUITE 200
SEATTLE, WASHINGTON 98109 • (206) 284-0860

DRAWN BY: FERN LIDDELL

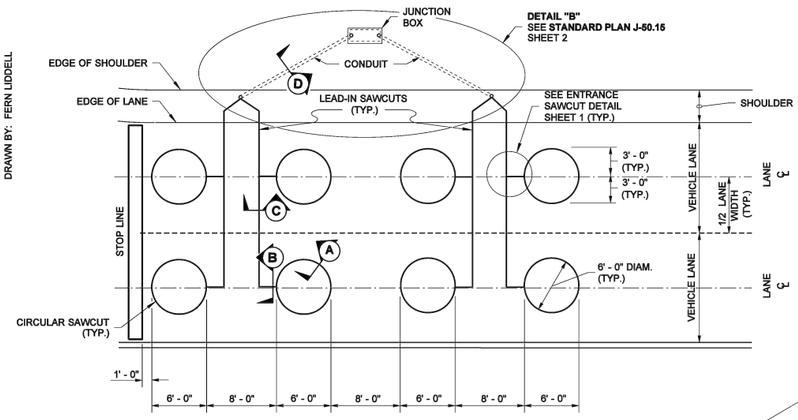

PLAN

TYPE 3A STOP LINE LOOPS

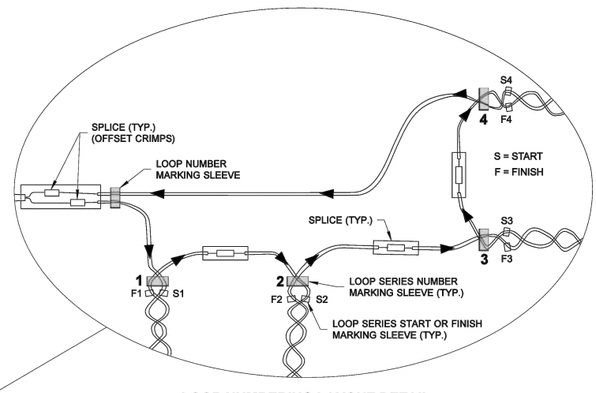

LOOP NUMBERING LAYOUT DETAIL

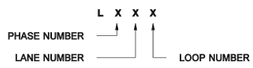

LOOP NUMBER MARKING DETAIL

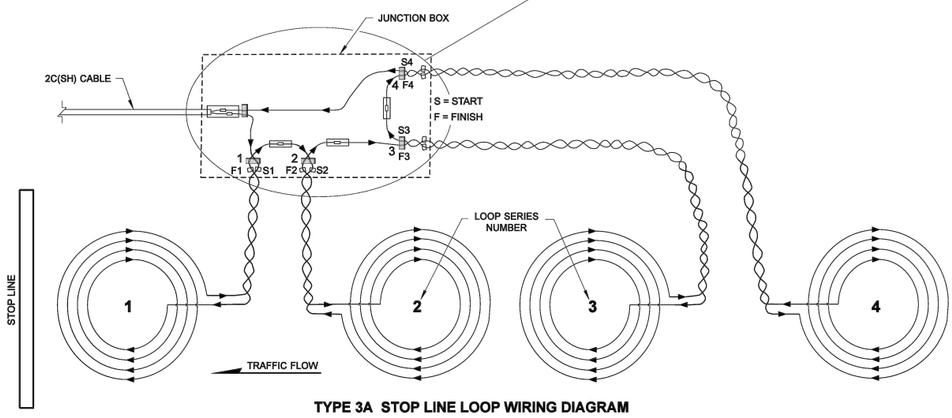

TYPE 3A STOP LINE LOOP WIRING DIAGRAM

SERIES SPLICE SHOWN

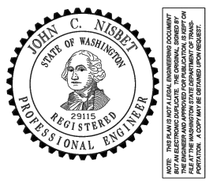

NOTE: THIS PLAN IS NOT A LEGAL ENGINEERING DOCUMENT UNLESS IT BEARS THE ORIGINAL WET SEAL OF THE PROFESSIONAL ENGINEER WHOSE NAME APPEARS ABOVE. THE ENGINEER AND APPROVED FOR PUBLICATION, IS KEPT ON FILE AT GRAY & OSBORNE, INC. CONSULTING ENGINEERS. THIS PLAN IS NOT A LEGAL DOCUMENT UNLESS IT BEARS THE ORIGINAL WET SEAL OF THE PROFESSIONAL ENGINEER WHOSE NAME APPEARS ABOVE. THE ENGINEER AND APPROVED FOR PUBLICATION, A COPY MAY BE OBTAINED UPON REQUEST.

TYPE 3 INDUCTION LOOP

STANDARD PLAN J-50.12-00

SHEET 3 OF 3 SHEETS

APPROVED FOR PUBLICATION

Pasco Bakotich III — STATE DESIGN ENGINEER — *06-03-11* — DATE

Washington State Department of Transportation

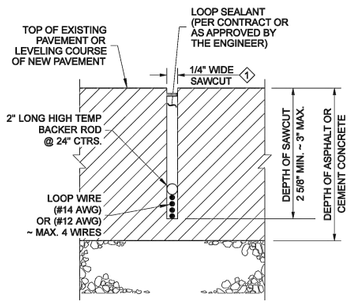

SECTION A

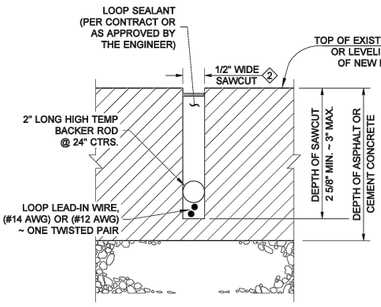

SECTION B

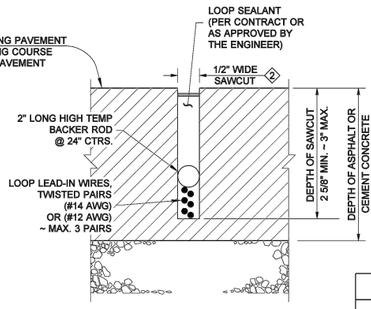

SECTION C

NOTES

1. Fill the conduit trench to the bottom of the existing or new surfacing with CSTC, sand or controlled density fill. See **Standard Specifications Section 2-09.3(1)E**.
2. Minor Regional variations are allowed in the soft pocket closure. Consult with the Engineer or see the Contract for additional requirements.
3. Conductors shall be snug to the bottom of the sawcut. High temperature backer rod shall be snug to the conductors and sides of cut.
4. Fill the sealant to within 1/8" to 3/16" from top of saw cut.
5. See **Standard Plan J-40.10** for additional Junction Box details.

PVC CONDUIT SIZING TABLE					
LOOP LEAD PAIRS	1 - 4	5 - 10	11 - 16	17 - 22	23 - 28
NUMBER AND SIZE OF CONDUITS	1 - 2"	2 - 2"	3 - 2"	4 - 2"	3 - 3"

1 ADD 1/16" TO THE SAWCUT FOR IMSA 51 - 7 CONDUCTORS

2 ADD 1/8" TO THE SAWCUT FOR IMSA 51 - 7 CONDUCTORS

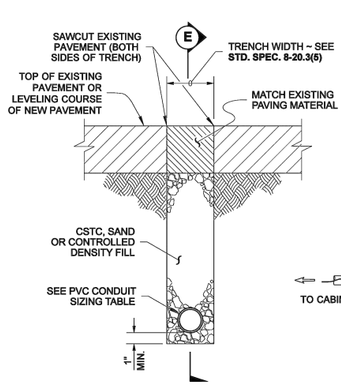

SECTION D

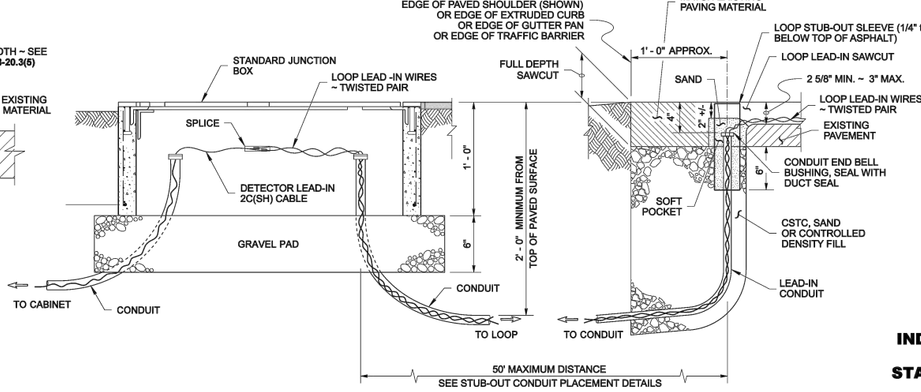

JUNCTION BOX PLACEMENT

SEE NOTE 5

LEAD-IN CONDUIT SECTION

MAX. 50 FT POCKET SECTION

SECTION E

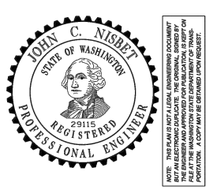

NOTE: THIS PLAN IS NOT A LEGAL ENGINEERING DOCUMENT UNLESS IT BEARS THE ORIGINAL WET SEAL OF THE PROFESSIONAL ENGINEER WHOSE NAME APPEARS ABOVE. THE ENGINEER AND APPROVED FOR PUBLICATION, IS KEPT ON FILE AT GRAY & OSBORNE, INC. CONSULTING ENGINEERS. THIS PLAN IS NOT A LEGAL DOCUMENT UNLESS IT BEARS THE ORIGINAL WET SEAL OF THE PROFESSIONAL ENGINEER WHOSE NAME APPEARS ABOVE. THE ENGINEER AND APPROVED FOR PUBLICATION, A COPY MAY BE OBTAINED UPON REQUEST.

INDUCTION LOOP DETAILS

STANDARD PLAN J-50.15-00

SHEET 1 OF 3 SHEETS

APPROVED FOR PUBLICATION

Pasco Bakotich III — STATE DESIGN ENGINEER — *06-03-11* — DATE

Washington State Department of Transportation

JOB NO.: 14630
DWG: RDWY_DET

SHEET: RD-6
OF: XX

CITY OF SAMMAMISH

KING COUNTY WASHINGTON

212TH WAY SE IMPROVEMENTS

ROADWAY DETAILS

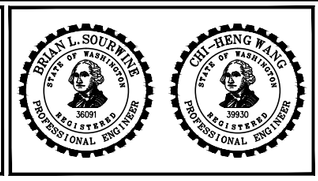

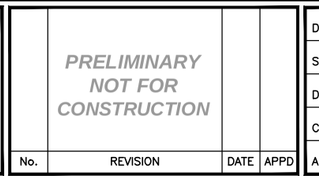

PRELIMINARY NOT FOR CONSTRUCTION

No.	REVISION	DATE	APPD

DATE: FEB 2016
SCALE: NOTED
DRAWN: B.D.C
CHECKED:
APPROVED:

Gray & Osborne, Inc.
CONSULTING ENGINEERS
701 DEXTER AVENUE NORTH SUITE 200
SEATTLE, WASHINGTON 98109 • (206) 284-0860

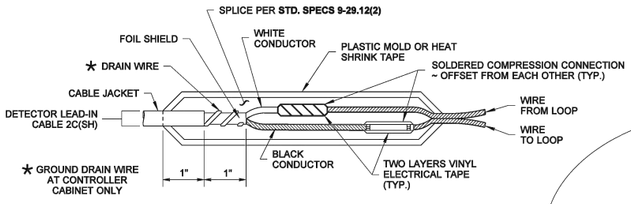

SPLICE DETAIL

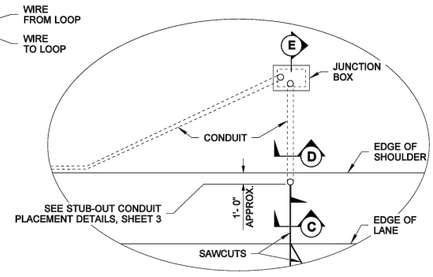

DETAIL "A"

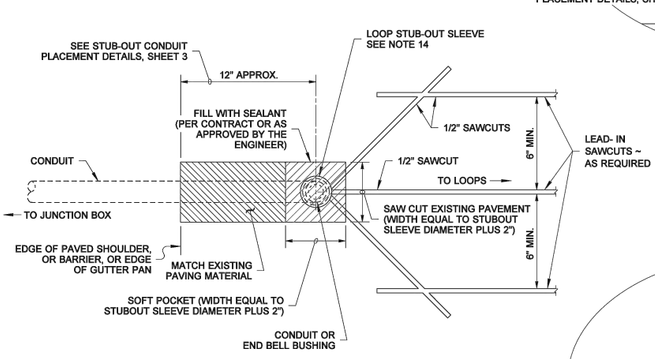

PLAN
SAWCUT AND CONDUIT CONNECTION

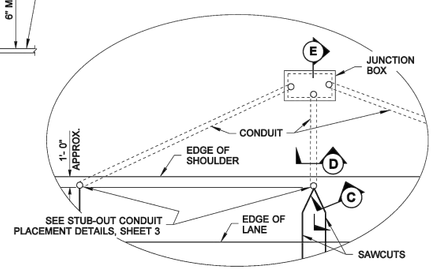

DETAIL "B"

LOOP INSTALLATION NOTES

1. Install the Junction Box and the stub-out conduit with PVC sleeve. Conduit for the loop stub-out shall be as required in the conduit size table shown on sheet 1 of this set.
2. Lay out loops and loop lead-ins to miss cracks/joints in road, when possible. Maintain 18" minimum clearance from manholes and valve boxes.
3. The opening around the loop stub shall be patched with matching paving material if opened larger than PVC sleeve + 2".
4. Sawcut the loop slots and the lead-in slots. Wash/dry cuts. File edges to remove burr of all saw-cuts into stub out sleeve.
5. Lay out the loop wire starting at the Junction Box, allowing 5' minimum slack.
6. Install the wire in the loop slot as shown.
7. Finish laying out the wire at the Junction Box and identify the leads with the loop number, the "S" for start and the "F" for the finish, the loop series number, and the loop lead-in conductor number.
8. Twist each pair of the lead-in wires a minimum of two times per foot each foot, from the loop to the Junction Box. Reverse the direction of the twist for each successive pair installed. Seal loops/sawcuts.
9. Construct a supplemental splice containing any series loop connections in the adjacent junction box as required in the plans. Supplemental splices are subject to the same requirements shown for the loop lead-in and the shielded cable splice.
10. Splice the loop lead-ins to the shielded cable as noted in the Contract.
11. All loop circuits shall be tested per **Standard Specifications 8-20.3(14)D** once installation is complete.
12. Existing stubouts shall be upgraded as necessary to conform to the conduit size table shown on sheet 1.
13. All loop lead-in sawcuts parallel to lane edge shall be at least 12" from edge of pavement and within six inches outside of lane or fog line when possible. Maintain 12" separation between parallel cuts or joints.
14. The loop stub-out sleeve shall have an inside diameter 1" larger than the outside diameter of the End Bell Bushing. Plug conduit and fill sleeve with sand untill loops are installed to keep out Hot Asphalt during paving operations.

JOHN C. NISBET
STATE OF WASHINGTON
29115
REGISTERED
PROFESSIONAL ENGINEER

NOTE: THIS PLAN IS NOT A LEGAL ENGINEERING DOCUMENT UNLESS AND UNTIL IT BEARS THE ORIGINAL SEAL AND SIGNATURE OF THE ENGINEER AND APPROVED FOR PUBLICATION. IS SUBJECT ON FILE AT THE WASHINGTON STATE DEPARTMENT OF TRANSPORTATION. A COPY MAY BE OBTAINED UPON REQUEST.

INDUCTION LOOP DETAILS

STANDARD PLAN J-50.15-00

SHEET 2 OF 3 SHEETS

APPROVED FOR PUBLICATION
Pasco Bakotich III *06-03-11*
STATE DESIGN ENGINEER DATE
Washington State Department of Transportation

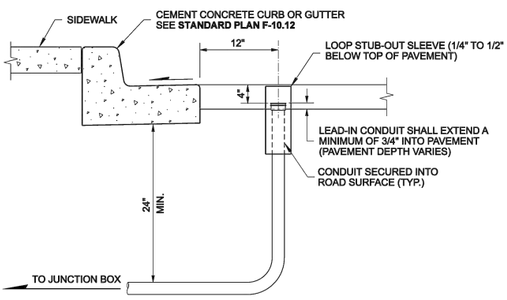

STUB-OUT DETAIL
WITH CEMENT CONCRETE CURB OR GUTTER

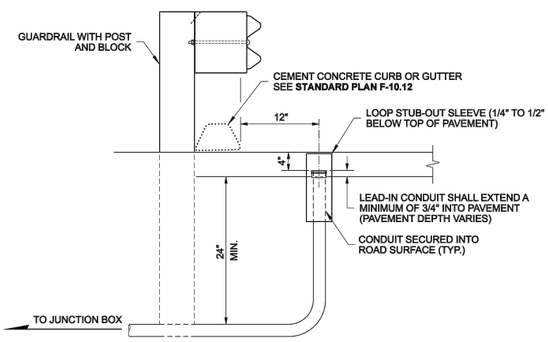

STUB-OUT DETAIL
WITH GUARDRAIL AND CURB

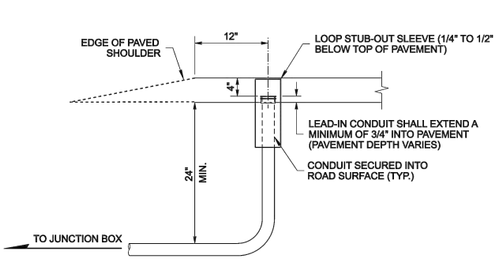

STUB-OUT DETAIL
WITH ROADWAY

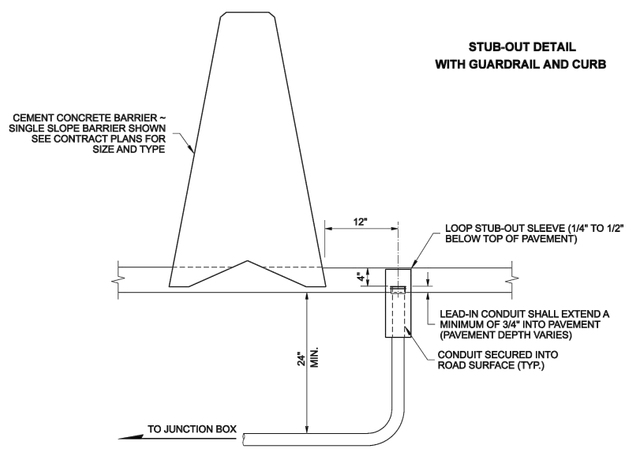

STUB-OUT DETAIL WITH
CEMENT CONCRETE BARRIER

STUBOUT CONDUIT PLACEMENT DETAILS

JOHN C. NISBET
STATE OF WASHINGTON
29115
REGISTERED
PROFESSIONAL ENGINEER

NOTE: THIS PLAN IS NOT A LEGAL ENGINEERING DOCUMENT UNLESS AND UNTIL IT BEARS THE ORIGINAL SEAL AND SIGNATURE OF THE ENGINEER AND APPROVED FOR PUBLICATION. IS SUBJECT ON FILE AT THE WASHINGTON STATE DEPARTMENT OF TRANSPORTATION. A COPY MAY BE OBTAINED UPON REQUEST.

INDUCTION LOOP DETAILS

STANDARD PLAN J-50.15-00

SHEET 3 OF 3 SHEETS

APPROVED FOR PUBLICATION
Pasco Bakotich III *06-03-11*
STATE DESIGN ENGINEER DATE
Washington State Department of Transportation

SHEET: RD-7
OF: XX
JOB NO.: 14630
DWG: RDWY_DET

CITY OF SAMMAMISH
KING COUNTY WASHINGTON
212TH WAY SE IMPROVEMENTS
ROADWAY DETAILS

BRIAN L. SOURKINE — STATE OF WASHINGTON — 36091 — REGISTERED PROFESSIONAL ENGINEER
CHI-HENG WANG — STATE OF WASHINGTON — 39930 — REGISTERED PROFESSIONAL ENGINEER

PRELIMINARY NOT FOR CONSTRUCTION

No.	REVISION	DATE	APPD

DATE: FEB 2016
SCALE: NOTED
DRAWN: B.D.C
CHECKED:
APPROVED:

Gray & Osborne, Inc.
CONSULTING ENGINEERS
701 DEXTER AVENUE NORTH SUITE 200
SEATTLE, WASHINGTON 98109 • (206) 284-0860

DRAWN BY: FERN LIDDELL

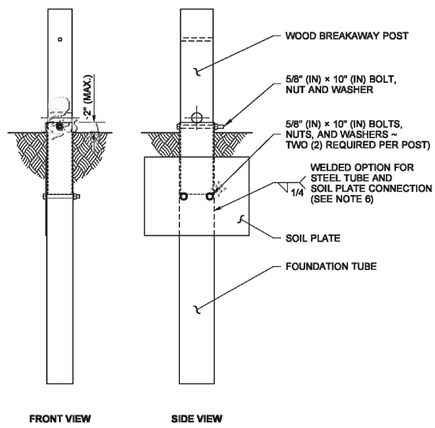

ANCHOR POST ASSEMBLY

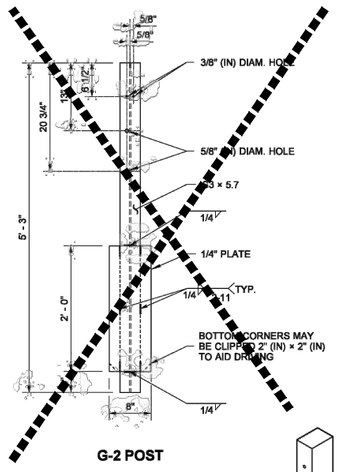

G-2 POST

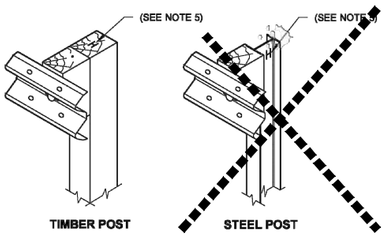

PARTIAL ASSEMBLY DETAIL

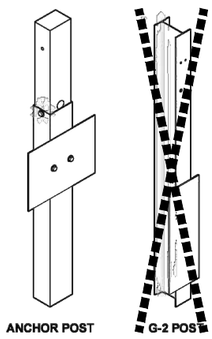

ISOMETRIC

NOTES

1. Wood posts for all guardrail placement plans shall be 6 × 8 except where noted otherwise.
2. Lower hole is for Rub Rail of Type 2 and Type 3 Beam Guardrail.
3. W6×8.5 or W6×9 steel posts and timber blocks are alternates for 6×8 timber posts and blocks. W6×15 steel posts and timber blocks are alternates for 10×10 timber posts and blocks.
4. Holes shall be located on approaching traffic side of web.
5. When "Beam Guardrail Type - __ Ft. Long Post" is specified in the Contract, the post length shall be stamped with numbers, 1 1/2" (in) min. high and 3/4" (in) wide at the location where the letter "H" is shown in the ASSEMBLY DETAIL. For wood post applications, the letter shall be stamped to a minimum depth of 1/4" (in). For steel post applications, the letter shall be legible after the post is galvanized. After post installation, it shall be the Contractor's responsibility to ensure the stamped numbers remain visible.
6. Soil plate may be welded to foundation tube. If so, holes in soil plate and foundation tube may be omitted.

MODIFIED
BEAM GUARDRAIL POSTS AND BLOCKS
STANDARD PLAN C-1b
SHEET 1 OF 2 SHEETS

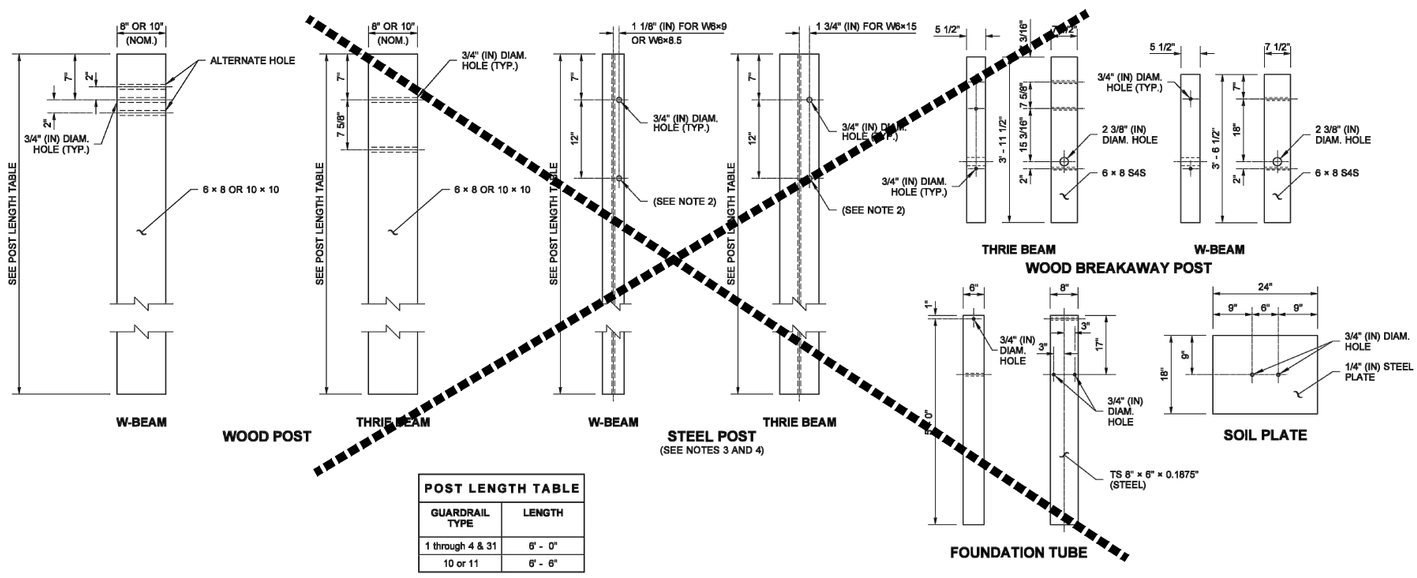

POST LENGTH TABLE	
GUARDRAIL TYPE	LENGTH
1 through 4 & 31	6' - 0"
10 or 11	6' - 6"

DRAWN BY: FERN LIDDELL

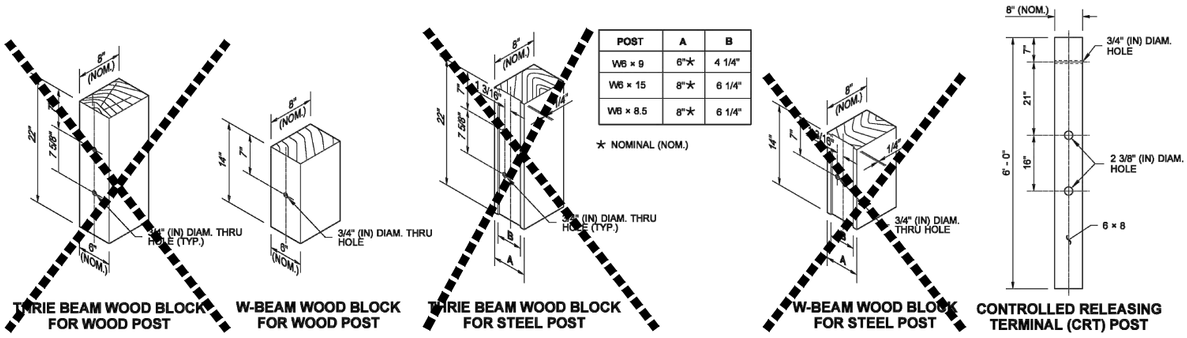

POST	A	B
W6 × 9	6"★	4 1/4"
W6 × 15	8"★	6 1/4"
W6 × 8.5	8"★	6 1/4"

★ NOMINAL (NOM.)

MODIFIED
BEAM GUARDRAIL POSTS AND BLOCKS
STANDARD PLAN C-1b
SHEET 2 OF 2 SHEETS

SHEET: RD-8	CITY OF SAMMAMISH	PRELIMINARY NOT FOR CONSTRUCTION	DATE: FEB 2016
OF: XX	KING COUNTY WASHINGTON		SCALE: NOTED
JOB NO.: 14630	212TH WAY SE IMPROVEMENTS		DRAWN: Y.B.P.
DWG: RDWY_DET	ROADWAY DETAILS		CHECKED: C.B.W.
		No. / REVISION / DATE / APPD	APPROVED: B.L.S.

BRIAN L. SOURTINE — STATE OF WASHINGTON — 36091 — REGISTERED PROFESSIONAL ENGINEER

CHI-HENG WANG — STATE OF WASHINGTON — 39930 — REGISTERED PROFESSIONAL ENGINEER

Gray & Osborne, Inc.
CONSULTING ENGINEERS
701 DEXTER AVENUE NORTH SUITE 200
SEATTLE, WASHINGTON 98109 • (206) 284-0860

DRAWN BY: FERN LIDDELL

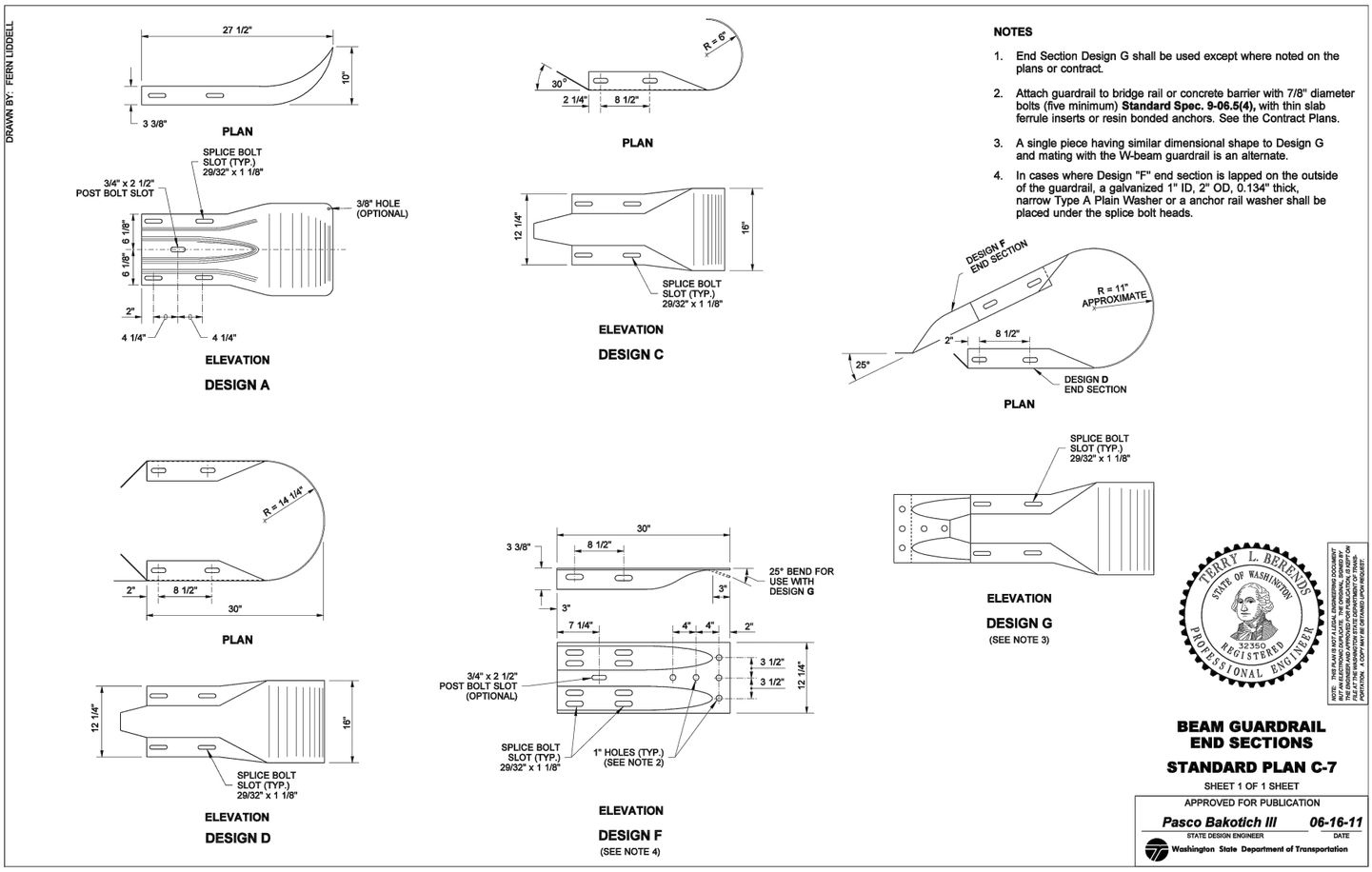

NOTES

1. End Section Design G shall be used except where noted on the plans or contract.
2. Attach guardrail to bridge rail or concrete barrier with 7/8" diameter bolts (five minimum) **Standard Spec. 9-06.5(4),** with thin slab ferrule inserts or resin bonded anchors. See the Contract Plans.
3. A single piece having similar dimensional shape to Design G and mating with the W-beam guardrail is an alternate.
4. In cases where Design "F" end section is lapped on the outside of the guardrail, a galvanized 1" ID, 2" OD, 0.134" thick, narrow Type A Plain Washer or a anchor rail washer shall be placed under the splice bolt heads.

TERRY L. BEREADS — STATE OF WASHINGTON — 32350 — REGISTERED PROFESSIONAL ENGINEER

NOTE: THIS PLAN IS NOT A LEGAL ENGINEERING DOCUMENT UNLESS AND UNTIL IT BEARS THE ENGINEER'S SEAL AND THE ENGINEER HAS APPROVED FOR PUBLICATION. IS KEPT ON FILE AT WASHINGTON STATE DEPARTMENT OF TRANSPORTATION. A COPY MAY BE OBTAINED UPON REQUEST.

BEAM GUARDRAIL END SECTIONS

STANDARD PLAN C-7

SHEET 1 OF 1 SHEET

APPROVED FOR PUBLICATION

Pasco Bakotich III — STATE DESIGN ENGINEER — *06-16-11* — DATE

Washington State Department of Transportation

DRAWN BY: FERN LIDDELL

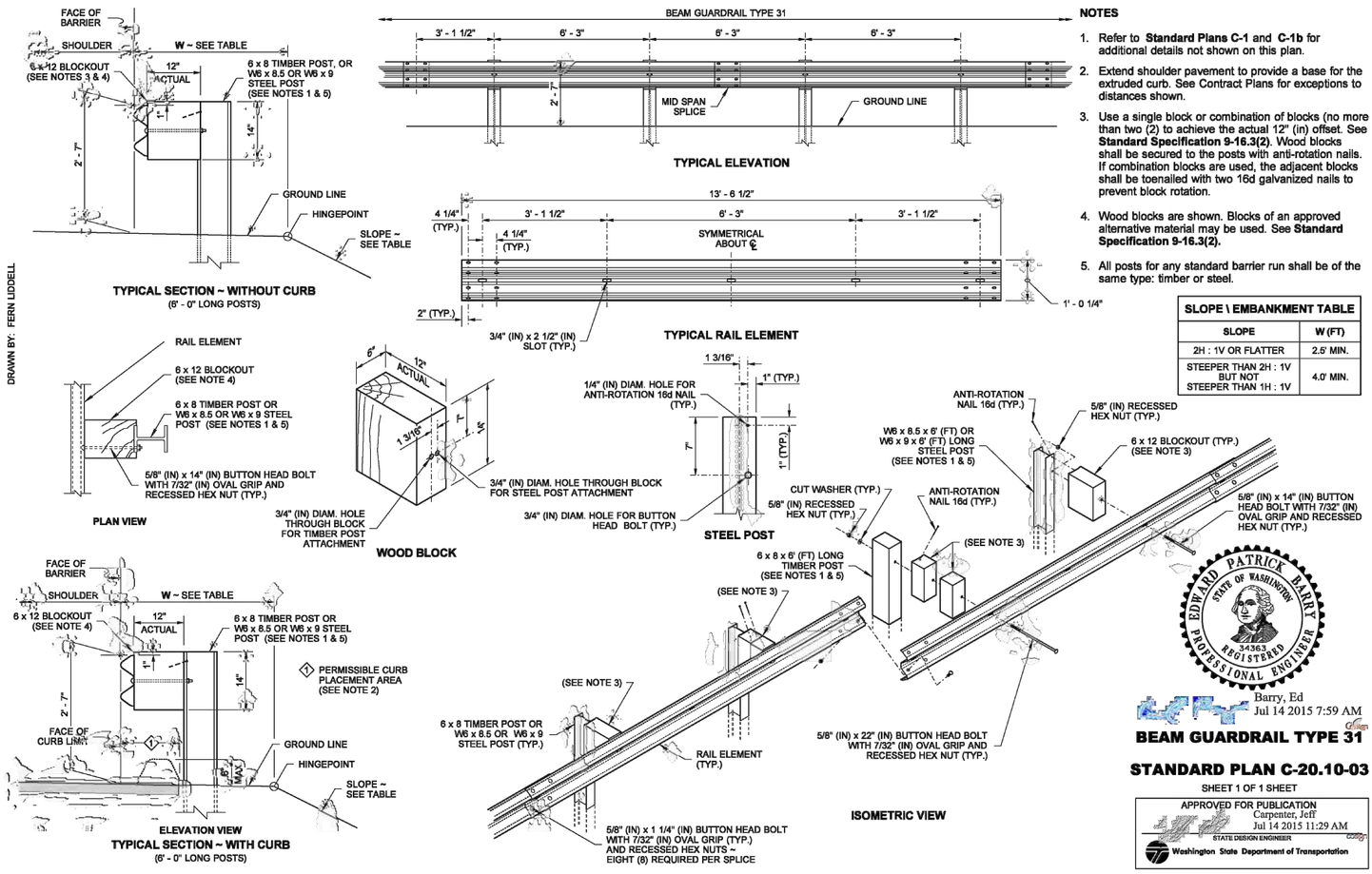

NOTES

1. Refer to **Standard Plans C-1** and **C-1b** for additional details not shown on this plan.
2. Extend shoulder pavement to provide a base for the extruded curb. See Contract Plans for exceptions to distances shown.
3. Use a single block or combination of blocks (no more than two (2) to achieve the actual 12" (in) offset. See **Standard Specification 9-16.3(2)**. Wood blocks shall be secured to the posts with anti-rotation nails. If combination blocks are used, the adjacent blocks shall be toenailed with two 16d galvanized nails to prevent block rotation.
4. Wood blocks are shown. Blocks of an approved alternative material may be used. See **Standard Specification 9-16.3(2).**
5. All posts for any standard barrier run shall be of the same type: timber or steel.

SLOPE \ EMBANKMENT TABLE	
SLOPE	W (FT)
2H : 1V OR FLATTER	2.5' MIN.
STEEPER THAN 2H : 1V BUT NOT STEEPER THAN 1H : 1V	4.0' MIN.

EDWARD PATRICK BARRY — STATE OF WASHINGTON — 34363 — REGISTERED PROFESSIONAL ENGINEER

Barry, Ed
Jul 14 2015 7:59 AM

BEAM GUARDRAIL TYPE 31

STANDARD PLAN C-20.10-03

SHEET 1 OF 1 SHEET

APPROVED FOR PUBLICATION
Carpenter, Jeff
Jul 14 2015 11:29 AM

STATE DESIGN ENGINEER — DATE

Washington State Department of Transportation

SHEET:	RD-9
OF:	XX
JOB NO.:	14630
DWG:	RDWY_DET

CITY OF SAMMAMISH

KING COUNTY WASHINGTON

212TH WAY SE IMPROVEMENTS

ROADWAY DETAILS

BRIAN L. SOURKINE — STATE OF WASHINGTON — 36091 — REGISTERED PROFESSIONAL ENGINEER

CHI-HENG WANG — STATE OF WASHINGTON — 39930 — REGISTERED PROFESSIONAL ENGINEER

PRELIMINARY NOT FOR CONSTRUCTION

No.	REVISION	DATE	APPD

DATE:	FEB 2016
SCALE:	NOTED
DRAWN:	Y.B.P.
CHECKED:	C.B.W.
APPROVED:	B.L.S.

Gray & Osborne, Inc.
CONSULTING ENGINEERS
701 DEXTER AVENUE NORTH SUITE 200
SEATTLE, WASHINGTON 98109 • (206) 284-0860

DRAWN BY: COLBY FLETCHER

NOTES

1. An SKT-MGS (TL-3) as manufactured by Road Systems, Inc. shall be installed according to the manufacturer's recommendations.
2. A reflectorized object marker shall be installed according to the manufacturer's recommendations.
3. When snow load post washers and snow load rail washers are required by the Contract, the snow load rail washers shall not be installed within the terminal limits.
4. Terminal shall be installed at a widening, ensuring the end piece is entirely off the shoulder. While this terminal does not require an offset at the end, a flare is recommended. A maximum flare rate of 25 : 1 or flatter over the length of the terminal is allowed for the SKT-MGS (TL-3).
5. This terminal is FHWA accepted at Test Level Three (TL-3) and may be used for all posted speeds.
6. For terminal details, see WSDOT approved manufacturer's drawings.

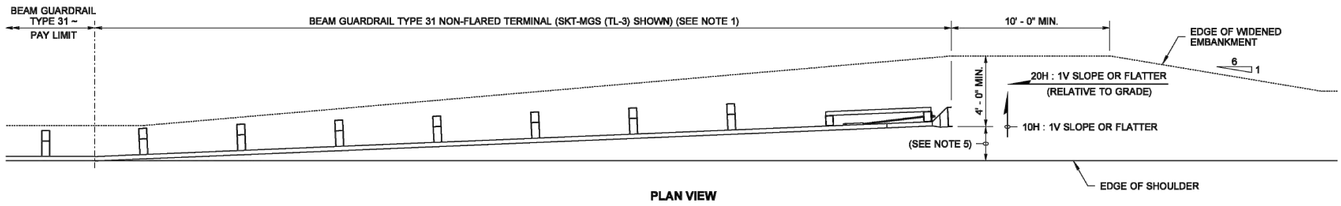

PLAN VIEW

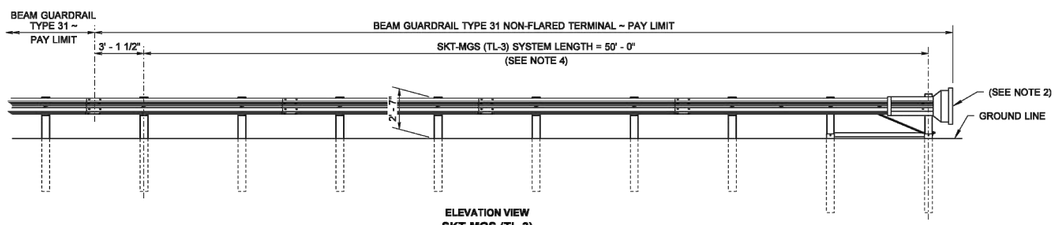

ELEVATION VIEW
SKT-MGS (TL-3)

EDWARD PATRICK BARRY
STATE OF WASHINGTON
34363
REGISTERED
PROFESSIONAL ENGINEER

Barry, Ed
Oct 23 2014 11:44 AM

BEAM GUARDRAIL TYPE 31 NON-FLARED TERMINAL WOOD POSTS (ALL POSTED SPEEDS) STANDARD PLAN C-22.41-01

SHEET 1 OF 1 SHEET

APPROVED FOR PUBLICATION
Bakotich, Panos
Oct 23 2014 12:10 PM
STATE DESIGN ENGINEER
Washington State Department of Transportation

DRAWN BY: LISA CYFORD

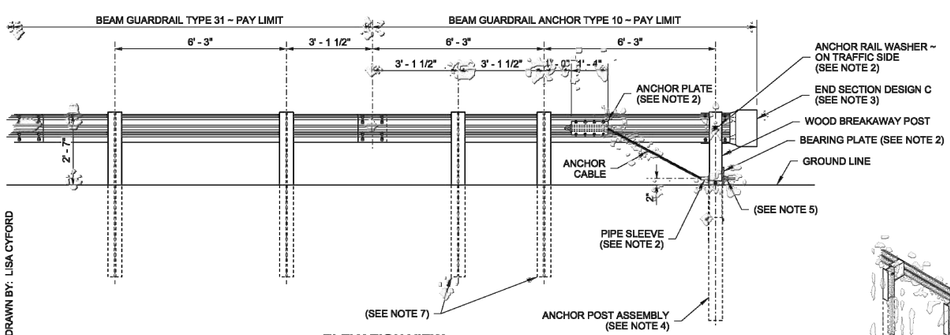

ELEVATION VIEW
W-BEAM

NOTES

1. For use on the end of guardrail runs when a crashworthy terminal is not required.
2. For additional details not shown, see **Standard Plan C-6c**.
3. For end section details, see **Standard Plans C-7** and **C-7a**.
4. Use details for Wood Breakaway post shown on this plan and components shown on **Standard Plan C-1b**.
5. Fasten the Anchor Cable using two 1" (in) nuts and washer, at both ends of cable. Outside nut shall be torqued against inside nut a minimum of 100 ft.-lbs.
6. Wood blocks shown. Blocks of alternate material may be used. See **Standard Specification 9-16.3(2)**.
7. Posts shall match those of the connecting run: timber or steel.

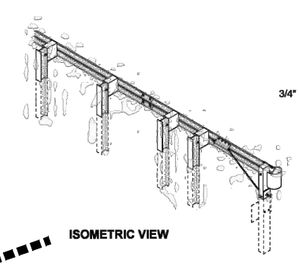

ISOMETRIC VIEW

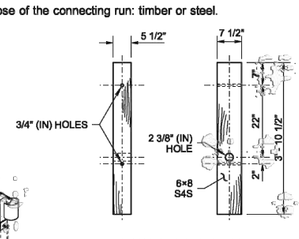

WOOD BREAKAWAY POST DETAIL

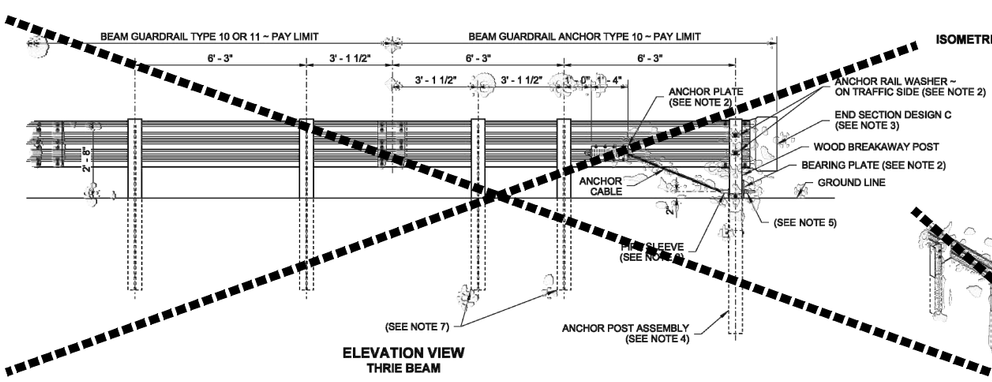

ELEVATION VIEW
THRIE BEAM

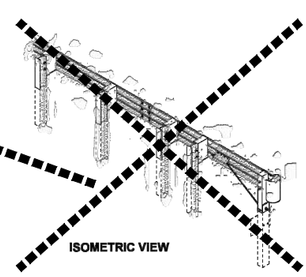

ISOMETRIC VIEW

MODIFIED

BEAM GUARDRAIL (TYPE 31) ANCHOR TYPE 10

STANDARD PLAN C-23.60-03

SHEET 1 OF 1 SHEET

SHEET: RD-10	OF: XX	JOB NO.: 14630	DWG: RDWY_DET

CITY OF SAMMAMISH

KING COUNTY WASHINGTON

212TH WAY SE IMPROVEMENTS

ROADWAY DETAILS

BRIAN L. SOURKINE — STATE OF WASHINGTON — 36091 — REGISTERED PROFESSIONAL ENGINEER

CHI-HENG WANG — STATE OF WASHINGTON — 39930 — REGISTERED PROFESSIONAL ENGINEER

PRELIMINARY NOT FOR CONSTRUCTION

No.	REVISION	DATE	APPD

DATE:	FEB 2016
SCALE:	NOTED
DRAWN:	Y.B.P.
CHECKED:	C.B.W.
APPROVED:	B.L.S.

Gray & Osborne, Inc.
CONSULTING ENGINEERS
701 DEXTER AVENUE NORTH SUITE 200
SEATTLE, WASHINGTON 98109 • (206) 284-0860

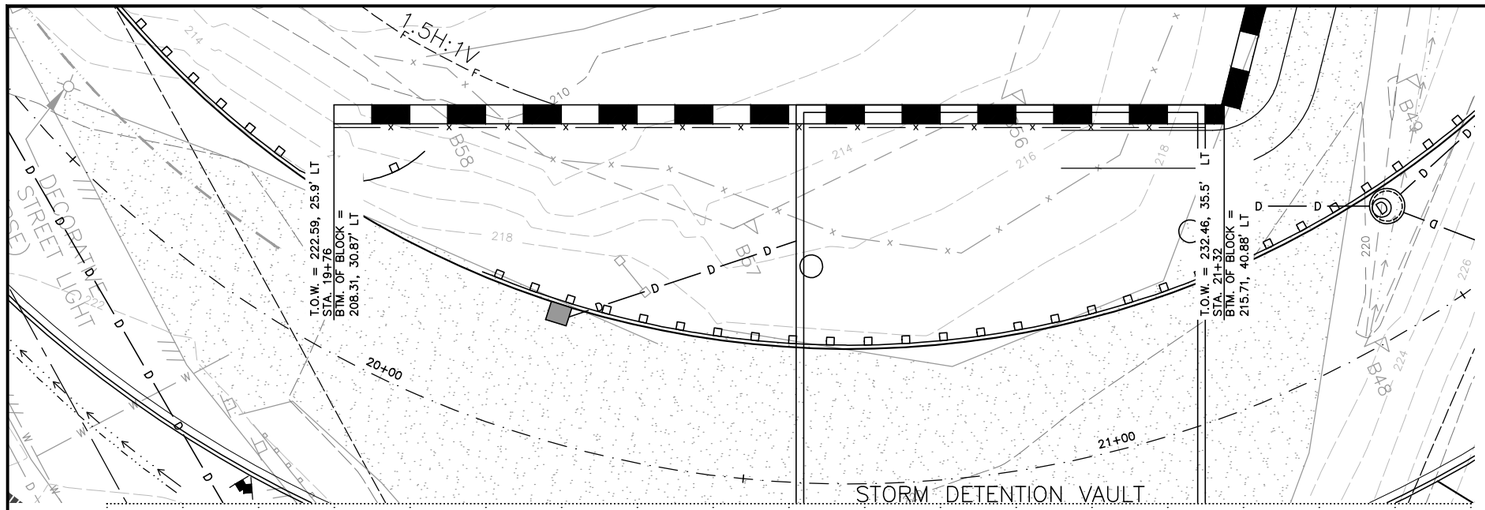

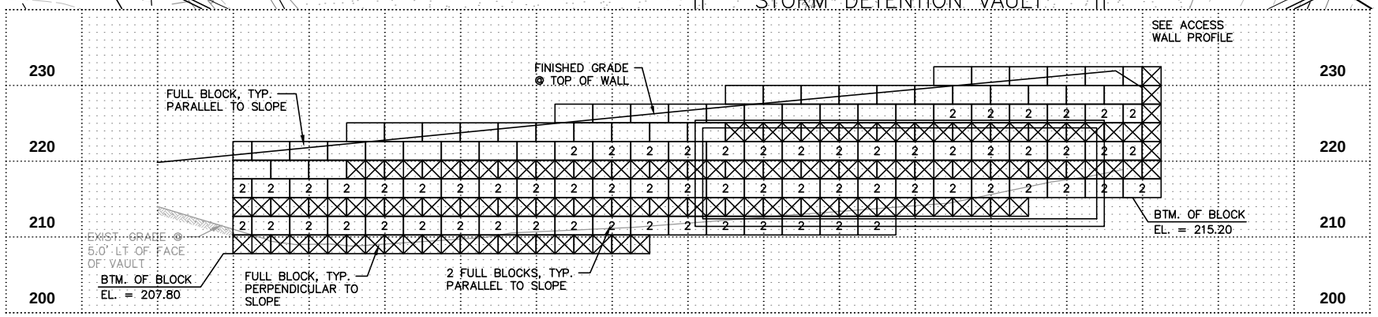

DETENTION VAULT WALL PROFILE - APPROX. STA. 19+76 TO APPROX. STA. 21+32, LEFT HORIZONTAL SCALE: 1"=10' VERTICAL SCALE: 1"=10'

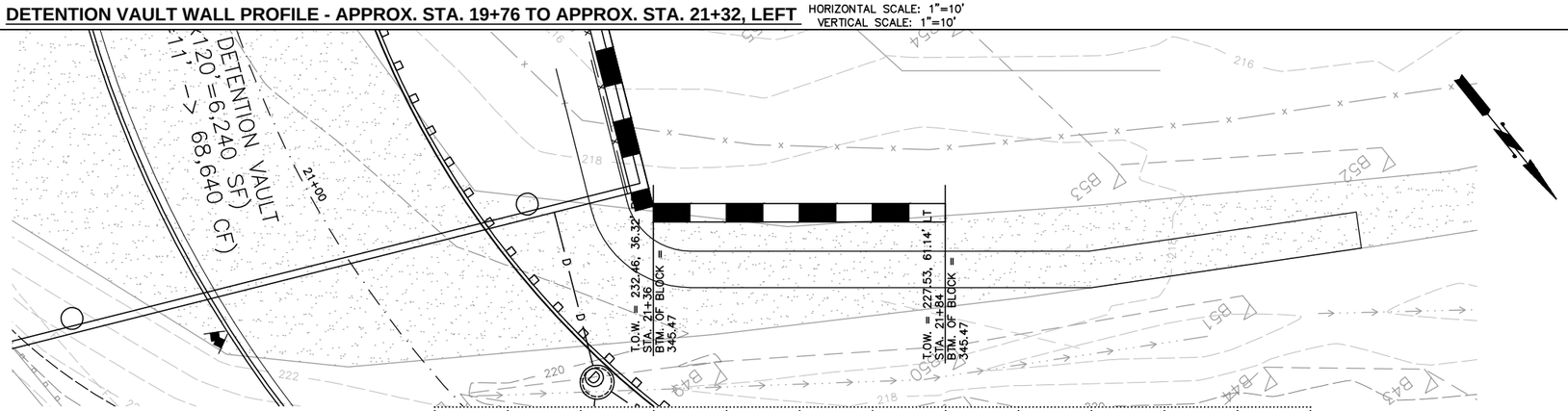

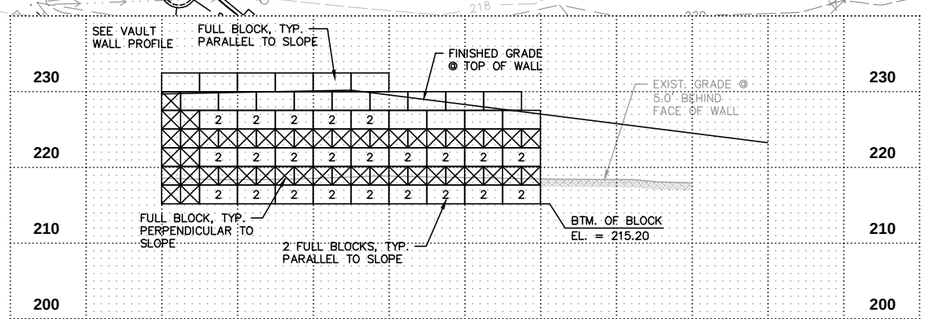

VAULT ACCESS WALL PROFILE - APPROX. STA. 21+36 TO APPROX. STA. 21+84, LEFT HORIZONTAL SCALE: 1"=10' VERTICAL SCALE: 1"=10'

10 5 0 10 20

NOTE:

WALL PROFILES ARE TYPICAL ONLY. CONTRACTOR SHALL VERIFY AND ADJUST BLOCK LAYOUT AS REQUIRED. CONTRACTOR SHALL COORDINATE WITH ENGINEER.

0 1" 2"
TWO INCHES AT FULL SCALE. IF NOT, SCALE ACCORDINGLY

Gray & Osborne, Inc.
CONSULTING ENGINEERS
701 DEXTER AVENUE NORTH, SUITE 200
SEATTLE, WASHINGTON 98109 • (206) 284-0860

DATE: FEB 2016
SCALE: H: 1"=10' V: 1"=10'
DRAWN: B.D.C.
CHECKED:
APPROVED:

No.	REVISION	DATE	APPD

PRELIMINARY NOT FOR CONSTRUCTION

CHI-HENG WANG — STATE OF WASHINGTON — 36929 — REGISTERED PROFESSIONAL ENGINEER

BRIAN L. SOURINE — STATE OF WASHINGTON — 30061 — REGISTERED PROFESSIONAL ENGINEER

CITY OF SAMMAMISH
KING COUNTY WASHINGTON
212TH WAY SE IMPROVEMENTS
RETAINING WALL DETAILS

SHEET: RW-1
OF: XX
JOB NO.: 14630
DWG: WALL

M:\SAMMAM\14630 212th Way FINAL DESIGN\01 Design\Planset\WALL.dwg, 2/19/2016 3:59 PM, ----

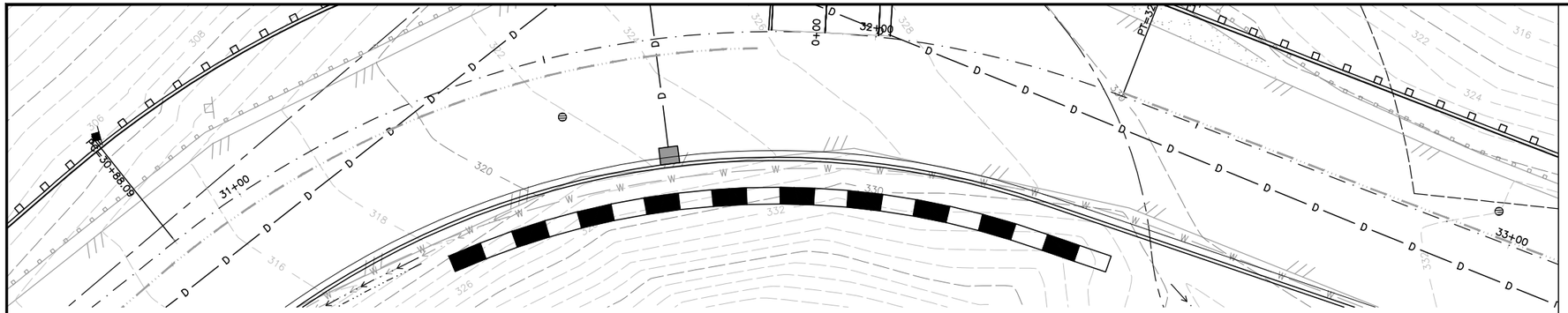

WALL PROFILE

HORIZONTAL SCALE: 1"=10'
VERTICAL SCALE: 1"=10'

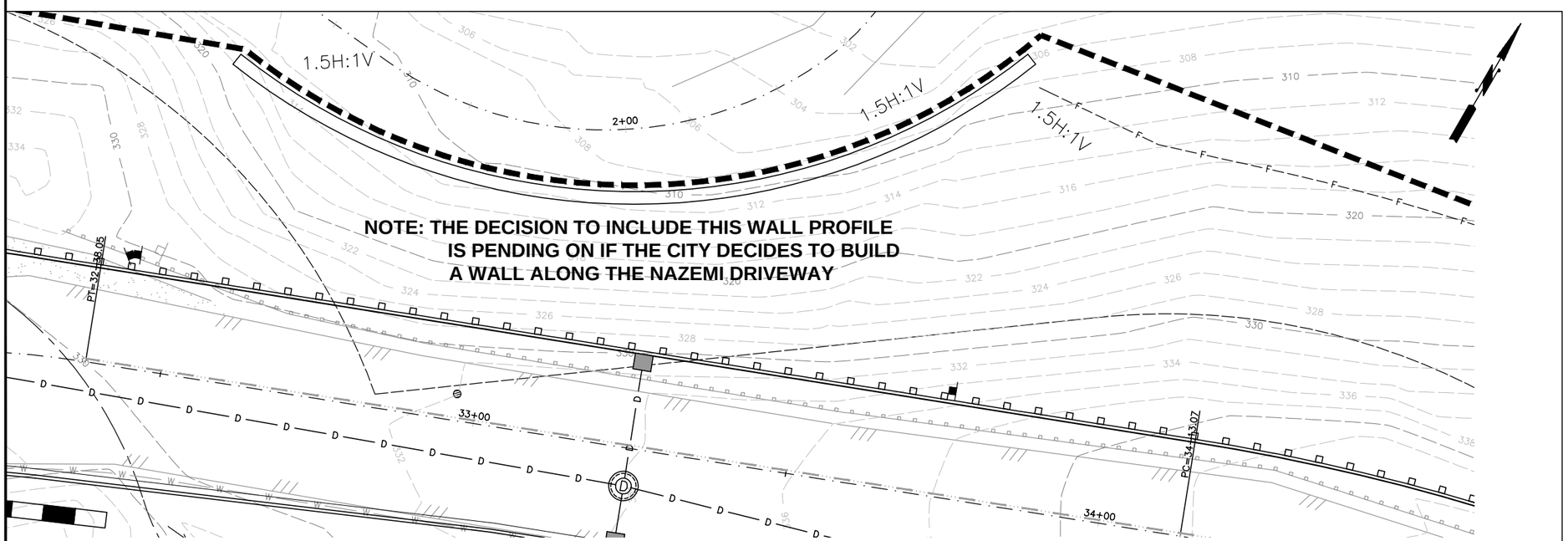

WALL PROFILE

HORIZONTAL SCALE: 1"=10'
VERTICAL SCALE: 1"=10'

10 5 0 10 20

NOTE:

WALL PROFILES ARE TYPICAL ONLY. CONTRACTOR SHALL VERIFY AND ADJUST BLOCK LAYOUT AS REQUIRED. CONTRACTOR SHALL COORDINATE WITH ENGINEER.

0 1" 2"
TWO INCHES AT FULL SCALE.
IF NOT, SCALE ACCORDINGLY

Gray & Osborne, Inc.
CONSULTING ENGINEERS
701 DEXTER AVENUE NORTH SUITE 200
SEATTLE, WASHINGTON 98109 • (206) 284-0860

DATE: FEB 2016
SCALE: H: 1"=10' V: 1"=10'
DRAWN: B.D.C.
CHECKED:
APPROVED:

PRELIMINARY
NOT FOR
CONSTRUCTION

No.	REVISION	DATE	APPD

CHI-HENG WANG
STATE OF WASHINGTON
40396
REGISTERED PROFESSIONAL ENGINEER

BRIAN L. SOURWINE
STATE OF WASHINGTON
46936
REGISTERED PROFESSIONAL ENGINEER

CITY OF SAMMAMISH
KING COUNTY WASHINGTON
212TH WAY SE IMPROVEMENTS
RETAINING WALL DETAILS

SHEET: **RW-2**
OF: **XX**
JOB NO.: 14630
DWG: WALL

M:\SAMMAM\14630 212th Way FINAL DESIGN\01 Design\Planset\WALL.dwg, 2/19/2016 4:01 PM, ----

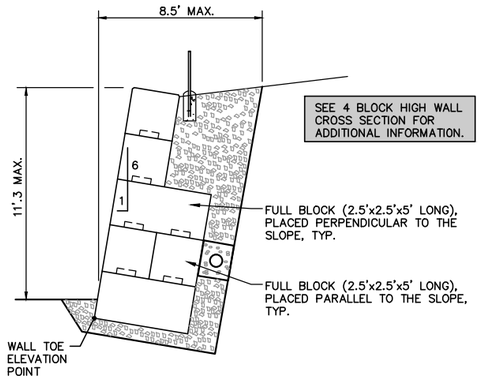

5 BLOCK HIGH WALL CROSS SECTION

NOT TO SCALE

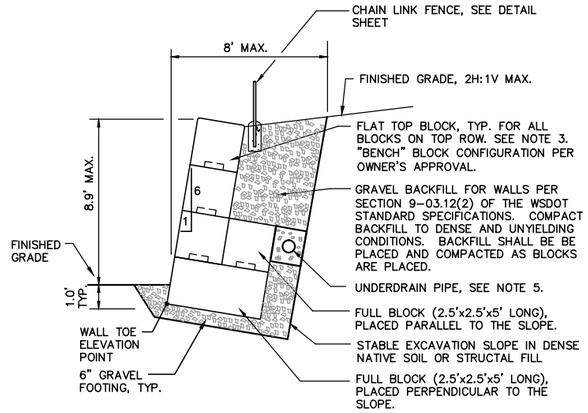

4 BLOCK HIGH WALL CROSS SECTION

NOT TO SCALE

NOTES:

1. ALL LOOSE SOIL AT FOUNDATION SHALL BE OVER EXCAVATED AND REPLACED WITH COMPACTED BACKFILL AS DESCRIBED ABOVE. THE EXCAVATION SHALL BE KEPT FREE OF WATER. THE PREPARED WALL FOUNDATION SHALL BE EVALUATED BY THE ENGINEER PRIOR TO PLACEMENT OF ANY BLOCKS.
2. FOR TALLER WALL, PLACE AN ADDITIONAL ROW OF BLOCK, PERPENDICULAR TO THE SLOPE AT THE BOTTOM OF THE WALL. DO NOT EXCEED 6 BLOCKS TALL.
3. ALL BLOCKS LOCATED ALONG THE TOP ROW SHALL BE FURNISHED WITH A FLAT TOP.
4. BLOCKS SHALL HAVE CUT STONE FACE AS MANUFACTURED BY ULTRABLOCK, OR OWNER APPROVED EQUAL.
5. 4" DIAMETER PERFORATED CPEP DRAIN PIPE. CONNECT TO NEW STORM SYSTEM OR DAYLIGHT TO FILL SLOPE (ABOVE PERMANENT WATER LEVEL) AS DIRECTED BY ENGINEER.

SEGMENTAL CONCRETE RETAINING WALL

NOT TO SCALE

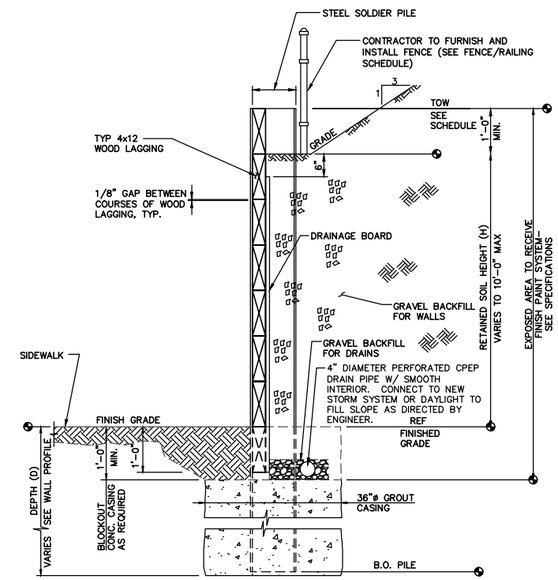

NOTES:

1. SET SOLDIER PILES IN PRE-DRILLED CONCRETE GROUT CASING. CHIP & REMOVE CONCRETE ENCASEMENT AS REQUIRED DURING PLACEMENT OF LAGGING.
2. LAGGING SHALL BE INSTALLED AS THE EXCAVATION PROCEEDS AND NO MORE THAN 4 FEET (MEASURED VERTICALLY) OF UNSUPPORTED EXCAVATION SHALL BE EXPOSED AT ONE TIME.
3. SOLDIER PILES: ASTM A992, Fy=50 KSI.
4. PILES SPACED AT 6'-0" ON CENTER UNLESS OTHERWISE NOTED ON THE PLANS.
5. SEE PLAN FOR PILE LOCATIONS.
6. PAINT SOLDIER PILES WITH ONE COAT OF INORGANIC ZINC PRIMER.

A
–

SOLDIER PILE (TIMBER LAGGING) RETAINING WALL DETAIL

SCALE: 3/4"=1'-0"

NOTE: THE DECISION TO INCLUDE THIS WALL DETAIL IS PENDING ON IF THE CITY DECIDES TO BUILD A WALL ALONG THE NAZEMI DRIVEWAY

Gray & Osborne, Inc.
CONSULTING ENGINEERS
701 DEXTER AVENUE NORTH SUITE 200
SEATTLE, WASHINGTON 98109 • (206) 284-0860

DATE: FEB 2016
SCALE: NOTED
DRAWN: B.D.C
CHECKED:
APPROVED:

PRELIMINARY NOT FOR CONSTRUCTION

No.	REVISION	DATE	APPD

CHI-HENG WANG — STATE OF WASHINGTON — 36996 — REGISTERED PROFESSIONAL ENGINEER

BRIAN L. SOURWINE — STATE OF WASHINGTON — 16936 — REGISTERED PROFESSIONAL ENGINEER

CITY OF SAMMAMISH
KING COUNTY WASHINGTON
212TH WAY SE IMPROVEMENTS
RETAINING WALL DETAILS

SHEET: RW-3
OF: XX

JOB NO.: 14630
DWG: RDWY_DET

M:\SAMMAM\14630 212th Way FINAL DESIGN\01 Design\Planset\RDWY_DET.dwg, 2/19/2016 4:02 PM, ----

DRAWN BY: LISA CYFORD

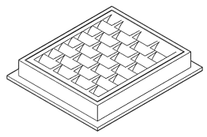

FRAME AND VANED GRATE

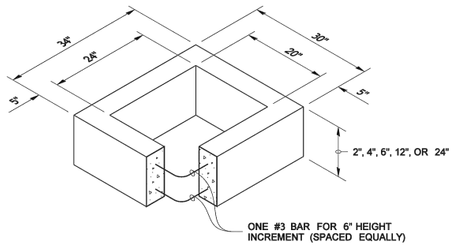

RECTANGULAR ADJUSTMENT SECTION

PIPE ALLOWANCES	
PIPE MATERIAL	MAXIMUM INSIDE DIAMETER
REINFORCED OR PLAIN CONCRETE	12"
ALL METAL PIPE	15"
CPSSP * (STD. SPEC. 9-05.20)	12"
SOLID WALL PVC (STD. SPEC. 9-05.12(1))	15"
PROFILE WALL PVC (STD. SPEC. 9-05.12(2))	15"

* CORRUGATED POLYETHYLENE STORM SEWER PIPE

NOTES

1. As acceptable alternatives to the rebar shown in the PRECAST BASE SECTION, fibers (placed according to the Standard Specifications), or wire mesh having a minimum area of 0.12 square inches per foot shall be used with the minimum required rebar shown in the ALTERNATIVE PRECAST BASE SECTION. Wire mesh shall not be placed in the knockouts.
2. The knockout diameter shall not be greater than 20". Knockouts shall have a wall thickness of 2" minimum to 2.5" maximum. Provide a 1.5" minimum gap between the knockout wall and the outside of the pipe. After the pipe is installed, fill the gap with joint mortar in accordance with Standard Specification 9-04.3.
3. The maximum depth from the finished grade to the lowest pipe invert shall be 5'.
4. The frame and grate may be installed with the flange down, or integrally cast into the adjustment section with flange up.
5. The Precast Base Section may have a rounded floor, and the walls may be sloped at a rate of 1:24 or steeper.
6. The opening shall be measured at the top of the Precast Base Section.
7. All pickup holes shall be grouted full after the basin has been placed.

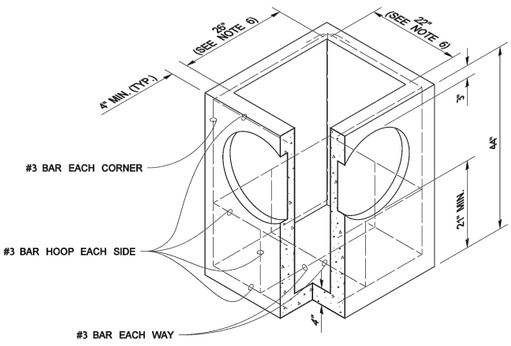

PRECAST BASE SECTION

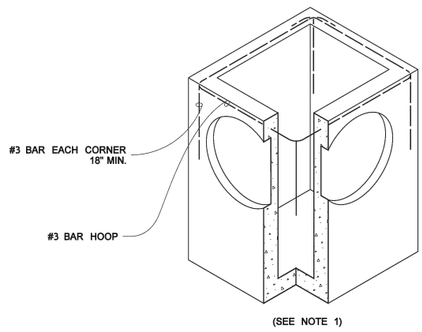

ALTERNATIVE PRECAST BASE SECTION

CASEY M. KRAMER STATE OF WASHINGTON 44535 REGISTERED PROFESSIONAL ENGINEER

NOTE: THIS PLAN IS NOT A LEGAL ENGINEERING DOCUMENT UNTIL IT IS SIGNED, STAMPED AND DATED BY A REGISTERED PROFESSIONAL ENGINEER AND APPROVED FOR PUBLICATION BY THE STATE DESIGN ENGINEER. IF THIS DOCUMENT IS NOT IN PUBLICATION FORMAT, A COPY MAY BE OBTAINED UPON REQUEST.

CATCH BASIN TYPE 1

STANDARD PLAN B-5.20-01

SHEET 1 OF 1 SHEET

APPROVED FOR PUBLICATION

Pasco Bakotich III 06-16-11

STATE DESIGN ENGINEER DATE

Washington State Department of Transportation

DRAWN BY: LISA CYFORD

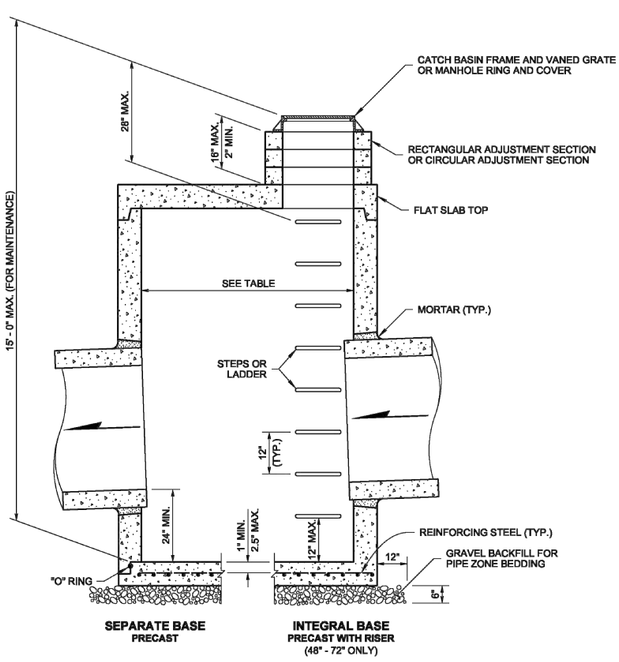

NOTES

1. No steps are required when height is 4' or less.
2. The bottom of the precast catch basin may be sloped to facilitate cleaning.
3. The rectangular frame and grate may be installed with the flange up or down. The frame may be cast into the adjustment section.
4. Knockouts shall have a wall thickness of 2" minimum to 2.5" maximum. Provide a 1.5" minimum gap between the knockout wall and the outside of the pipe. After the pipe is installed, fill the gap with joint mortar in accordance with **Standard Specification 9-04.3.**

CATCH BASIN DIMENSIONS				
CATCH BASIN DIAMETER	MIN. WALL THICKNESS	MIN. BASE THICKNESS	MAXIMUM KNOCKOUT SIZE	MINIMUM DISTANCE BETWEEN KNOCKOUTS
48"	4"	6"	36"	8"
54"	4.5"	8"	42"	8"
60"	5"	8"	48"	8"
72"	6"	8"	60"	12"
84"	8"	12"	72"	12"
96"	8"	12"	84"	12"
120"	10"	12"	96"	12"
144"	12"	12"	108"	12"

PIPE ALLOWANCES					
CATCH BASIN DIAMETER	PIPE MATERIAL WITH MAXIMUM INSIDE DIAMETER				
	CONCRETE	ALL METAL	CPSSP ①	SOLID WALL PVC ②	PROFILE WALL PVC ③
48"	24"	30"	24"	30"	30"
54"	30"	36"	30"	36"	36"
60"	36"	42"	36"	42"	42"
72"	42"	54"	42"	48"	48"
84"	54"	60"	54"	48"	48"
96"	60"	72"	60"	48"	48"
120"	66"	84"	60"	48"	48"
144"	78"	96"	60"	48"	48"

① Corrugated Polyethylene Storm Sewer Pipe **(Standard Specification 9-05.20)**
② **(Standard Specification 9-05.12(1))**
③ **(Standard Specification 9-05.12(2))**

CASEY M. KRAMER STATE OF WASHINGTON 44535 REGISTERED PROFESSIONAL ENGINEER

NOTE: THIS PLAN IS NOT A LEGAL ENGINEERING DOCUMENT UNTIL IT IS SIGNED, STAMPED AND DATED BY A REGISTERED PROFESSIONAL ENGINEER AND APPROVED FOR PUBLICATION BY THE STATE DESIGN ENGINEER. IF THIS DOCUMENT IS NOT IN PUBLICATION FORMAT, A COPY MAY BE OBTAINED UPON REQUEST.

CATCH BASIN TYPE 2

STANDARD PLAN B-10.20-01

SHEET 1 OF 1 SHEET

APPROVED FOR PUBLICATION

Pasco Bakotich III *02-07-12*

STATE DESIGN ENGINEER DATE

Washington State Department of Transportation

0 1" 2"
TWO INCHES AT FULL SCALE. IF NOT, SCALE ACCORDINGLY

SHEET: SD-1
OF: XX
JOB NO.: 14630
DWG: STRM_DET

CITY OF SAMMAMISH
KING COUNTY WASHINGTON
212TH WAY SE IMPROVEMENTS
STORM DRAINAGE DETAILS

BRIAN L. SOURKINE STATE OF WASHINGTON 36091 REGISTERED PROFESSIONAL ENGINEER

CHI-HENG WANG STATE OF WASHINGTON 39930 REGISTERED PROFESSIONAL ENGINEER

PRELIMINARY NOT FOR CONSTRUCTION

No.	REVISION	DATE	APPD

DATE: FEB 2016
SCALE: NOTED
DRAWN: B.D.C.
CHECKED:
APPROVED:

Gray & Osborne, Inc.
CONSULTING ENGINEERS
701 DEXTER AVENUE NORTH SUITE 200
SEATTLE, WASHINGTON 98109 • (206) 284-0860

DRAWN BY: LISA CYFORD

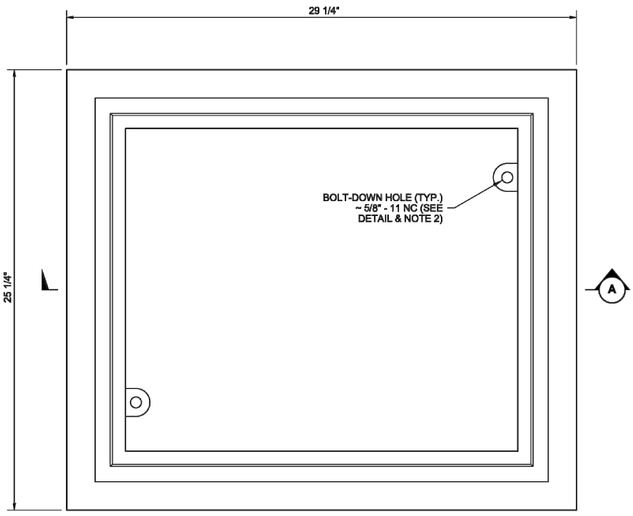

TOP

NOTES

1. This frame is designed to accommodate 20" × 24" grates or covers as shown on Standard Plans **B-30.20, B-30.30, B-30.40,** and **B-30.50**.
2. Bolt-down capability is required on all frames, grates, and covers, unless specified otherwise in the Contract. Provide 2 holes in the frame that are vertically aligned with the grate or cover slots. The frame shall accept the 5/8" - 11 NC × 2" Allen head cap screw by being tapped, or other approved mechanism. Location of bolt-down holes varies by manufacturer.
3. Refer to **Standard Specification 9-05.15(2)** for additional requirements.

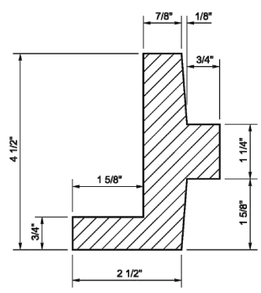

DETAIL B

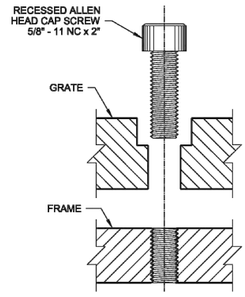

SECTION

BOLT-DOWN DETAIL
SEE NOTE 2

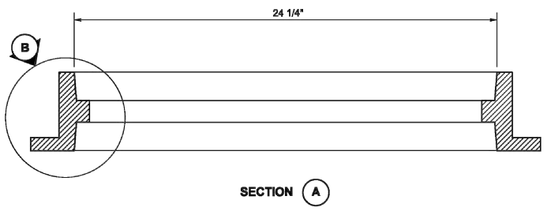

SECTION A

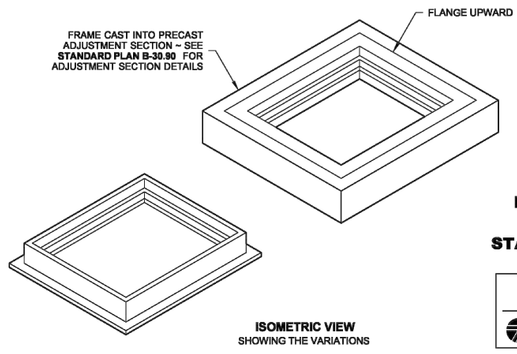

ISOMETRIC VIEW
SHOWING THE VARIATIONS

CASEY M. KRAMER
STATE OF WASHINGTON
44535
REGISTERED
PROFESSIONAL ENGINEER

NOTE: THIS PLAN IS NOT A LEGAL ENGINEERING DOCUMENT UNTIL IT HAS BEEN SIGNED, SEALED AND DATED BY THE ENGINEER AND APPROVED FOR PUBLICATION. IS NOT FOR CONSTRUCTION UNTIL THE PLAN IS SIGNED, SEALED AND DATED FOR CONSTRUCTION. A COPY MAY BE OBTAINED UPON REQUEST.

RECTANGULAR FRAME (REVERSIBLE)

STANDARD PLAN B-30.10-01

SHEET 1 OF 1 SHEET

APPROVED FOR PUBLICATION
Pasco Bakotich III *04/26/12*
STATE DESIGN ENGINEER DATE
Washington State Department of Transportation

DRAWN BY: LISA CYFORD

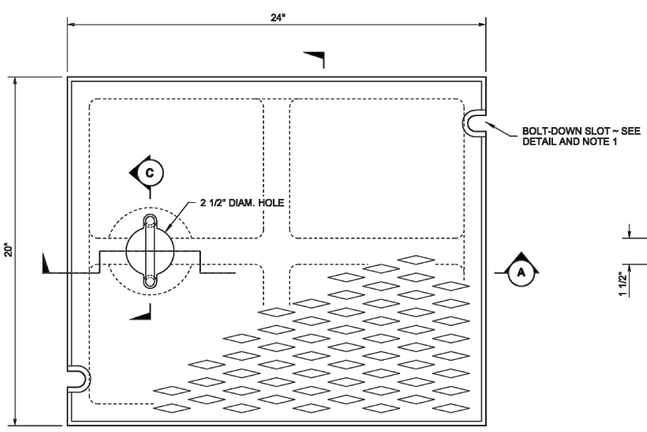

TOP

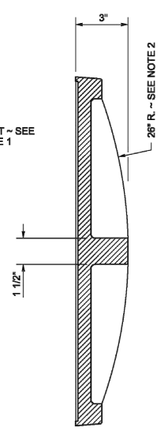

SECTION B

NOTES

1. Bolt-down capability is required on all frames, grates, and covers, unless specified otherwise in the Contract. Provide 2 holes in the frame that are vertically aligned with the grate or cover slots. The frame shall accept the 5/8" - 11 NC × 2" Allen head cap screw by being tapped, or other approved mechanism. Location of bolt-down holes varies by manufacturer.
2. Alternative reinforcing designs are acceptable in lieu of the rib design.
3. Refer to **Standard Specification 9-05.15(2)** for additional requirements.
4. For frame details, see **Standard Plan B-30.10.**

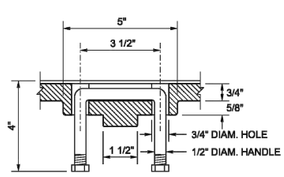

SECTION C

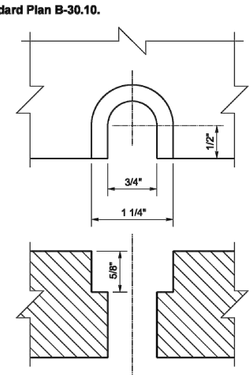

BOLT-DOWN SLOT DETAIL
SEE NOTE 1

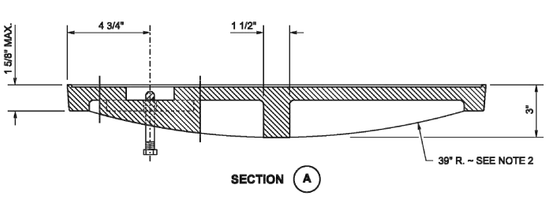

SECTION A

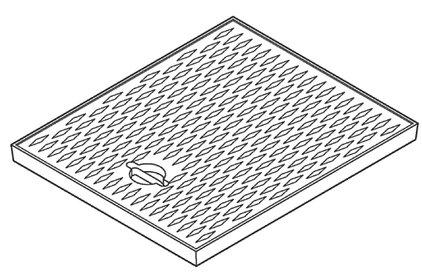

ISOMETRIC

CASEY M. KRAMER
STATE OF WASHINGTON
44535
REGISTERED
PROFESSIONAL ENGINEER

NOTE: THIS PLAN IS NOT A LEGAL ENGINEERING DOCUMENT UNTIL IT HAS BEEN SIGNED, SEALED AND DATED BY THE ENGINEER AND APPROVED FOR PUBLICATION. IS NOT FOR CONSTRUCTION UNTIL THE PLAN IS SIGNED, SEALED AND DATED FOR CONSTRUCTION. A COPY MAY BE OBTAINED UPON REQUEST.

RECTANGULAR SOLID METAL COVER

STANDARD PLAN B-30.20-02

SHEET 1 OF 1 SHEET

APPROVED FOR PUBLICATION
Pasco Bakotich III *04/26/12*
STATE DESIGN ENGINEER DATE
Washington State Department of Transportation

0 1" 2"
TWO INCHES AT FULL SCALE.
IF NOT, SCALE ACCORDINGLY.

SHEET: SD-2
OF: XX
JOB NO.: 14630
DWG: STRM_DET

CITY OF SAMMAMISH

KING COUNTY WASHINGTON

212TH WAY SE IMPROVEMENTS

STORM DRAINAGE DETAILS

BRIAN L. SOUKTINE
STATE OF WASHINGTON
36091
REGISTERED
PROFESSIONAL ENGINEER

CHI-HENG WANG
STATE OF WASHINGTON
39930
REGISTERED
PROFESSIONAL ENGINEER

PRELIMINARY NOT FOR CONSTRUCTION

No.	REVISION	DATE	APPD

DATE: FEB 2016
SCALE: NOTED
DRAWN: B.D.C
CHECKED:
APPROVED:

Gray & Osborne, Inc.
CONSULTING ENGINEERS
701 DEXTER AVENUE NORTH SUITE 200
SEATTLE, WASHINGTON 98109 • (206) 284-0860

File: M:\YELM\12416 Wasman Final Design\PLANSET\WSDOT Details\b.30.30-01_s.pdf
Silently for invalid reference

DRAWN BY: LISA CYFORD

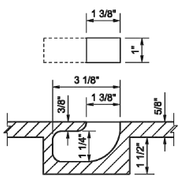

BLIND PICK NOTCH
DETAIL "A"

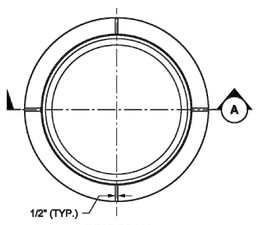

RING PLAN

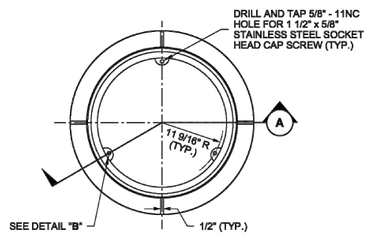

RING PLAN

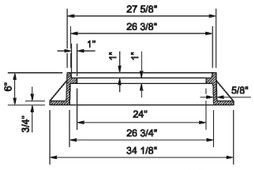

RING SECTION (A)

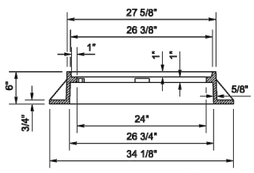

RING SECTION (A)

NOTES

1. The gasket and groove may be in the seat (frame) or in the underside of the cover. The gasket may be "T" shaped in section. The groove may be cast or machined.
2. Bolt-down capability is required on all frames, grates, and covers, unless specified otherwise in the Contract. Provide 3 holes in the frame that are vertically aligned with the grate or cover slots. The frame shall accept the 5/8" - 1 NC × 2" Allen head cap screw by being tapped, or other approved mechanism. Location of bolt down holes varies by manufacturer.
3. For bolt-down manhole ring and covers that are not designated "Watertight," the neoprene gasket, groove, and washer are not required.
4. Washer shall be neoprene (Detail "B").
5. In lieu of blind pick notch for manhole covers, a single 1" pick hole is acceptable. Hole location and number of holes may vary by manufacturer.
6. Alternative reinforcing designs are acceptable in lieu of the rib design.
7. For clarity, the vertical scale of the Cover Section has been exaggerated, it is 1.5 times the horizontal scale (1H:1.5V).

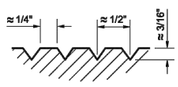

SKID GROOVE PATTERN DETAIL

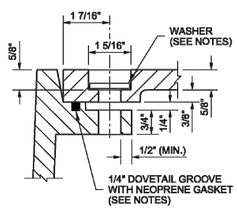

BOLT-DOWN / WATERTIGHT
DETAIL "B"

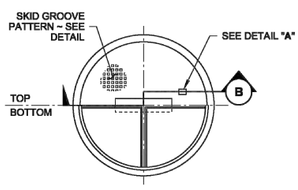

COVER PLAN

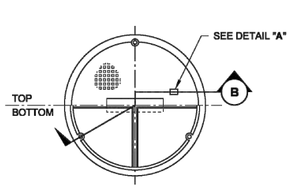

COVER PLAN

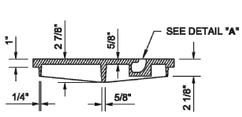

COVER SECTION (B)
(SEE NOTE 7)
STANDARD
TYPE 1

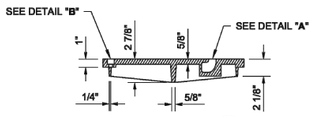

COVER SECTION (B)
(SEE NOTE 7)
BOLT-DOWN / WATERTIGHT
TYPE 2

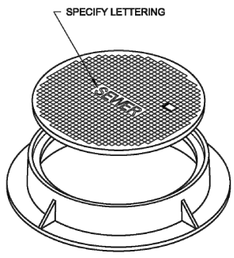

ISOMETRIC VIEW

NOTE: THIS PLAN IS NOT A LEGAL ENGINEERING DOCUMENT UNLESS IT BEARS THE ORIGINAL WET SEAL AND SIGNATURE OF THE ENGINEER AND APPROVED FOR PUBLICATION. IS NOT VALID IF ALTERED OR MODIFIED IN ANY MANNER. IF ONLY A PORTION IS PRESENTED, A COPY MAY BE OBTAINED UPON REQUEST.

CIRCULAR FRAME (RING) AND COVER

STANDARD PLAN B-30.70-03

SHEET 1 OF 1 SHEET

APPROVED FOR PUBLICATION

Pasco Bakotich III — STATE DESIGN ENGINEER — *04/26/12* — DATE

Washington State Department of Transportation

0 — 1" — 2"
TWO INCHES AT FULL SCALE
IF NOT, SCALE ACCORDINGLY

SHEET: SD-3
OF: XX
JOB NO.: 14630
DWG: STRM_DET

CITY OF SAMMAMISH

KING COUNTY WASHINGTON

212TH WAY SE IMPROVEMENTS

STORM DRAINAGE DETAILS

PRELIMINARY NOT FOR CONSTRUCTION

No.	REVISION	DATE	APPD

DATE: FEB 2016
SCALE: NOTED
DRAWN: B.D.C.
CHECKED:
APPROVED:

Gray & Osborne, Inc.
CONSULTING ENGINEERS
701 DEXTER AVENUE NORTH SUITE 200
SEATTLE, WASHINGTON 98109 • (206) 284-0860

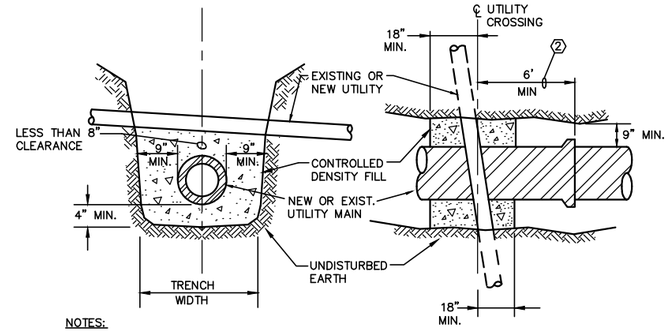

NOTES:

1. CONTRACTOR SHALL PROVIDE CONTROLLED DENSITY FILL PIPE ENCASEMENT AT ALL EXISTING UTILITY CROSSINGS IN THE EVENT THAT AN 8" SEPARATION CANNOT BE PROVIDED. THE CONTRACTOR SHALL FAMILIARIZE THEMSELVES WITH THE SITE UTILITIES TO ANTICIPATE PROVIDING AND INSTALLING CONCRETE ENCASEMENTS WHERE NECESSARY.
2. CONTRACTOR SHALL NOT CONSTRUCT ANY NEW PIPE JOINT WITHIN 6 FEET OF THE EXISTING CENTERLINE OF THE UTILITY CROSSING.

CONTROLLED DENSITY FILL PIPE ENCASEMENT DETAIL

NOT TO SCALE

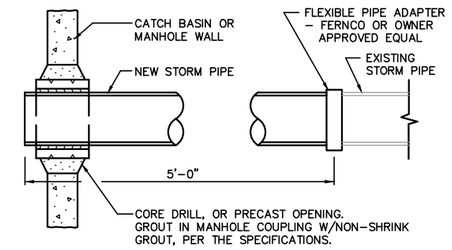

CONNECTION OF EXISTING STORM DRAIN USING FLEXIBLE PIPE ADAPTER

NOT TO SCALE

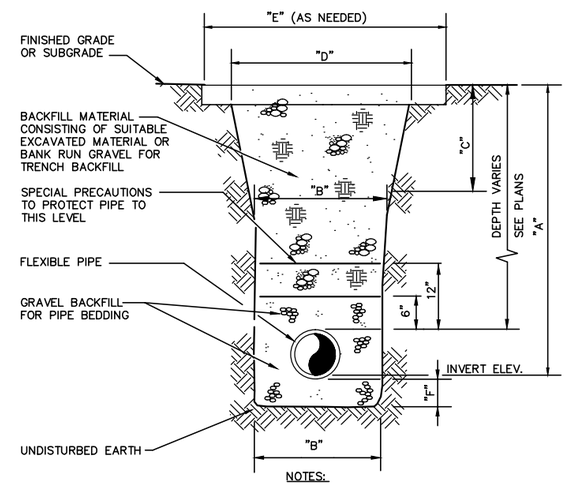

NOTES:

1. THE TRENCH SECTIONS SHOWN ON THE PLANS ARE FOR THE PAYMENT LIMITS FOR BANK RUN GRAVEL FOR TRENCH BACKFILL. PAYMENT FOR ALL BANK RUN GRAVEL FOR TRENCH BACKFILL SHALL BE COMPUTED FROM THE MEASUREMENT OF THE CONSTRUCTED TRENCH SECTION, TO THE MAXIMUM LIMITS AS INDICATED IN THE TABLES.
2. WHERE A "NEW ROADWAY SECTION" OR PAVEMENT REPAIR IS PROPOSED, THE TRENCH SECTION PAYMENT LIMIT LINE WILL BE BOUNDED AT THE TOP BY PAVEMENT SUBGRADE, PER TYPICAL ROADWAY SECTION DETAILS.

TRENCH SECTION - FLEXIBLE PIPE

NOT TO SCALE

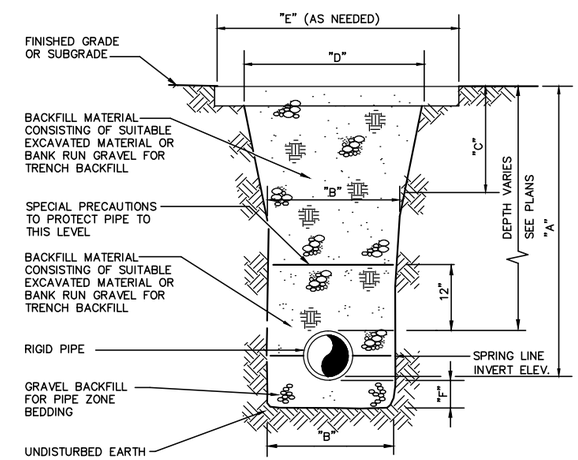

TRENCH SECTION - RIGID STORM PIPE

NOT TO SCALE

12" DIAMETER PIPE

A	6' OR LESS	8'	10'	12'	14'	16'	18'	20'	22'	24'	26'	28'
B	3.00'											
C	1.50'	1.50'	1.75'	2.25'	2.75'	3.25'	3.75'	4.25'	4.75'	5.25'	5.75'	6.25'
D	6.00'	6.00'	6.50'	7.50'	8.50'	9.50'	10.50'	11.50'	12.50'	13.50'	14.50'	15.50'
E	7.00'	7.00'	7.50'	8.50'	9.50'	10.50'	11.50'	12.50'	13.50'	14.50'	15.50'	16.50'
F	4 in											

TYPICAL TRENCH EXCAVATION LIMITS STORM SEWER PIPE

0 1" 2"

TWO INCHES AT FULL SCALE. IF NOT, SCALE ACCORDINGLY

Gray & Osborne, Inc.
CONSULTING ENGINEERS
701 DEXTER AVENUE NORTH SUITE 200
SEATTLE, WASHINGTON 98109 • (206) 284-0860

DATE: FEB 2016
SCALE: NOTED
DRAWN: B.D.C.
CHECKED:
APPROVED:

No.	REVISION	DATE	APPD

PRELIMINARY NOT FOR CONSTRUCTION

CHI-HENG WANG — STATE OF WASHINGTON — 39630 — REGISTERED PROFESSIONAL ENGINEER

BRIAN L. SOUBMINE — STATE OF WASHINGTON — 36091 — REGISTERED PROFESSIONAL ENGINEER

CITY OF SAMMAMISH
KING COUNTY WASHINGTON
212TH WAY SE IMPROVEMENTS
STORM DRAINAGE DETAILS

SHEET: SD-4
OF: XX

JOB NO.: 14630
DWG: STRM_DET

M:\SAMMAM\14630 212th Way FINAL DESIGN\01 Design\Planset\STRM_DET.dwg, 2/19/2016 4:07 PM, ----

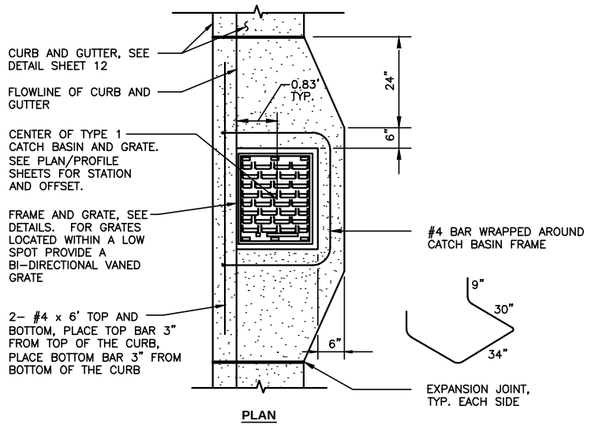

PLAN

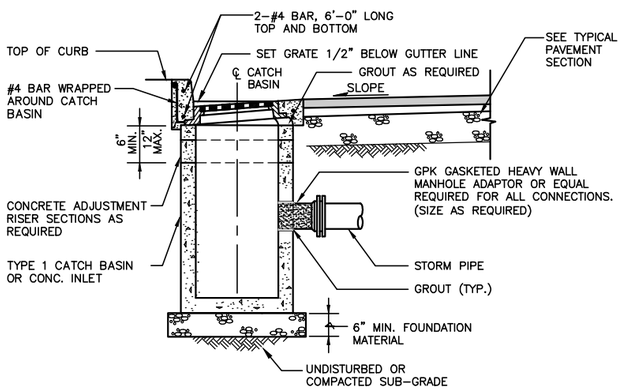

ELEVATION

TYPE 1 CATCH BASIN INSTALLATION DETAIL (WITH CURB AND GUTTER)

NOT TO SCALE

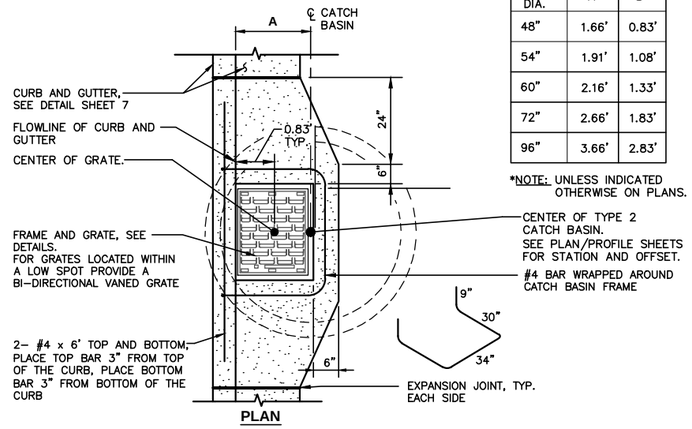

PLAN

TYPE 2 DIA.	A*	B*
48"	1.66'	0.83'
54"	1.91'	1.08'
60"	2.16'	1.33'
72"	2.66'	1.83'
96"	3.66'	2.83'

*NOTE: UNLESS INDICATED OTHERWISE ON PLANS.

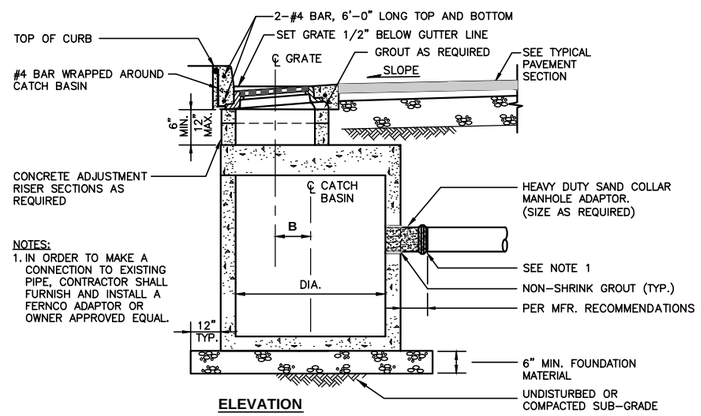

NOTES:
1. IN ORDER TO MAKE A CONNECTION TO EXISTING PIPE, CONTRACTOR SHALL FURNISH AND INSTALL A FERNCO ADAPTOR OR OWNER APPROVED EQUAL.

ELEVATION

TYPE 2 CATCH BASIN INSTALLATION DETAIL W/ CURB AND GUTTER

NOT TO SCALE

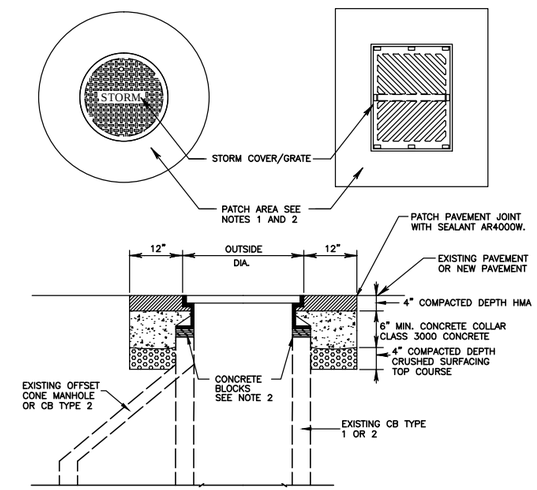

SECTION A-A

NOTES:

1. REMOVE PAVEMENT AND BASE MATERIALS FOR A DISTANCE WHICH IS EQUAL TO THE DIAMETER OF THE FRAME PLUS TWO FEET. ADJUST CASTING FRAME TO NEW PAVEMENT SURFACE USING CONCRETE BLOCKS & CONCRETE GROUT.
2. 2"x4"x8" SOLID BRICK USED FOR FINAL ADJUSTMENT TO GRADE. 6" HIGH MAX.

MANHOLE-FRAME AND COVER ADJUSTMENT DETAIL

NOT TO SCALE

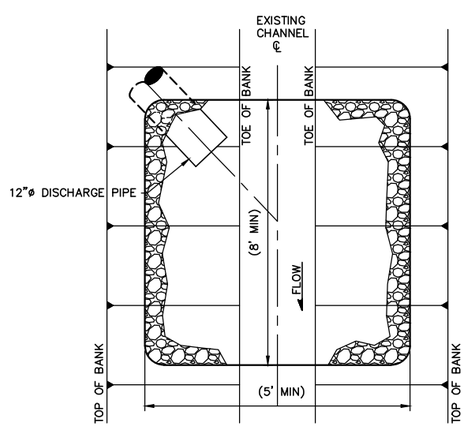

PLAN

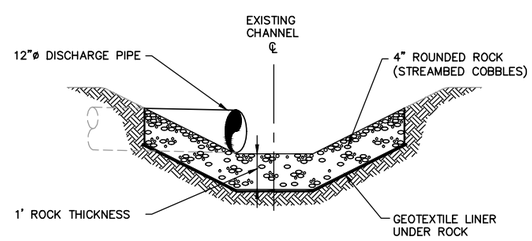

SECTION

ROUNDED ROCK DISSIPATION PAD

NOT TO SCALE

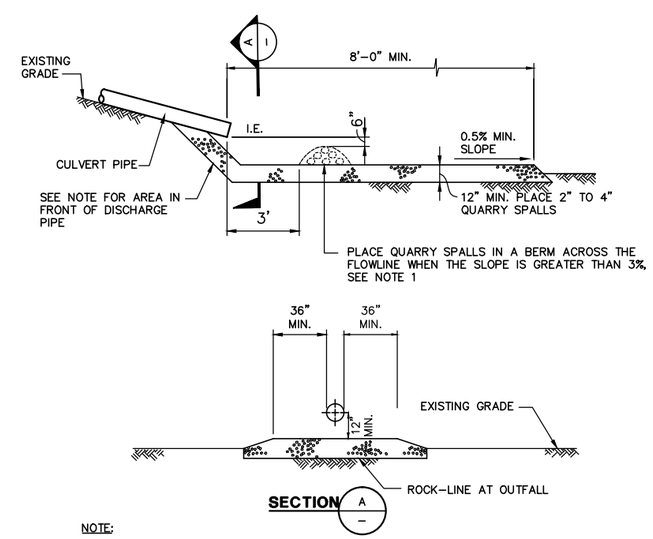

SECTION A/A

NOTE:

1. PLACE QUARRY SPALLS IN FRONT OF CULVERT DISCHARGE, ENGINEER SHALL SIZE QUARRY SPALL BERM.

RIPRAP AND DISSIPATION PAD

NOT TO SCALE

0 1" 2"
TWO INCHES AT FULL SCALE. IF NOT, SCALE ACCORDINGLY

Gray & Osborne, Inc.
CONSULTING ENGINEERS
701 DEXTER AVENUE NORTH SUITE 200
SEATTLE, WASHINGTON 98109 • (206) 284-0860

DATE: FEB 2016
SCALE: NOTED
DRAWN: B.D.C
CHECKED:
APPROVED:

No.	REVISION	DATE	APPD

PRELIMINARY NOT FOR CONSTRUCTION

CHI-FENG WANG — STATE OF WASHINGTON — 39930 — REGISTERED PROFESSIONAL ENGINEER

BRIAN L. SOURMINE — STATE OF WASHINGTON — 36091 — REGISTERED PROFESSIONAL ENGINEER

CITY OF SAMMAMISH
KING COUNTY WASHINGTON
212TH WAY SE IMPROVEMENTS
STORM DRAINAGE DETAILS

SHEET: SD-5
OF: XX
JOB NO.: 14630
DWG: STRM_DET

M:\SAMMAM\14630 212th Way FINAL DESIGN\01 Design\Planset\STRM_DET.dwg, 2/19/2016 4:07 PM, ----

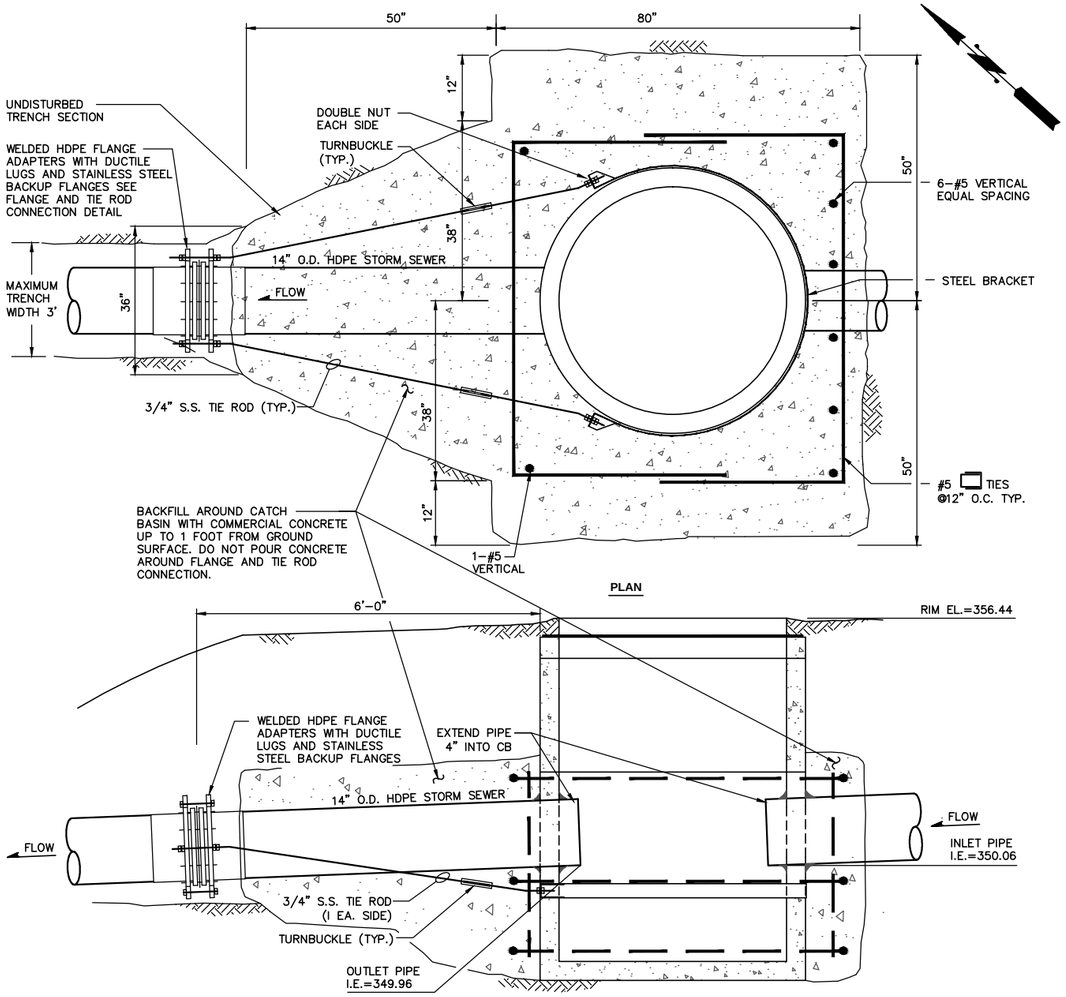

NOTES:

1. GROUT PIPE CONNECTION INSIDE AND OUT.

CATCH BASIN TYPE 2, 48" DIA. - CB NO. 36A
STA. 37+01, 13' LT

NOT TO SCALE

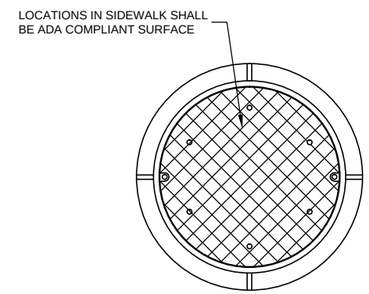

FRAME AND COVER

NOT TO SCALE

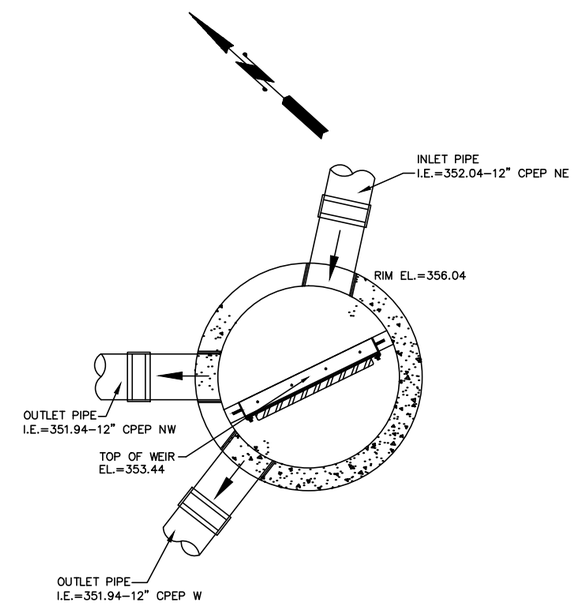

CATCH BASIN TYPE 2, 48" DIA. - CB NO. 36
WITH ADJUSTABLE WEIR
STA. 37+00, 22' RT

NOT TO SCALE

NOTES:

1. DO NOT EXCEED 5.0 FT-LBS TORQUE WHEN TIGHTENING SCREWS ON WEIR FRAME.
2. SEAL WEIR TO FRAME WITH SILICONE SEALANT AFTER FINAL ADJUSTMENT.

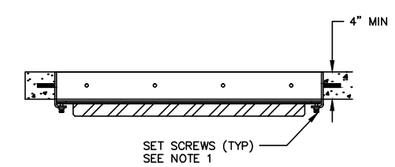

WEIR DETAIL - PLAN VIEW

NOT TO SCALE

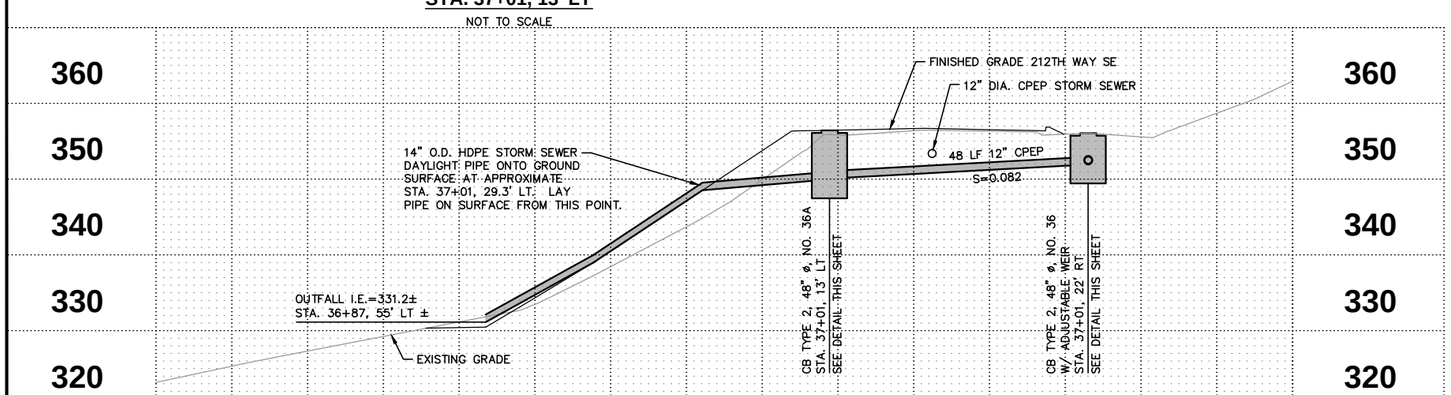

OUTFALL FROM CB NO. 36A

SCALE: 1"=10'-0"

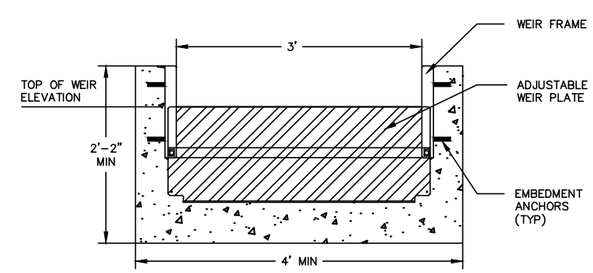

WEIR DETAIL - SECTION VIEW

NOT TO SCALE

0 1" 2"

TWO INCHES AT FULL SCALE. IF NOT, SCALE ACCORDINGLY

Gray & Osborne, Inc.
CONSULTING ENGINEERS
701 DEXTER AVENUE NORTH SUITE 200
SEATTLE, WASHINGTON 98109 • (206) 284-0860

DATE: FEB 2016
SCALE: NOTED
DRAWN: B.D.C
CHECKED:
APPROVED:

PRELIMINARY NOT FOR CONSTRUCTION

No.	REVISION	DATE	APPD

CHI-HENG WANG — STATE OF WASHINGTON — 36930 — REGISTERED PROFESSIONAL ENGINEER

BRIAN L. SOUBMINE — STATE OF WASHINGTON — 36931 — REGISTERED PROFESSIONAL ENGINEER

CITY OF SAMMAMISH
KING COUNTY WASHINGTON
212TH WAY SE IMPROVEMENTS
STORM DRAINAGE DETAILS

SHEET: SD-6
OF: XX

JOB NO.: 14630
DWG: STRM_DET

M:\SAMMAM\14630 212th Way FINAL DESIGN\01 Design\Planset\STRM_DET.dwg, 2/19/2016 4:07 PM, ----

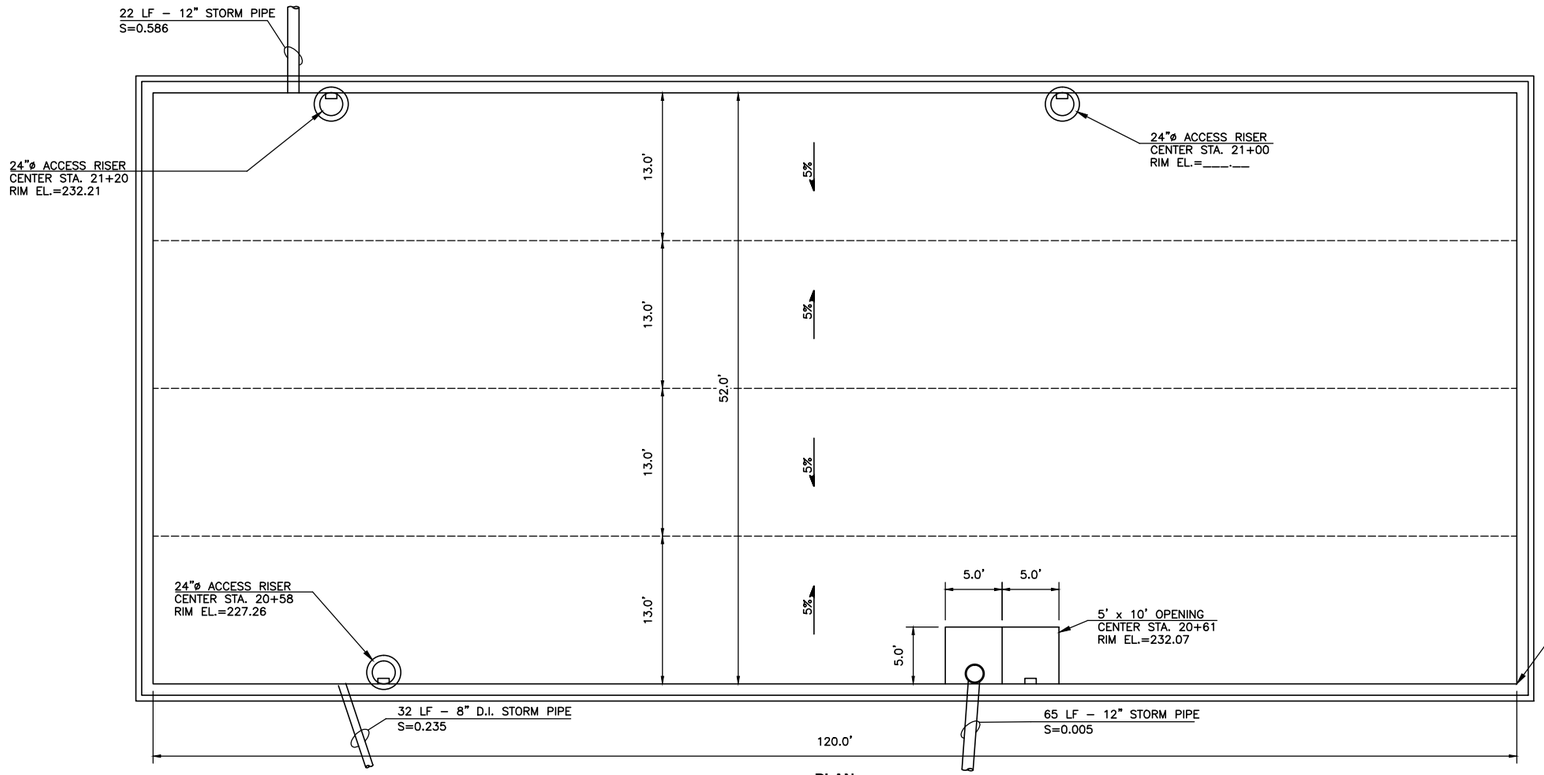

PLAN

NOT TO SCALE

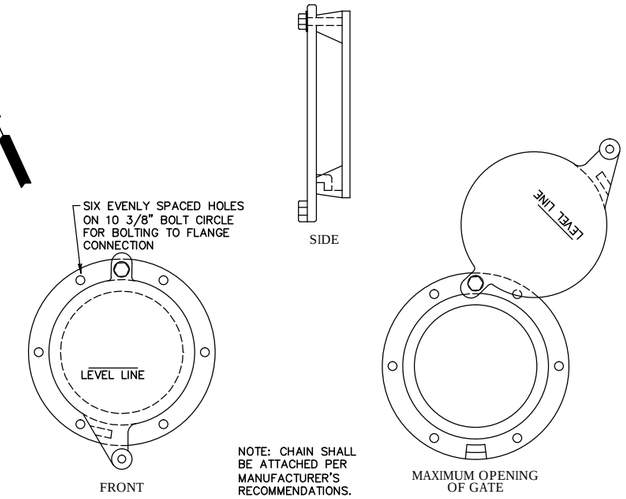

SHEAR GATE DETAIL

NOT TO SCALE

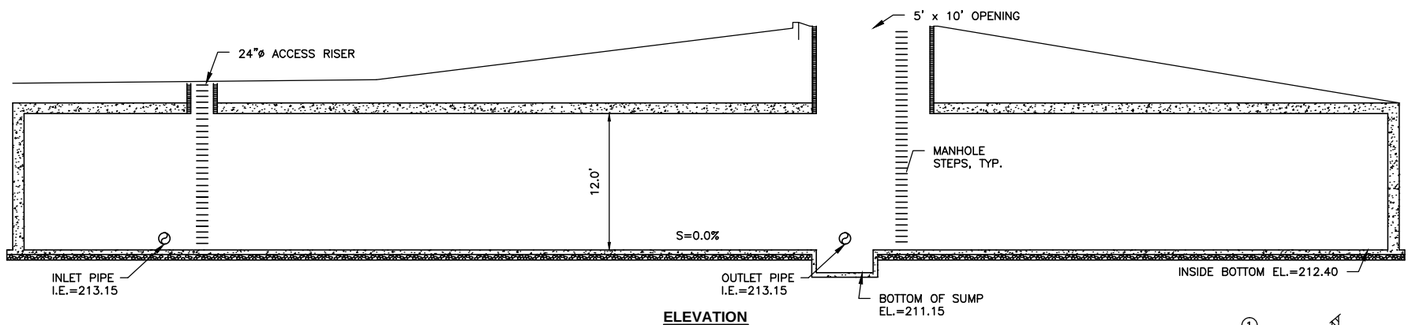

ELEVATION

NOT TO SCALE

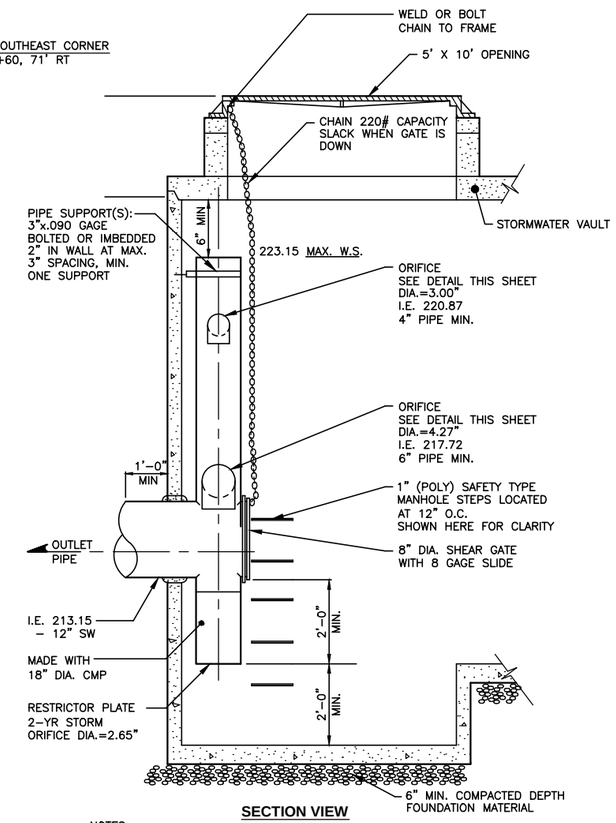

SECTION VIEW

NOTES:

1. RESTRICTOR UNIT SHALL BE CONSTRUCTED OF CORRUGATED POLYETHYLENE PIPE AASHTO M294 TYPE S, POLYVINYL CHLORIDE (PVC) ASTM D–3034 SCHEDULE 40, OR ALUMINIZED CMP.
2. FOR PVC APPLICATIONS, ALL CONNECTIONS SHALL BE MADE USING STANDARD FITTINGS, NO WELDING SHALL BE USED.

FLOW CONTROL STRUCTURE

NOT TO SCALE

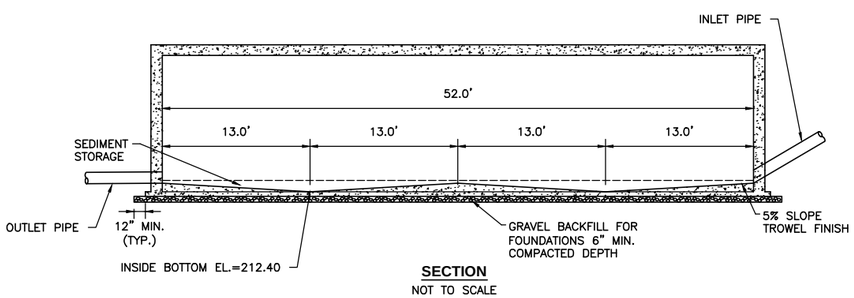

SECTION

NOT TO SCALE

STORMWATER DETENTION VAULT

NOT TO SCALE

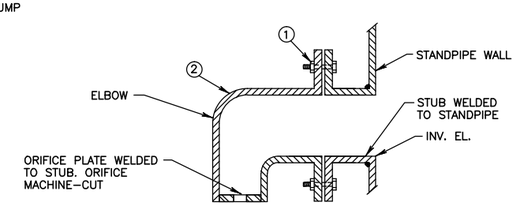

ALL PARTS TO BE HDPE OR PVC OR ALUMINUM EXCEPT AS NOTED

NOTES:

1. 1/2" THICK BOLT FLANGE TAPPED FOR (3) 1/2" DIAMETER NYLON BOLTS–INCLUDE A NEOPRENE GASKET (ELEVATION PER PLANS).
2. WELDED 90 DEG. BEND (SIZE PER PLANS) WITH 1/2" THICK BOLT FLANGE DRILLED FOR 1/2" DIAMETER NYLON BOLTS.

SECONDARY ORIFICE DETAIL

NOT TO SCALE

0 1" 2"

TWO INCHES AT FULL SCALE.
IF NOT, SCALE ACCORDINGLY

Gray & Osborne, Inc.
CONSULTING ENGINEERS
701 DEXTER AVENUE NORTH SUITE 200
SEATTLE, WASHINGTON 98109 • (206) 284-0860

DATE: FEB 2016
SCALE: NOTED
DRAWN: B.DRAH
CHECKED: MJB
APPROVED: MJB

PRELIMINARY
NOT FOR
CONSTRUCTION

No.	REVISION	DATE	APPD

CHI-HENG WANG
STATE OF WASHINGTON
40368
REGISTERED
PROFESSIONAL ENGINEER

BRIAN L. SOURWINE
STATE OF WASHINGTON
36061
REGISTERED
PROFESSIONAL ENGINEER

CITY OF SAMMAMISH
KING COUNTY WASHINGTON
212TH WAY SE IMPROVEMENTS
STORM DRAINAGE DETAILS

SHEET: SD-7
OF: XX
JOB NO.: 14630
DWG: STRM_VLT

M:\SAMMAM\14630 212th Way FINAL DESIGN\01 Design\Planset\STRM_VLT.dwg, 2/19/2016 4:13 PM, ----

SITE SPECIFIC DATA			
PROJECT NUMBER		2811	
PROJECT NAME		212TH WAY	
PROJECT LOCATION		SAMMAMISH, WA	
STRUCTURE ID			
TREATMENT REQUIRED			
VOLUME BASED (CF)		FLOW BASED (CFS)	
		0.43	
TREATMENT HGL AVAILABLE (FT)			3.2
PEAK BYPASS REQUIRED (CFS) – IF APPLICABLE			1.55
PIPE DATA	I.E.	MATERIAL	DIAMETER
INLET PIPE 1	183.1	CPEP	12"
INLET PIPE 2			
OUTLET PIPE	181.73	CPEP	12"
	PRETREATMENT	BIOFILTRATION	DISCHARGE
RIM ELEVATION	186.3±		
SURFACE LOAD	H20 IN-DIRECT	H20 IN-DIRECT	H20 IN-DIRECT
FRAME & COVER	ø30"	3'X5'	ø24"
WETLANDMEDIA VOLUME (CY)			8.3
WETLANDMEDIA DELIVERY METHOD			TBD
ORIFICE SIZE (DIA. INCHES)			TBD
NOTES:			

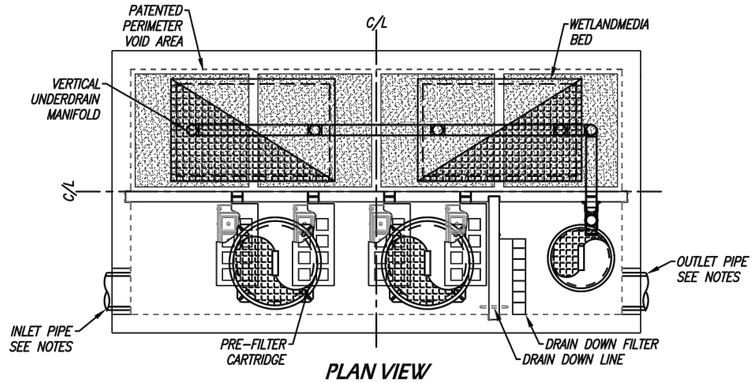

PLAN VIEW

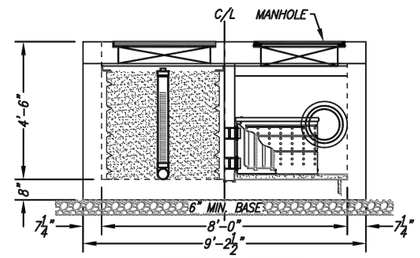

LEFT END VIEW
BIOFILTRATION/PRETREATMENT

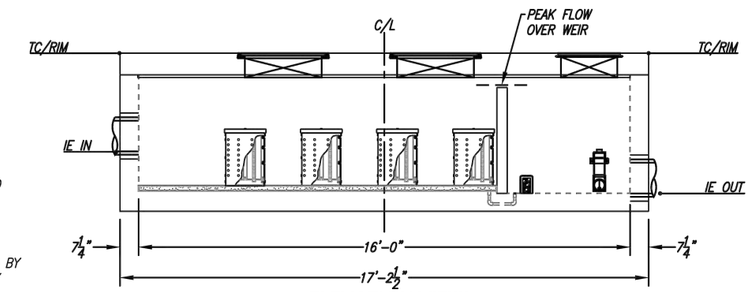

ELEVATION VIEW

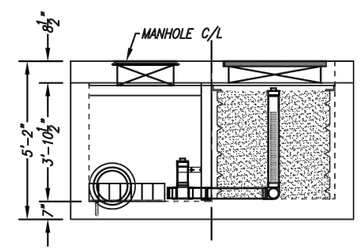

RIGHT END VIEW
DISCHARGE/BIOFILTRATION

INSTALLATION NOTES

1. CONTRACTOR TO PROVIDE ALL LABOR, EQUIPMENT, MATERIALS AND INCIDENTALS REQUIRED TO OFFLOAD AND INSTALL THE SYSTEM AND APPURTENANCES IN ACCORDANCE WITH THIS DRAWING AND THE MANUFACTURERS SPECIFICATIONS, UNLESS OTHERWISE STATED IN MANUFACTURERS CONTRACT.
2. UNIT MUST BE INSTALLED ON LEVEL BASE. MANUFACTURER RECOMMENDS A MINIMUM 6" LEVEL ROCK BASE UNLESS SPECIFIED BY THE PROJECT ENGINEER. CONTRACTOR IS RESPONSIBLE TO VERIFY PROJECT ENGINEERS RECOMMENDED BASE SPECIFICATIONS.
3. ALL PIPES MUST BE FLUSH WITH INSIDE SURFACE OF CONCRETE. (PIPES CANNOT INTRUDE BEYOND FLUSH). INVERT OF OUTFLOW PIPE MUST BE FLUSH WITH DISCHARGE CHAMBER FLOOR. ALL GAPS AROUND PIPES SHALL BE SEALED WATER TIGHT WITH A NON-SHRINK GROUT PER MANUFACTURERS STANDARD CONNECTION DETAIL AND SHALL MEET OR EXCEED REGIONAL PIPE CONNECTION STANDARDS.
4. CONTRACTOR TO SUPPLY AND INSTALL ALL EXTERNAL CONNECTING PIPES.
5. CONTRACTOR RESPONSIBLE FOR INSTALLATION OF ALL RISERS, MANHOLES, AND HATCHES. CONTRACTOR TO GROUT ALL MANHOLES AND HATCHES TO MATCH FINISHED SURFACE UNLESS SPECIFIED OTHERWISE.
6. DRIP OR SPRAY IRRIGATION REQUIRED ON ALL UNITS WITH VEGETATION.

GENERAL NOTES

1. MANUFACTURER TO PROVIDE ALL MATERIALS UNLESS OTHERWISE NOTED.
2. ALL DIMENSIONS, ELEVATIONS, SPECIFICATIONS AND CAPACITIES ARE SUBJECT TO CHANGE. FOR PROJECT SPECIFIC DRAWINGS DETAILING EXACT DIMENSIONS, WEIGHTS AND ACCESSORIES PLEASE CONTACT MANUFACTURER.

STORMWATER TREATMENT VAULT
NOT TO SCALE

0 1" 2"
TWO INCHES AT FULL SCALE.
IF NOT, SCALE ACCORDINGLY

Gray & Osborne, Inc.
CONSULTING ENGINEERS
701 DEXTER AVENUE NORTH SUITE 200
SEATTLE, WASHINGTON 98109 • (206) 284-0860

DATE: FEB 2016
SCALE: NOTED
DRAWN: B.D.C
CHECKED:
APPROVED:

PRELIMINARY NOT FOR CONSTRUCTION

No.	REVISION	DATE	APPD

CHI-HENG HANG
STATE OF WASHINGTON
40260
REGISTERED PROFESSIONAL ENGINEER

BRIAN L. SOURINE
STATE OF WASHINGTON
40260
REGISTERED PROFESSIONAL ENGINEER

CITY OF SAMMAMISH
KING COUNTY WASHINGTON
212TH WAY SE IMPROVEMENTS
STORM DRAINAGE DETAILS

SHEET: SD-8
OF: XX
JOB NO.: 14630
DWG: STRM_DET

M:\SAMMAM\14630 212th Way FINAL DESIGN\01 Design\Planset\STRM_DET.dwg, 2/19/2016 4:14 PM, ----

GENERAL STRUCTURAL NOTES

GENERAL
THE GENERAL CONTRACTOR SHALL VERIFY ALL DIMENSIONS AND SITE CONDITIONS BEFORE STARTING WORK. THE ENGINEER SHALL BE NOTIFIED OF ANY DISCREPANCY. USE DETAIL MARKED "TYPICAL" WHEREVER APPLICABLE. CHANGES, OMISSIONS OR SUBSTITUTIONS ARE NOT PERMITTED WITHOUT WRITTEN APPROVAL OF THE ENGINEER. REFER TO THE SPECIFICATIONS FOR FURTHER REQUIREMENTS. DO NOT SCALE THE DRAWINGS.

ALL MATERIALS AND WORKMANSHIP SHALL CONFORM TO THE 2012 EDITION OF THE INTERNATIONAL BUILDING CODE.

THE DESIGN, ADEQUACY AND SAFETY OF ERECTION BRACING, SHORING, TEMPORARY SUPPORTS, ETC., IS THE SOLE RESPONSIBILITY OF THE CONTRACTOR, AND HAS NOT BEEN CONSIDERED BY THE ENGINEER OF RECORD. THE CONTRACTOR IS RESPONSIBLE FOR THE STABILITY OF THE STRUCTURE PRIOR TO THE COMPLETION OF ALL SHEAR WALLS, ROOF AND FLOOR DIAPHRAGMS AND FINISH MATERIALS. THE CONTRACTOR SHALL PROVIDE THE NECESSARY BRACING TO PROVIDE STABILITY PRIOR TO THE APPLICATION OF THE ABOVE MENTIONED COMPONENTS.

THE GENERAL NOTES APPLY TO ALL STRUCTURES UNLESS NOTED OTHERWISE (U.N.O.). LOCATION AND SIZE OF ANCHOR BOLTS FOR SPECIFIC EQUIPMENT SHALL BE SPECIFIED BY THE VENDOR. CONTRACTOR SHALL COORDINATE LOCATIONS OF STRUCTURAL OPENINGS, PENETRATIONS AND EMBEDDED ITEMS WITH PLANS AND WITH SUPPLIERS AND SUBCONTRACTORS AS MAY BE REQUIRED.

SHOP DRAWINGS
SHOP DRAWINGS, WHERE REQUIRED, SHALL BE CHECKED AND APPROVED BY THE GENERAL CONTRACTOR PRIOR TO SUBMITTING FOR ENGINEER REVIEW. SHOP DRAWINGS SHALL BE SUBMITTED TO THE ENGINEER FOR REVIEW OF DESIGN INTENT, PRIOR TO FABRICATION. GENERAL CONTRACTOR IS RESPONSIBLE FOR VERIFICATION AND COORDINATION OF DIMENSIONS AND DETAILS FOR EACH SUBCONTRACTOR.

DESIGN LOADS
TRAFFIC LOAD (UNIFORM LOAD).....250 PSF
TRAFFIC LOAD.....HL-93
SOIL WEIGHT (MOIST).....135 PCF

EARTHQUAKE DESIGN DATA
PEAK GROUND ACCELERATION.....0.413
SITE CLASS.....D

FOUNDATION DATA:
ALLOWABLE BEARING PRESSURE:.....3000 PSF

EXTEND ALL EXTERIOR FOOTINGS 2'-0" MINIMUM BELOW FINISHED GRADE. UNO (UNLESS NOTED OTHERWISE), BOTTOM OF ALL FOOTINGS TO BEAR ON STRUCTURAL FILL AS SHOWN ON THE PLANS. NO FOOTING SHALL BEAR HIGHER THAN 1 VERTICAL TO 1.5 HORIZONTAL SLOPE ABOVE ANY EXCAVATION, EXISTING OR PLANNED. CONTRACTOR SHALL PROVIDE TEMPORARY SHORING TO PREVENT MOVEMENT OF WALLS IF BACKFILL IS PLACED BEFORE FLOOR SYSTEM IS IN PLACE. THERE SHALL BE 95% COMPACTION (ASTM D1557 MODIFIED PROCTOR DENSITY) OF ALL BACKFILL SOIL UNDER SLABS ON GRADE.

CAST-IN-PLACE CONCRETE
CONCRETE SHALL HAVE THE FOLLOWING PROPERTIES:
28-DAY STRENGTH f'c=4,000 PSI
AIR ENTRAINMENT: 5%-7%
MAXIMUM SLUMP: 3" FOR SLABS FOOTINGS, 4" FOR WALLS, COLUMNS AND BEAMS. CONSTRUCTION TO BE IN ACCORDANCE WITH ACI 318.

SUBMIT MIX DESIGN FOR REVIEW AND PROVIDE NOT LESS THAN 6 SACKS OF CEMENT PER CUBIC YARD FOR ALL CONCRETE WITH MAXIMUM W/C=0.45.

REINFORCING STEEL
WELDED WIRE FABRIC (W.W.F.): ASTM A82 AND A185
DEFORMED BARS: ASTM A615, GRADE 60
UNLESS OTHERWISE NOTED ON THESE DRAWINGS, MINIMUM CONCRETE COVER FOR REINFORCING BARS SHALL BE AS FOLLOWS:
CONCRETE CAST AGAINST SOIL=3".
FORMED CONCRETE AGAINST SOIL=2".
WALLS, COLUMNS AND BEAMS EXPOSED TO WATER & WEATHER=2".
WALLS, COLUMNS AND BEAMS DRY CONDITION=1 1/2".

PROVIDE 2-#5 MIN. U.N.O. TRIM BARS AROUND ALL OPENINGS IN CONCRETE WALLS OR SLAB EXTENDING 2'-6" PAST CORNERS, TYP. AT TIME OF CONCRETE PLACEMENT, REINFORCING SHALL BE FREE OF MUD, OIL, OR OTHER NONMETALLIC COATINGS THAT MAY DECREASE BOND.

WELDING OF REINFORCING BARS SHALL CONFORM TO ANSI/AWS D1.4.
WHERE PERMITTED, LOW HYDROGEN WELDING RODS SHALL BE USED FOR ALL WELDING OF REINFORCING BARS. SPECIAL INSPECTION IS REQUIRED FOR ALL FIELD WELDING.

SUBMIT SHOP DRAWINGS OF REINFORCING STEEL FOR REVIEW BY THE ENGINEER PRIOR TO FABRICATION. REINFORCING SHALL BE DETAILED IN ACCORDANCE WITH ACI 315 AND 318 (LATEST EDITION).

REINF	LAP
#4	2'-4"
#5	3'-0"
#6	3'-6"
#7	4'-3"
#8	4'-10"
#9	5'-3"
#10	6'-6"
#11	8'-0"

1 / TYP — TYP. LAP SCHEDULE
NOT TO SCALE

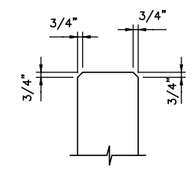

2 / TYP — TYP. CHAMFER DETAIL
NOT TO SCALE

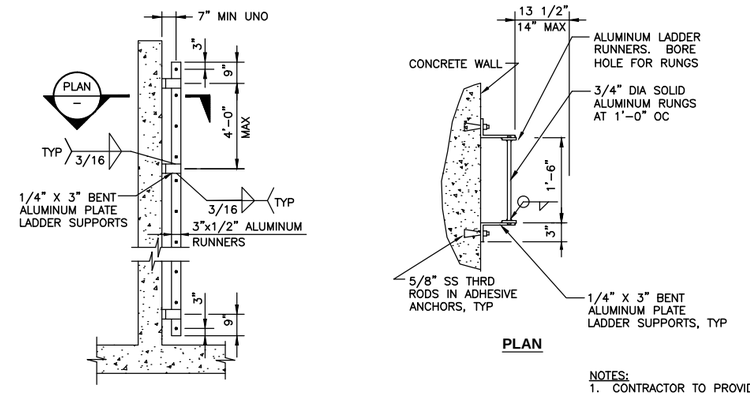

NOTES:
1. CONTRACTOR TO PROVIDE LADDER UP SAFETY POST FOR STORMWATER VAULT LADDERS.

3 / — TYPICAL LADDER DETAIL
NOT TO SCALE

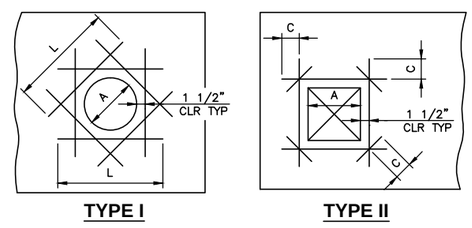

TYPE I — TYPE II

	TYPE I		TYPE II	
OPENING SIZE (A)	MINIMUM BAR LENGTH (L)	BAR SIZE	(C)	BAR SIZE
0" - 12"	3' - 9"	#5	1' - 0"	MATCH VERTICAL BARS OR LARGEST BAR IN SLABS OR WALKWAYS
13" - 18"	4' - 9"	#6	1' - 3"	
19" - 24"	6' - 9"	MATCH VERTICAL BARS OR LARGEST BAR IN SLABS OR WALKWAYS	2' - 6"	
25" - 36"	7' - 9"		2' - 6"	
36"→	8' - 9"		2' - 6"	

NOTE:
ALL BARS, EACH FACE. USE THESE BAR SIZES UNLESS OTHERWISE NOTED.

4 / TYP — TYP PENETRATION REINFORCING DETAIL
NOT TO SCALE

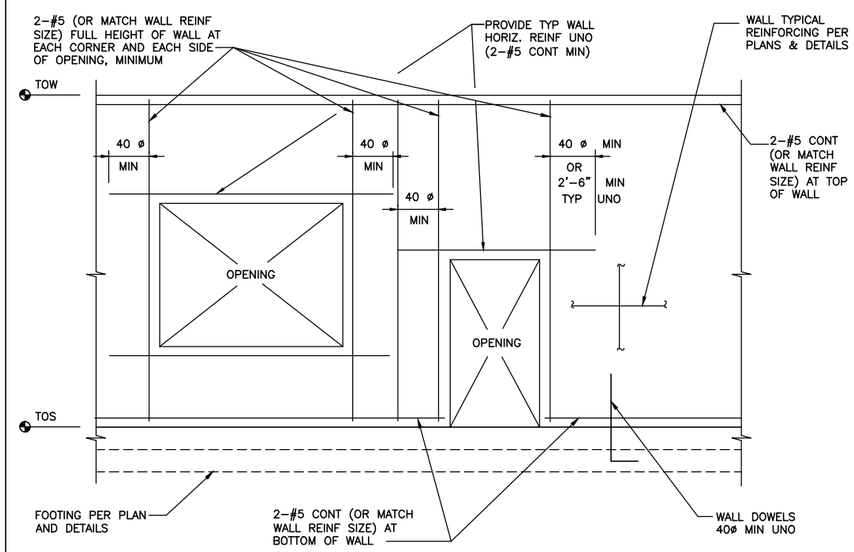

5 / TYP — TYP CONCRETE WALL OPENING DETAIL
NOT TO SCALE

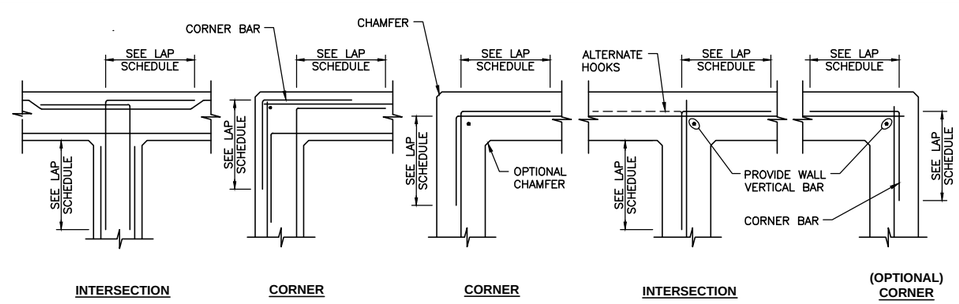

DOUBLE CURTAIN — SINGLE CURTAIN

6 / TYP — TYP REINFORCING @ WALL INTERSECTION DETAIL
NOT TO SCALE

0 1" 2"
TWO INCHES AT FULL SCALE. IF NOT, SCALE ACCORDINGLY

Gray & Osborne, Inc.
CONSULTING ENGINEERS
701 DEXTER AVENUE NORTH SUITE 200
SEATTLE, WASHINGTON 98109 • (206) 284-0860

DATE: FEB 2016
SCALE: NOTED
DRAWN: RAH
CHECKED: MJB
APPROVED: MJB

PRELIMINARY NOT FOR CONSTRUCTION

No.	REVISION	DATE	APPD

CITY OF SAMMAMISH
KING COUNTY WASHINGTON
212TH WAY SE IMPROVEMENTS
GENERAL STRUCTURAL NOTES AND TYPICAL DETAILS

SHEET: S-1
OF: XX
JOB NO.: 14630
DWG: S-STND

m:\SAMMAM\14630 212th way final design\01 design\Planset\Structrual\S-STND.dwg, 2/19/2016 4:21 PM, ----

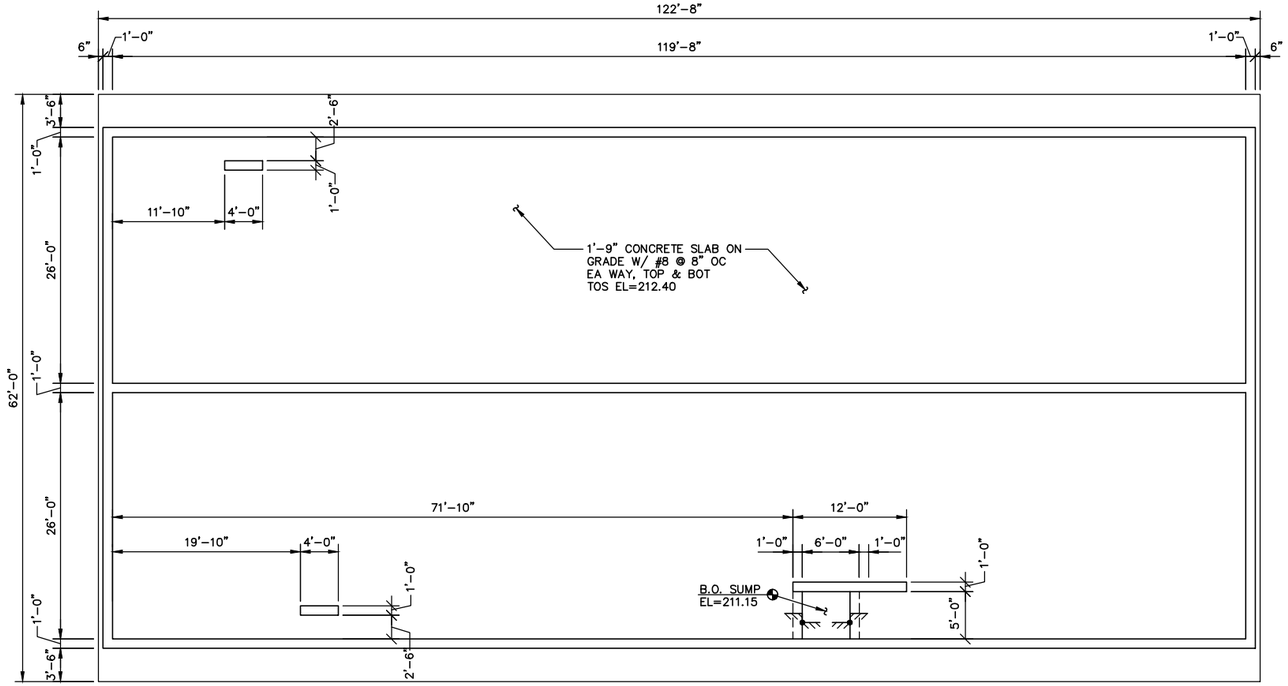

FOUNDATION PLAN

SCALE: 1/8"=1'-0"

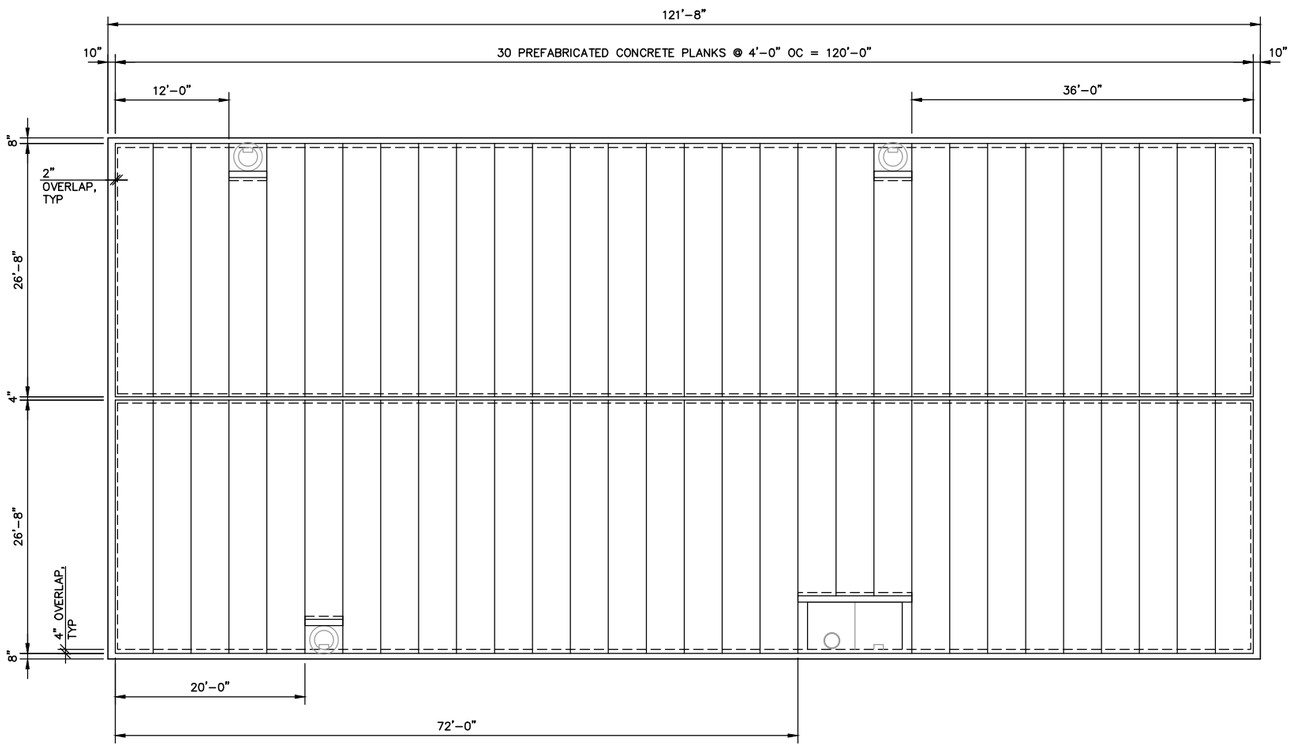

UPPER FRAMING PLAN

SCALE: 1/8"=1'-0"

0 1" 2"

TWO INCHES AT FULL SCALE. IF NOT, SCALE ACCORDINGLY

Gray & Osborne, Inc.
CONSULTING ENGINEERS
701 DEXTER AVENUE NORTH SUITE 200
SEATTLE, WASHINGTON 98109 • (206) 284-0860

DATE:	FEB 2016
SCALE:	NOTED
DRAWN:	RAH
CHECKED:	MJB
APPROVED:	MJB

No.	REVISION	DATE	APPD

PRELIMINARY NOT FOR CONSTRUCTION

CITY OF SAMMAMISH
KING COUNTY WASHINGTON
212TH WAY SE IMPROVEMENTS
FOUNDATION AND UPPER FRAMING PLANS

SHEET: **S-2**
OF: **XX**

JOB NO.: 14630
DWG: S-PLN SECT

m:\SAMMAM\14630 212th way final design\01 design\Planset\Structrual\S-PLN SECT.dwg, 2/19/2016 4:22 PM, ----

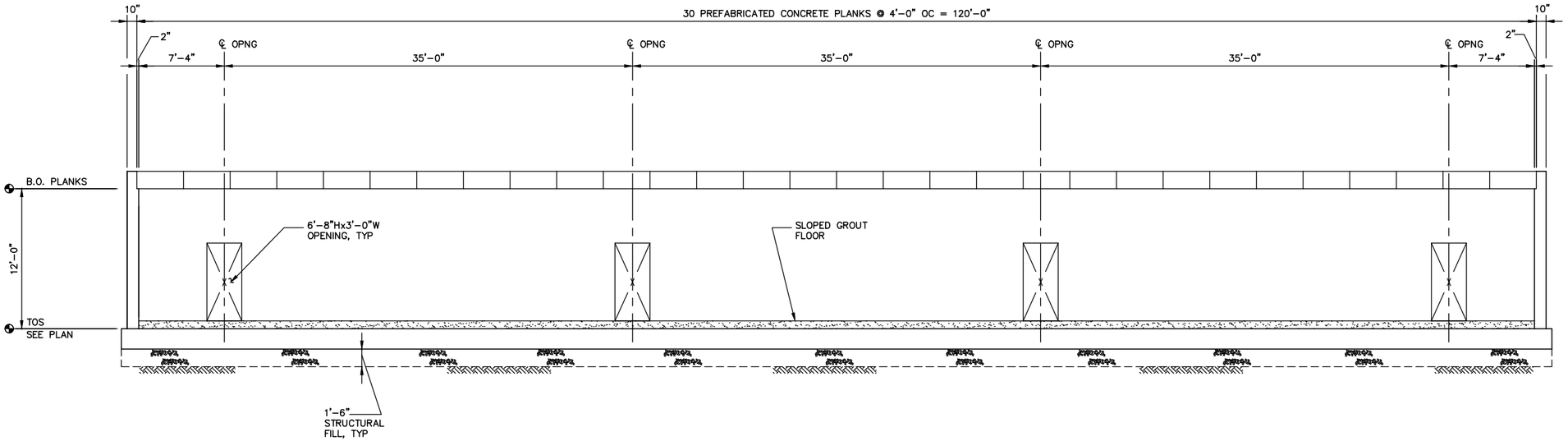

A / S-2 **SECTION**
SCALE: 3/16"=1'-0"

0 1" 2"
TWO INCHES AT FULL SCALE.
IF NOT, SCALE ACCORDINGLY

Gray & Osborne, Inc.
CONSULTING ENGINEERS
701 DEXTER AVENUE NORTH SUITE 200
SEATTLE, WASHINGTON 98109 • (206) 284-0860

DATE:	FEB 2016
SCALE:	NOTED
DRAWN:	RAH
CHECKED:	MJB
APPROVED:	MJB

No.	REVISION	DATE	APPD

PRELIMINARY NOT FOR CONSTRUCTION

CITY OF SAMMAMISH
KING COUNTY WASHINGTON
212TH WAY SE IMPROVEMENTS
SECTIONS

SHEET: **S-3**
OF: **XX**
JOB NO.: 14630
DWG: S-PLN SECT

m:\SAMMAM\14630 212th way final design\01 design\Planset\Structrual\S-PLN SECT.dwg, 2/19/2016 4:22 PM, ----

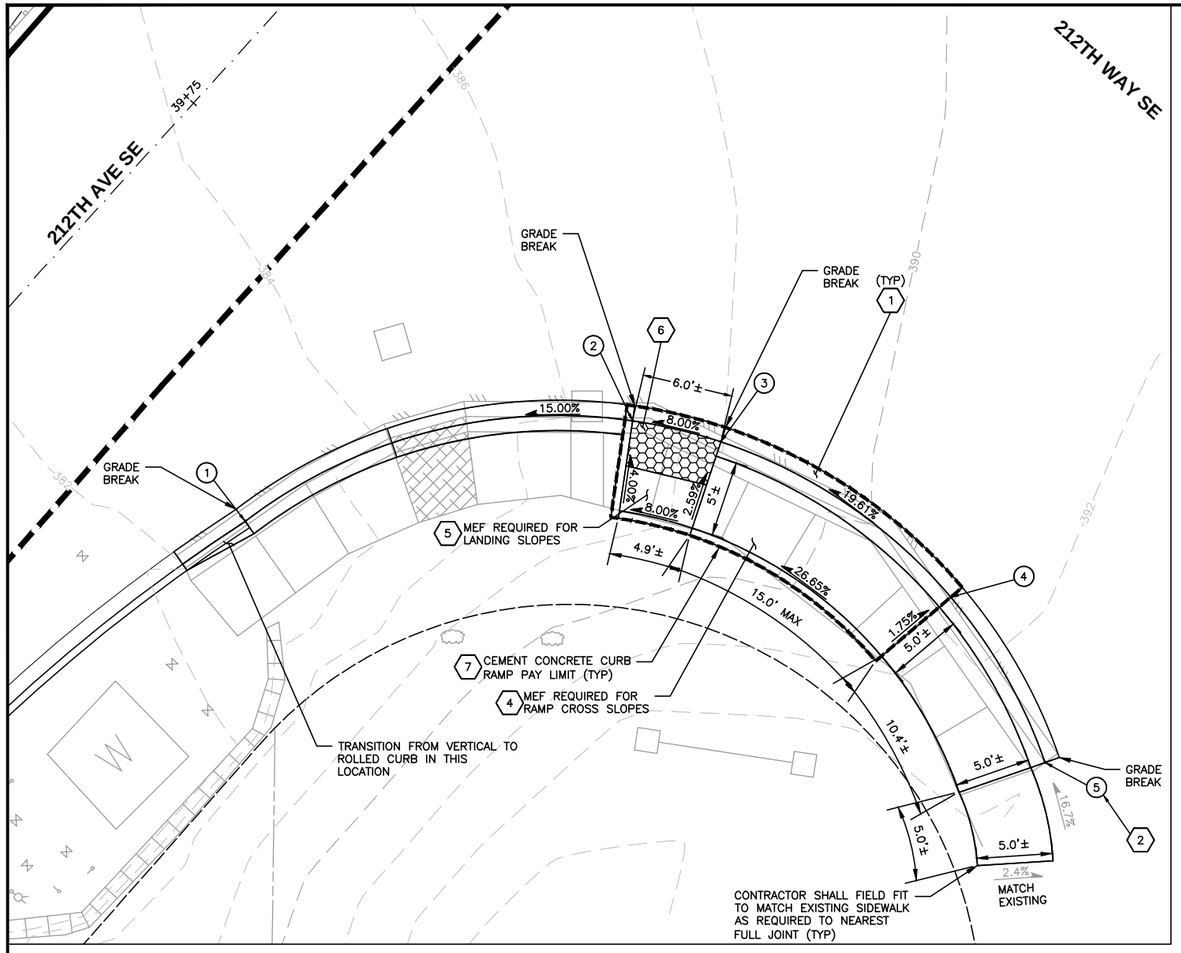

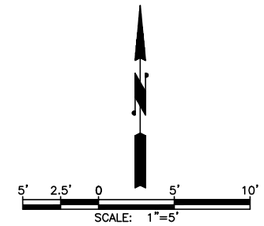

ADDITIONAL CURB RAMP NOTES

1. SEE CONTRACT PLANS FOR THE CURB DESIGN SPECIFIED. SEE SHEET RD-1 FOR CURB AND GUTTER DETAIL.
2. ELEVATIONS WITH " * " CONTRACTOR SHALL MATCH EXISTING ELEVATIONS AT EXISTING CURB/SIDEWALK TIE-INS. (APPROXIMATE ELEVATIONS LISTED).
3. CONTRACTOR TO FIELD VERIFY AND ADJUST RAMP LENGTH TO MEET RAMP SLOPE REQUIREMENTS PER DETAILS. THE CURB RAMP MAXIMUM RUNNING SLOPE AT THE BACK OF THE RAMP SHALL NOT REQUIRE THE RAMP LENGTH TO EXCEED 15-FEET.
4. CURB RAMP. CROSS SLOPE SHALL NOT EXCEED 1.75%.
5. LANDING. CROSS SLOPE SHALL NOT EXCEED 1.75%.
6. DETECTABLE WARNING SURFACE. SEE STANDARD PLAN F-45.10 ON SHEET RP-3.
7. PARALLEL CURB RAMP, SEE DETAIL, SHEET RP-3.

212TH WAY SE / 212TH AVE SE - SW RAMP - CURB RETURN AND ADA RAMP TABLE

NUMBER	TYPE	STATION	OFFSET	FLOWLINE ELEVATION	CURB HEIGHT	DESCRIPTION	CENTER
1	PC	39+56.54	21.05 RT	382.64	6" (APPROX)	L=64.28' R=33.99' Δ=108° 20' 12"	39+81.48 39.90 RT
2	LANDING	39+78.99	35.54 RT	386.71	--		
3	LANDING	39+81.89	40.78 RT	387.19	--		
4	RAMP	39+84.52	58.91 RT	390.82	6" (APPROX)		
5	PT	39+80.64	70.84 RT	393.30	6" (APPROX)		

0 1" 2"
TWO INCHES AT FULL SCALE.
IF NOT, SCALE ACCORDINGLY

Gray & Osborne, Inc.
CONSULTING ENGINEERS
701 DEXTER AVENUE NORTH SUITE 200
SEATTLE, WASHINGTON 98109 • (206) 284-0860

DATE: FEB 2016
SCALE: 1"=5'(H)
DRAWN: C.N.T.
CHECKED: C.B.W.
APPROVED: B.L.S.

PRELIMINARY NOT FOR CONSTRUCTION

No.	REVISION	DATE	APPD

CHI-BENG WANG
STATE OF WASHINGTON
36395
REGISTERED PROFESSIONAL ENGINEER

BRIAN L. SOURWINE
STATE OF WASHINGTON
40091
REGISTERED PROFESSIONAL ENGINEER

CITY OF SAMMAMISH
KING COUNTY WASHINGTON
212TH WAY SE IMPROVEMENTS
RAMP DESIGN

SHEET: RP-1
OF: XX
JOB NO.: 14630
DWG: RAMP-1

M:\SAMMAM\14630 212th Way FINAL DESIGN\01 Design\Planset\RAMP-1.dwg, 2/19/2016 4:03 PM, ----

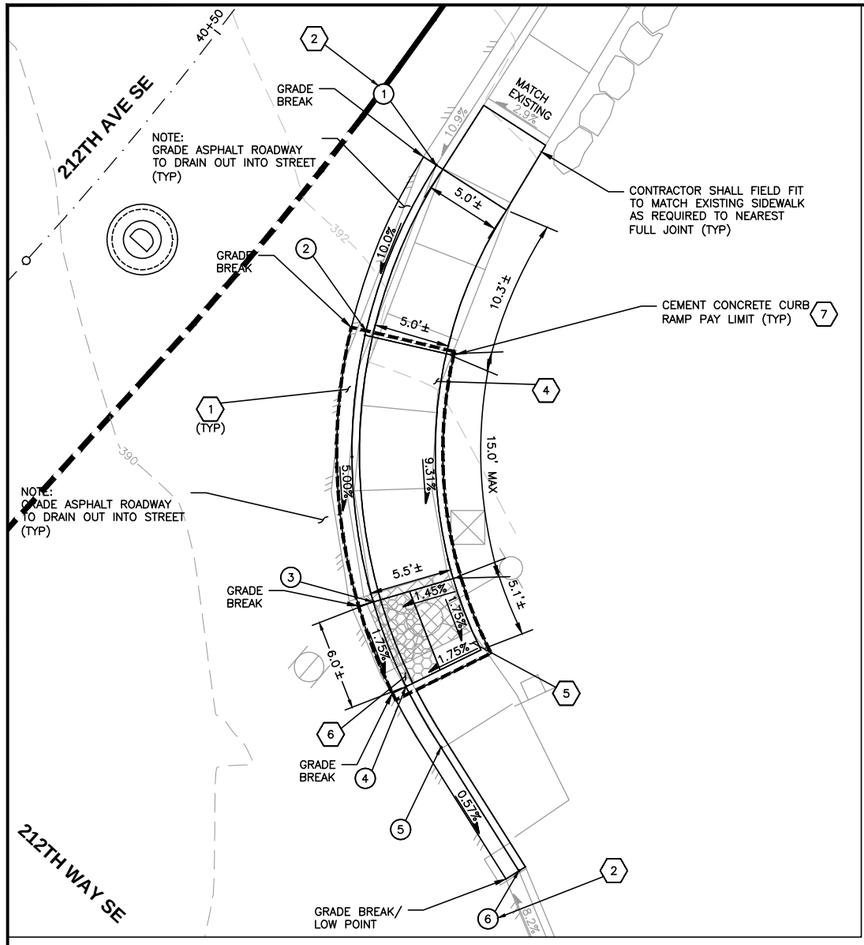

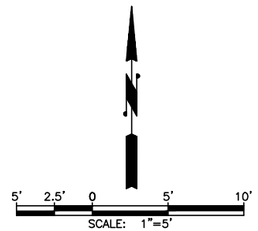

ADDITIONAL CURB RAMP NOTES

1. SEE CONTRACT PLANS FOR THE CURB DESIGN SPECIFIED. SEE SHEET RD-1 FOR CURB AND GUTTER DETAIL.
2. ELEVATIONS WITH " * " CONTRACTOR SHALL MATCH EXISTING ELEVATIONS AT EXISTING CURB/SIDEWALK TIE-INS. (APPROXIMATE ELEVATIONS LISTED).
3. CONTRACTOR TO FIELD VERIFY AND ADJUST RAMP LENGTH TO MEET RAMP SLOPE REQUIREMENTS PER DETAILS. THE CURB RAMP MAXIMUM RUNNING SLOPE AT THE BACK OF THE RAMP SHALL NOT REQUIRE THE RAMP LENGTH TO EXCEED 15-FEET.
4. CURB RAMP. CROSS SLOPE SHALL NOT EXCEED 1.75%.
5. LANDING. CROSS SLOPE SHALL NOT EXCEED 1.75%.
6. DETECTABLE WARNING SURFACE. SEE STANDARD PLAN F-45.10 ON SHEET RP-3.
7. PARALLEL CURB RAMP, SEE DETAIL, SHEET RP-3.

212TH WAY SE / 212TH AVE SE - NE RAMP - CURB RETURN AND ADA RAMP TABLE

NUMBER	TYPE	STATION	OFFSET	FLOWLINE ELEVATION	CURB HEIGHT	DESCRIPTION	CENTER
1	PC	40+51.69	16.82 RT	392.94	6" (APPROX)	L=40.67' R=35.08' Δ=66° 24' 59"	40+34.75 24.65 RT
2	RAMP	40+40.83	20.10 RT	391.72	6" (APPROX)		
3	LANDING	40+29.10	32.08 RT	390.83	--		
4	LANDING	40+26.42	37.44 RT	390.72	--		
5	PT	40+25.01	41.85 RT	390.69	6" (APPROX)		
6	--	40+22.44	51.14 RT	390.64	6" (APPROX)		

0 1" 2"
TWO INCHES AT FULL SCALE. IF NOT, SCALE ACCORDINGLY

Gray & Osborne, Inc.
CONSULTING ENGINEERS
701 DEXTER AVENUE NORTH SUITE 200
SEATTLE, WASHINGTON 98109 • (206) 284-0860

DATE: FEB 2016
SCALE: 1"=5'(H)
DRAWN: C.N.T.
CHECKED: C.B.W.
APPROVED: B.L.S.

No.	REVISION	DATE	APPD
	PRELIMINARY NOT FOR CONSTRUCTION		

CHI-HENG WANG STATE OF WASHINGTON 36630 REGISTERED PROFESSIONAL ENGINEER

BRIAN L. SOURWINE STATE OF WASHINGTON 16091 REGISTERED PROFESSIONAL ENGINEER

CITY OF SAMMAMISH
KING COUNTY WASHINGTON
212TH WAY SE IMPROVEMENTS
RAMP DESIGN

SHEET: RP-2
OF: XX
JOB NO.: 14630
DWG: RAMPS

M:\SAMMAM\14630 212th Way FINAL DESIGN\01 Design\Planset\RAMPS.dwg, 2/19/2016 4:05 PM, ----

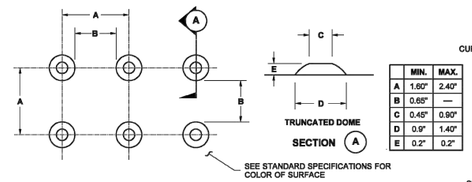

	MIN.	MAX.
A	1.60"	2.40"
B	0.65"	—
C	0.45"	0.90"
D	0.9"	1.40"
E	0.2"	0.2"

TRUNCATED DOME SPACING
SEE NOTE 3

TRUNCATED DOME DETAILS

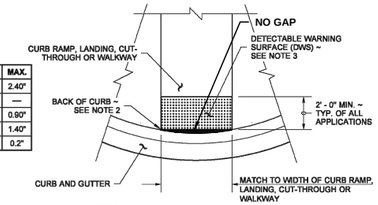

DETECTABLE WARNING SURFACE DETAIL

NOTES

1. The Detectable Warning Surface (DWS) shall extend the full width of the curb ramp (exclusive of flares) or the landing.
2. The Detectable Warning Surface shall be placed at the back of curb, and ~~need not follow the radius.~~ MOEDIFY DEPRESSED CURB WIDTH TO MATCH DETECTABLE WARNING SURFACE EDGE
3. The rows of truncated domes shall be aligned to be perpendicular to the grade break at the back of curb.
4. The rows of truncated domes shall be aligned to be parallel to the direction of travel.
5. If curb and gutter are not present, such as a shared-use path connection, the Detectable Warning Surface shall be placed at the pavement edge.
6. See **Standard Plans** for sidewalk and curb ramp details.
7. If a curb ramp is required, the location of the Detectable Warning Surface must be at the bottom of the ramp and within the required distance from the rail.
8. When the grade break between the curb ramp and the landing is less than or equal to 5 ft. from the back of curb at all points, place the Detectable Warning Surface on the bottom of the curb ramp.

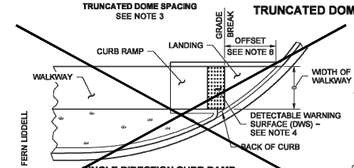

SINGLE DIRECTION CURB RAMP
(GRADE BREAK BETWEEN CURB AND LANDING ≤ 5 FT. FROM BACK OF CURB)
(SEE NOTE 6)

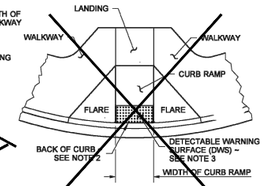

PERPENDICULAR CURB RAMP
(SEE NOTE 6)

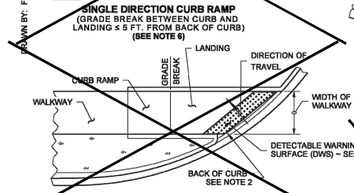

SINGLE DIRECTION CURB RAMP
(GRADE BREAK BETWEEN CURB AND LANDING > 5 FT. FROM BACK OF CURB)
(SEE NOTE 6)

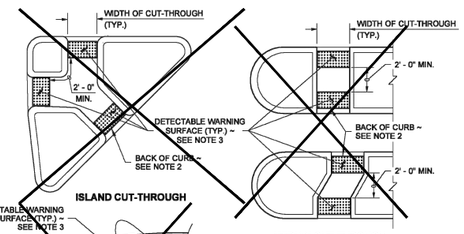

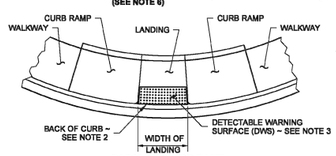

PARALLEL CURB RAMP
(SEE NOTE 6)

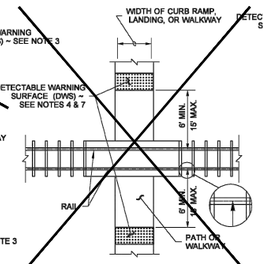

PEDESTRIAN RAILROAD CROSSING

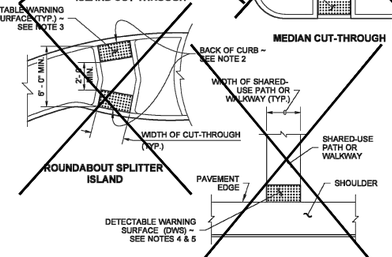

ROUNDABOUT SPLITTER ISLAND

SHARED-USE PATH CONNECTION

PLACEMENT GUIDELINES

MODIFIED
DETECTABLE WARNING SURFACE
STANDARD PLAN F-45.10-01

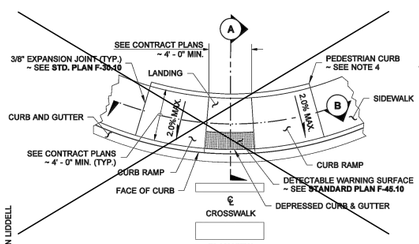

PLAN VIEW
TYPE PARALLEL A

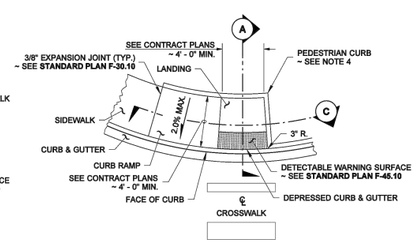

PLAN VIEW
TYPE PARALLEL B

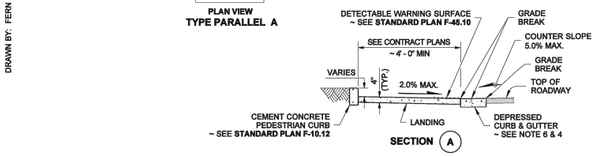

SECTION A

NOTES

1. ~~Provide a separate curb ramp for each marked or unmarked crosswalk. Curb ramp location shall be placed within the width of the associated crosswalk, or as shown in the Contract Plans.~~
2. Where "GRADE BREAK" is called out, the entire length of the grade break between the two adjacent surface planes shall be flush.
3. Do not place gratings, junction boxes, access covers, or other appurtenances in front of thre curb ramp or on any part of the curb ramp or landing.
4. See Contract Plans for the curb design specified. ~~See Standard Plan F-10.12 for Curb, Curb and Gutter,~~ and Pedestrian Curb Details.
5. ~~See Standard Plan F-30.10 for Cement Concrete Sidewalk Details. See Contract Plans for width and placement of sidewalk.~~
6. The Bid Item "Cement Concrete Curb Ramp ~~Type ___~~" does not include the adacent Curb, Curb and Gutter, ~~Pedestrian Curb~~ or Sidewalks.
7. The curb ramp maximum running slope shall not require the ramp length to exceed 15 feet to avoid chasing the slope indefinitely when connecting to steep grades. When applying the 15 foot max. length, the running slope of the curb ramp shall be as flat as feasable.
8. ~~Curb ramp, landing, & flares shall receive broom finish. See Standard Specifications 8-14.~~

LEGEND

SLOPE IN EITHER DIRECTION

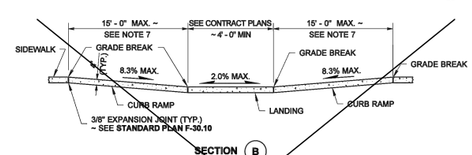

SECTION B

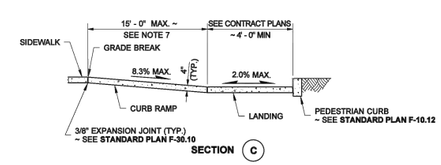

SECTION C

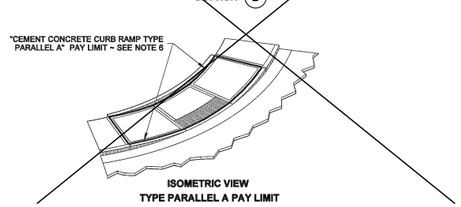

ISOMETRIC VIEW
TYPE PARALLEL A PAY LIMIT

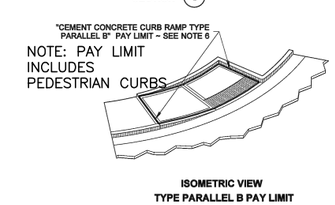

ISOMETRIC VIEW
TYPE PARALLEL B PAY LIMIT

MODIFIED

PARALLEL CURB RAMP
STANDARD PLAN F-40.12-01

0 1" 2"
TWO INCHES AT FULL SCALE.
IF NOT, SCALE ACCORDINGLY

DRAWN BY: FERN LIDDELL

M:\SAMMAM\14630 212th Way FINAL DESIGN\01 Design\Planset\RAMP-DET.dwg, 2/19/2016 4:05 PM, ----

Gray & Osborne, Inc.
CONSULTING ENGINEERS
701 DEXTER AVENUE NORTH SUITE 200
SEATTLE, WASHINGTON 98109 • (206) 284-0860

DATE: FEB 2016	
SCALE: N.T.S.	
DRAWN: C.N.T.	
CHECKED: C.B.W.	
APPROVED: B.L.S.	

PRELIMINARY NOT FOR CONSTRUCTION

No.	REVISION	DATE	APPD

CITY OF SAMMAMISH
KING COUNTY WASHINGTON
212TH WAY SE IMPROVEMENTS
RAMP DETAILS

SHEET: RP-3
OF: XX
JOB NO.: 14630
DWG: RAMP-DET