CITY OF SAMMAMISH
WASHINGTON

ORDINANCE NO. 099-29

AN ORDINANCE OF THE CITY OF SAMMAMISH, WASHINGTON, ADOPTING THE INTERIM SAMMAMISH DEVELOPMENT CODE INCLUDING CHAPTERS REGULATING ADMINISTRATION, TRAFFIC MITIGATION PAYMENTS, SUBDIVISIONS, PLANNING, ZONING, SHORELINE MANAGEMENT AND SCHOOL IMPACT FEES, AND ESTABLISHING AN EFFECTIVE DATE

WHEREAS, the City of Sammamish will incorporate on August 31, 1999; and

WHEREAS, the City desires to begin processing certain development permit applications upon incorporation; and

WHEREAS, in order to begin processing such applications, the City desires to adopt an Interim Sammamish Development Code;

NOW, THEREFORE, THE CITY COUNCIL OF THE CITY OF SAMMAMISH, WASHINGTON, DO ORDAIN AS FOLLOWS:

Section 1. Interim Sammamish Development Code. The City adopts by reference the Interim Sammamish Development Code, attached hereto as Exhibit "A" and by this reference fully incorporated herein, as presently constituted or hereinafter amended, as the City's Interim Development Code. Upon incorporation, all permit applications accepted by the City of Sammamish shall be governed by the Interim Sammamish Development Code.

Section 2. Severability. Should any section, paragraph, sentence, clause or phrase of this Ordinance, or its application to any person or circumstance, be declared unconstitutional or otherwise invalid for any reason, or should any portion of this Ordinance be pre-empted by state or federal law or regulation, such decision or pre-emption shall not affect the validity of the remaining portions of this Ordinance or its application to other persons or circumstances.

Section 3. Effective Date. A summary of this Ordinance consisting of its title shall be published in the official newspaper of the City. This Ordinance shall take effect and be in full force on August 31, 1999.

ADOPTED BY THE CITY COUNCIL AT A REGULAR MEETING THEREOF ON THE 25th DAY OF August, 1999.

F:\APPS\Sammam\ords\landuse2.doc

CITY OF SAMMAMISH

Deputy Mayor Jack Barry

ATTEST/AUTHENTICATED:

Ruth Muller, Interim City Clerk

Approved as to form:

Bruce L. Disend, City Attorney

Filed with the City Clerk: August 19, 1999
Passed by the City Council: August 25, 1999
Ordinance No. 099-29
Date of Publication: September 6, 1999

F:\APPS\Sammam\ords\landuse2.doc

Interim Sammamish Development Code (ISDC)

Title/Chapter		Subject
2		**Administration**
	2.98	Rules of City Departments
14		**Roads and Bridges**
	14.42	City Street Standards
	14.65	Integrated Transportation System
	14.70	Transportation Concurrency Management
	14.75	Mitigation Payment System
	14.80	Intersection Standards
16		**Building and Construction Standards**
	16.05	Uniform Building Code
	16.10	Uniform Mechanical Code
	16.15	Uniform Plumbing Code
	16.20	Uniform Code for the Abatement of Dangerous Buildings
	16.25	Uniform Housing Code
	16.30	Uniform Building Security Code
	16.35	Uniform Sign Construction Code
	16.40	National Electrical Code
	16.50	State Administrative Codes: Barrier Free Facilities; Energy, Ventilation and Indoor Air Quality; and Historic Building
	16.60	Code Conflicts, Liability and Availability
	16.82	Clearing and Grading
17		**Fire Code**
19		**Subdivisions**
	19.01	General Provisions
	19.02	Plats and Condominiums
	19.04	Definitions
	19.08	General Principles of Acceptability
	19.16	Site Improvements
	19.24	Private Short Plats
	19.26	Short Subdivision
	19.28	Preliminary Plat
	19.32	Final Plat
	19.33	Binding Site Plan
	19.34	Residential Condominium Binding Site Plan Review Process
	19.36	Subdividing Procedure
	19.39	Alteration or Vacation of Recorded Subdivisions

19.40 Violation

20 Planning

20.04 General Provisions
20.08 Definitions
20.10 County-wide Planning Policies
20.12 Interim Comprehensive Plan
20.14 Basin Plans
20.18 Plan Amendment Procedures
20.20 Permit Application Procedures, Public Notice, Hearing and Appeals
20.24 Hearing Examiner
20.44 State Environmental Policy Act Procedures

21A Zoning

21A.01 Interim Zoning Code Adoption
21A.02 Authority, Purpose, Interpretation and Administration
21A.04 Zones, Maps and Designations
21A.06 Technical Terms and Land Use Definitions
21A.08 Permitted Uses
21A.12 Density and Dimensions
21A.14 Design Requirements
21A.16 Landscaping and Water Use
21A.18 Parking and Circulation
21A.20 Signs
21A.24 Environmentally Sensitive Areas
21A.26 Communication Facilities
21A.28 Adequacy of Public Facilities and Services
21A.30 Animals, Home Occupations, Home Industry
21A.32 Non-conformance, Temporary Uses and Reuse of Facilities
21A.34 Residential Density Incentives
21A.36 Transfer of Residential Density Credits
21A.38 Special District Overlays
21A.39 Urban Planned Developments
21A.41 Commercial Site Building Permits
21A.42 Review Procedures / Notice Requirements
21A.43 School Impact Fees
21A.44 Decision Criteria
21A.50 Enforcement

23 **Code Compliance**
23.01 Name and Purpose
23.02 General Provisions
23.20 Citations
23.24 Notice and Orders
23.28 Stop Work Orders
23.32 Civil Fines and Civil Penalties
23.36 Appeals and Judicial Enforcement
23.40 Liens
23.99 Miscellaneous Provisions

25 **Shoreline Management**
25.04 Purpose – Title – Scope
25.08 Definitions
25.12 Environment Designations
25.16 Urban Environment
25.20 Rural Environment
25.24 Conservancy Environment
25.32 Procedures

27 **Development Permit Fees**
27.02 Purpose – General Provisions
27.04 Definitions
27.06 Preapplication and Counter Service Fees
27.10 Fees
27.36 Zoning and Land Use Permit
27.44 School Impact Fees
27.46 Urban Plan Development Permit Fees

27A **Financial Guarantees**
27A.10 General
27A.20 Definitions
27A.30 Administration
27A.40 Requirements

Chapter 2.98
RULES OF CITY DEPARTMENTS

Sections:

2.98.010 Chapter intent.
2.98.020 Definitions.
2.98.025 Application.
2.98.030 Statements filed with city clerk.
2.98.040 Index of department records, reports and manuals required.
2.98.050 Information exempt from public inspection.
2.98.060 Rules change notice filing.
2.98.070 Emergency rules or amendments.
2.98.080 Effective date of rules.
2.98.090 Severability.

2.98.010 Chapter intent. Within theCity of Sammamish government, the rule making process shall consist of the establishment of formal procedures through which ordinances adopted by the City council and implemented by the city manager are translated into sets of specific requirements to be carried out and enforced by city departments. It is the intent of the city council to adopt a policy with regard to rulemaking by departments of city government which will be consistent with the spirit and law of the "Public Disclosure Act" (RCW 42.17) specifically those sections pertaining to public records. It is the further intent of the council that rules adopted by county government shall be consistent with the "Open Public Meetings Act" (RCW 42.30). Finally, it is the intent of the council that rules shall be adopted by city government in such a manner as to promote efficiency of government and also afford citizens fair notice and due process.

2.98.020 Definitions. For the purpose of this chapter:

A. "
Deaprtment means any city administrative office, executive department, , officer, or other organizational unit of the city authorized by law to make rules or to adjudicate contested cases, except those in the legislative branch constitutional right prior or subsequent to the determination by the department of the legal rights, duties or privileges of specific parties. Contested cases shall also include cases in which the granting of an application is contested by a person having standing to contest under the law or department rules.

C. "Penalty" means a punishment established by law or ordinance imposed as a consequence of failing to abide by or comply with lawful orders, rules or regulations. A penalty may be in the form of a sum of money, imprisonment, loss of privilege or status, or administrative sanction appropriate to the nature of the offense.

D. "Rule" means any department order, directive or regulation of general applicability:

1. The violation of which subjects a person outside county employment to a penalty;

2. Which subjects a person outside of cityemployment to the payment of a fee;

3. Which establishes, alters or revokes any procedure, practice or requirement relating to department hearings;

4. Which establishes, alters or revokes any qualifications or standards for the issuance, suspension or revocation of licenses to pursue any commercial activity, trade or profession.

2.98.025 Application. A. In keeping with the intent of this chapter, the policy promulgated herein shall apply only to rules involving matters other than the internal management of city departments.

B. The following shall not apply to rules, penalties or fees set pursuant to state law. Rules shall apply to the implementation of policy established by ordinance or state law. Any rule which is in conflict with such a policy shall be null and void. Penalties shall be established only by ordinance. Fees and the amount of fees shall be authorized as set forth in the policies and procedures established in the city code.

RULES OF CITY AGENCIES 2.98.030 - 2.98.040

2.98.030 Statements filed with city clerk. A. Each agency shall adopt rules, as defined in Section 2.98.020, and shall file such rules with the city clerk
central office of such department, for guidance of the public:

1. Descriptions of its central and field organization and the established places at which the employees from whom, and the methods whereby, the public may obtain information, make submittals or requests, or obtain copies of department decisions;

2. Statements of the general course and method by which its operations are channeled and determined, including

the nature and requirements of all formal and informal procedures available;

3. Rules of procedure;

4. Substantive rules of general applicability adopted as authorized by law, and statements of general policy or interpretations of general applicability formulated and adopted by the department;

5. Each amendment or revision to, or repeal of any of the foregoing.

C. Except to the extent that he has actual and timely notice of the terms thereof, a person may not in any manner be required to resort to, or be adversely affected by, a matter required to be published or displayed and not so published or displayed.

D. Rules adopted by department and prepared for filing, distribution and display shall as a minimum comply with the following format requirements:

1. Rules shall be reproduced on eight and one-half by eleven inch white paper.

2. Each set of rules shall contain a cover sheet on which shall be displayed in capitalized letters the title of the department issuing the rules, the subject or title of the rules, and the date the rules become effective.

3. There shall be displayed on the top of each subsequent page, the title of the issuing department and the effective date of the rules.

4. Reference shall be made, either in a foreword to the rules or within the rules themselves, to the law or ordinance upon which the rules are based.

E. Changes to rules shall follow the same format as used in preparing the initial issue. Each change shall be sequentially numbered. All changes shall be prepared as replacements or insert pages, and shall include an insertion guide providing instructions for the addition, or deletion of affected pages.

2.98.040 Index of agency records, reports and manuals required. A. Each department shall maintain and make available for public inspection and copying a current index providing identifying information as to the following records issued, adopted, or promulgated after Septemeber 1, 1999:

1. Final opinions, including concurring and dissenting opinions, as well as orders, made in the adjudication of cases;

2. Those statements of policy and interpretations of policy, statute and the constitution which have been adopted by the agency;

3. Administrative staff manuals and instructions to staff that affect a member of the public;

4. Planning policies and goals, and interim and final planning decisions;

5. Factual staff reports and studies, factual consultant's reports and studies, scientific reports and studies, and any other factual information derived from tests, studies, reports or surveys, whether conducted by public employees or others; and

6. Correspondence, and materials referred to therein, by and with the agency relating to any regulatory, supervisory or enforcement responsibilities of the department, whereby the department determines, or opines upon, or is asked to determine or opine upon, the rights of the state, the public, a subdivision of state government or of any private party.

B. An agency need not maintain such an index, if to do so would be unduly burdensome, but it shall in that event:

1. Issue and publish a formal order specifying the reasons why and the extent to which compliance would unduly burden or interfere with department operations; and

2. Make available for public inspection and copying all indexes maintained for department use.

2.98.050 Information exempt from public inspection. A. The following shall be exempt from public inspection and copying:

1. Personal information in any files;

2. Personal information in files maintained for employees, appointees or elected officials of any public agency to the extent that disclosure would violate their right to privacy;

3. Information required of any taxpayer in connection with the assessment or collection of any tax if the disclosure of the information to other persons would violate the taxpayer's right to privacy or would result in unfair competitive disadvantage to such taxpayer;

4. Specific intelligence information and specific investigative files compiled by investigative, law enforcement and penology departmentsvested with the responsibility to discipline members of any profession, the nondisclosure of which is essential to effective law enforcement or for the protection of any person's right to privacy;

5. Information revealing the identity of persons who file complaints with investigative, law enforcement or penology agencies, except as the complainant may authorize;

6. Test questions, scoring keys and other examination data used to administer a license, employment or academic examination;

7. Except as provided by Chapter 8.26 RCW, the contents of real estate appraisals, made for or by any agency relative to the acquisition of property, until the project is abandoned or until such time as all of the property has been acquired, but in no event shall disclosure be denied for more than three years after the appraisal;

8. Valuable formulae, designs, drawings and research data obtained by any agency within five years of the request for disclosure when disclosure would produce private gain and public loss;

9. Preliminary drafts, notes, recommendations and memorandums in which opinions are expressed or policies formulated or recommended except that a specific record shall not be exempt when publicly cited by an cityin connection with any city action;

10. Records which are relevant to a controversy to which the city is a party but which records would not be available to another party under the rules or pretrial discovery for causes pending in the superior courts.

B. The exemptions of this section shall be inapplicable to the extent that information, the disclosure of which would violate personal privacy or vital governmental interests, can be deleted from the specific records sought. No exemption shall be construed to permit the nondisclosure of statistical information not descriptive of any readily identifiable person or persons.

2.98.060 Rules change notice filing. A. Prior to the adoption, amendment or repeal of any rule, each agency shall give at least twenty days' notice of its intended action by filing the notice with the city clerk, mailing the notice to all persons or agencies who have made timely request of the agency for advance notice of its rulemaking proceedings on a specific topic, and giving public notice by one publication in the official newspaper of City of Sammamish. Such notice shall include:

1. Reference to the authority under which the rule is proposed;

2. A statement of either the terms or substance of the proposed rule or a description of the subjects and issues involved; and

3. The time when, the place where, and the manner in which interested persons may present their views thereon.

B. No rule hereafter adopted is valid unless adopted in substantial compliance with this section, or, if an emergency rule designated as such, adopted in substantial compliance with Section 2.98.070, as now or hereafter amended. In any proceeding a rule cannot be contested on the ground of noncompliance with the procedural requirements of this section, or of Section 2.98.070, as now or hereafter amended, after two years have elapsed from the effective date of the rule.

2.98.070 Emergency rules or amendments. If the department finds that immediate adoption or amendment of a rule is necessary for the preservation of the public health, safety or general welfare, and that observance of the requirements of notice and opportunity to present views on the proposed action would be contrary to the public interest, the agency may dispense with such requirements and adopt the rule or amendment as an emergency rule or amendment. The agency's finding and a brief statement of the reasons for its finding shall be incorporated in the emergency rule or amendment as filed with the clerk of the King County council. An emergency rule or amendment shall not remain in effect for longer than ninety days. This section does not relieve any agency from compliance with any law requiring that its rules be approved by designated persons or bodies before they become effective.

2.98.080 Effective date of rules. A. Emergency rules adopted under Section 2.98.070 shall become effective upon filing with the city clerk. All other rules hereafter adopted shall become effective upon the expiration of thirty days after the date of filing, unless a later date is required by statute or specified in the rule.

B. The city clerk shall, as soon as practicable after the effective date of this chapter, compile and index all rules adopted by each agency.

C. To continue effective, all rules adopted prior to the passage of the ordinance codified herein must be filed with the cityclerk within sixty days of the effective date of the ordinance codified herein.

2.98.090 Severability. If any provision of this chapter or its application to any person or circumstance is held invalid the remainder of the chapter, or the application of the provision to other persons or circumstances is not affected.

Chapter 14.75
MITIGATION PAYMENT SYSTEM

Sections:

14.75.010 Authority and purpose.
14.75.020 Definitions.
14.75.030 Scope and use of impact fees.
14.75.040 Fee schedules and establishment of service districts.
14.75.050 Calculation of MPS fees.
14.75.060 Multifamily Residential MPS fee schedule.
14.75.070 Payment of fees.
14.75.080 Administrative fees.
14.75.090 Administrative fee for preliminary fee calculation.
14.75.100 Project list.
14.75.110 Funding of projects.
14.75.120 Refunds.
14.75.130 Exemptions for schools.
14.75.140 Exemption or reduction for low and moderate income housing.
14.75.150 Request for final decision needed to appeal.
14.75.160 Necessity of compliance.
14.75.300 Severability.

14.75.010 Authority and purpose. A. The Department is authorized to impose transportation impact fees on new development pursuant to The City of Sammamish's powers as an Optional Muncipal Code city; and the Growth Management Act, Laws of 1990, 1st Ex. Sess., chapter 17, RCW Chapter 82.02.

B.The purposes of this chapter are to:

1. Ensure that financial commitments are in place so that adequate transportation facilities are available to serve new growth and development;
2. Promote orderly growth and development by establishing standards requiring that new growth and development pay a proportionate share of the cost of new transportation facilities needed to serve new growth and development;
3. Ensure that transportation impact fees are imposed through established procedures and criteria so that specific developments do not pay arbitrary fees or duplicative fees for the same impact;
4. Implement the transportation policies of the transportation element of the Interim Comprehensive Plan; and
5. Provide additional funding for growth-related transportation improvements identified by the Interim Comprehensive Plan as reasonable and necessary to meet the future growth needs of the City.

14.75.020 Definitions.

A. Corridor. Corridor means the road or set of roads within the City in which vehicle trips to or from a development will take place. Vehicles have flexibility as to an exact route within a corridor but little choice as to whether to use the corridor.

B.MPS project. MPS project means a growth-related road improvement, which is a system improvement, that is selected by the Sammamish City Council for joint private and public funding pursuant to this chapter and that is located:

1. On a City street; or

2. On a County road in unincorporated King County, or on the street of another city when the city has an ordinance implementing the Growth Management Act of 1990, RCW. Chapter 82.02, and when the City of Sammamixh has an appropriate interlocal agreement with the County and/or the city; or

3. On a state road in proximate to the City once the Washington State Department of Transportation (WSDOT) has adopted procedures that will enable it to plan for and fund growth-related improvements to state roads in a manner that satisfies the requirements of the Growth Management Act of 1990, RCW Chapter 82.02, and once the City of Sammamish has an appropriate interlocal agreement with WSDOT.

C. Project cost. Project cost means the estimated cost of constructing an MPS project, including the costs of design and right of way acquisition.

D. Development improvements. Development improvements means site improvements and facilities that are planned and designed to provide service for a particular development and that are necessary for the use and convenience of the occupants or users of the development, and are not system improvements. No transportation improvement or facility that is considered a development improvement shall be included in the MPS project list.

E. Service district. Service district means geographic area defined by the City, or by intergovernmental agreement, in which a defined set of transportation facilities provide service to development within the district. Service districts shall be designated on the basis of sound planning or engineering principles. Development in a service district may, and will likely be found to, impact roadways and intersections both inside and outside the service district, and the MPS fee will reflect a charge for all such impacts. The MPS service districts shall be the MPS zones.

F. Traffic impacts. Traffic impacts means the diminishment of capacity of a roadway or intersection by the addition of new vehicle trips. Effects of new vehicle trips that are not quantifiable or to the extent that the effects cannot be mitigated fully by the addition of new capacity - such as safety hazards and inadequate signalization - are not traffic impacts for MPS purposes.

14.75.030 Scope and use of impact fees. Impact fees:

A. Shall only be imposed for transportation improvements that are reasonably related to the traffic impacts of the new development;

B. Shall not exceed a proportionate share of the costs of transportation improvements that are reasonably related to the new development;

C. Shall be used for transportation improvements that will reasonably benefit the new development;

D. Shall not be used to correct existing deficiencies; and

E. Shall not be imposed to mitigate the same off-site traffic impacts that are being mitigated pursuant to any other law.

14.75.040 Fee schedules and establishment of service districts. A. Fee schedules stating the amount of the MPS fee which residential development shall pay for development subject to MPS fees], are set forth in Attachment B. Subsequent fee schedules shall be established pursuant to Section 14.75.050. All other development shall pay an MPS fee individually calculated by the department, as set forth in Section 14.75.050B. The MPS administrative fee which all developers shall pay is set forth in Sections 14.75.080 and 14.75.090.

B. For purposes of this chapter, the City is divided into service districts as set forth in Attachment A. In each service district, similar types of residential development shall pay the same MPS fee, unless the amount of the fee is altered because:

1. Unusual circumstances exist and the department adjusts the amount of the fee as provided in subsection C below; or

2. The developer submits studies or data showing that the fee as set forth in the applicable schedule or as calculated by the department is in error, as provided in Section 14.75.150.

C. The department may adjust the standard impact fee as set forth in the fee schedules at the time the fee is imposed to consider unusual circumstances in specific cases to ensure that MPS fees are imposed fairly. The department shall set forth its reasons for adjusting the standard MPS fee in written findings.

D. Single Family Residential Fee Per Dwelling Unit
(Multi Family Residential Fee Using Single Family Fee Multiplied by 0.6)

Zone	Fee($)
402	1996
403	2575
405	6247
407	3382
412	1095
413	3044
414	2498
415	632
416	918
419	1416

Attachment B

14.75.050 Calculation of MPS fees. A. The department shall calculate the MPS fees set forth in the fee schedules, Section 14.75.040A, by means of a computer modeling system that:

1. Incorporates the service districts adopted in Section 14.75.040B.

2. Within each service district of the City, determines the standard fee for similar types of residential development, which shall be reasonably related to each development's proportionate share of the cost of the transportation improvement projects being funded by this chapter and shall reasonably reflect the average fee for similar development in the same service district; and

3. Reduces the proportionate share by applying the benefit factors set forth in this chapter.

B. When a development's fee is not determined by the fee schedules adopted in Section 14.75.040A, the department shall calculate the MPS fee by means of a computerized modeling system, which is the same system used to determine the fee schedules, and which:

1. Determines the development's proportionate share of the cost of the transportation improvement projects being funded by this chapter; and

2. Reduces the proportionate share by applying the benefit factors set forth in this chapter.

C. The department's computer model shall calculate proportionate share for use in both fee schedules and individual calculations by:

1. Determining the number of peak hour vehicle trips generated by development that will benefit from the vehicle capacity added, or to be added, by the road improvements on the MPS Project List;

2. Determining the unit cost of added capacity for each MPS project by dividing the estimated cost of each project by the amount of capacity added; and

3. Multiplying the number of peak hour trips added to each MPS project by the unit cost of added capacity for those projects.

D. In calculating proportionate share, the department's modeling system shall:

1. Recognize that a development's traffic will use a corridor rather than a particular roadway;

2. Use trip generation rates published by the Institute of Transportation Engineers (ITE) unless:

a. Actual measurements of the rate of trip generation by similar developments in the City are available, and the director determines that these local measurements are more accurate; or

b. ITE trip generation rates for the proposed development are not available, in which case the director:

(1) May use published rates from another source; or

(2) May calculate the rate from data about the population of the proposed development; or

(3) May require the developer to obtain actual measurements of trip generation rates by similar developments in the City;

3. Reduce the trip generation rate to reflect reductions in traffic that will occur because of transportation strategies, as described in the administrative rules for this title;

4. Identify all roadways and intersections that will be impacted by traffic from each development for as far from the development as the model can measure;

5. Identify when the capacity of an MPS project has been fully utilized;

6. Update the data in the model as often as practical, but at least annually;

7. Estimate the cost of constructing the projects on the MPS Project List as of the time they are placed on the list, and then update the cost estimates at least annually, considering the:

a. Availability of other means of funding transportation facility improvements;

b. Cost of existing transportation facility improvements; and

c. Methods by which transportation facility improvements were financed;

8. Update the fee collected against a project which has already been completed, through an advancement of City funds, at a rate, determined annually, which is equivalent to the City's return on its investments; and

9. Charge a development for the total traffic entering and exiting the development during the peak hour.

E. The department's modeling system shall reduce the calculated proportionate share by giving credit for the following benefit factors:

1. A fifteen (15) percent credit in recognition that some of the trips from a development paying an MPS fee may begin or end within another development which is or has been subject to MPS requirements;

2. Past or future payments made or reasonably anticipated to be made by a development to pay for particular transportation improvements in the form of user fees, debt service payments, taxes or other payments earmarked for or proratable to the same projects being funded by such development's MPS fee; and

3. The value of any dedication of land for, improvement to, or new construction of any system improvements provided by the developer, to transportation facilities that are identified in the MPS project list and that are required by the City as a condition of approving the development activity; provided that when an MPS project is constructed on both on-site and off-site land, the department shall determine, in light of all the circumstances, what proportion of the developer's costs should fairly and reasonably be attributed to the work done on off-site land.

F. The department shall review the fifteen (15) percent factor annually and propose revisions to the factor when appropriate to reflect the actual number of trips generated by new development which also begin or end in other developments which have previously been subject to a fee for the same impact.

G. If the credit determined pursuant to Section 14.75.050E.3 exceeds the amount of the developer's MPS fee, the department shall reimburse the developer from MPS fees collected from other developers for the same MPS project.

H. The amount of credit determined pursuant to Section 14.75.050E.3 shall be credited proportionately among all the lots in the development, and the MPS fee for each lot for which a building permit is applied shall be reduced accordingly.

I. The department shall use the information from the computerized modeling system to prepare an annual recommended fee schedule list. The City Council shall, as often as is necessary but at least annually, by ordinance establish the fee schedule applicable to each service area in the county by adopting, with or without modification, the department's recommended fee schedules.

J. The department shall present to the Council in administrative rules the proposed changes in the service district boundaries, set forth in Section 14.75.040B, as often as is necessary to ensure that the service district boundaries conform to sound planning or engineering principles.

K. To the extent practical, and in accordance with sound planning or engineering principles, the department shall develop and propose to the Council for adoption precalculated fee schedules applicable to types of development in addition to residential development.

14.75.060 Multifamily Residential MPS fee schedule. Fees for multifamily residential dwelling units shall be sixty (60) percent of the fees charged to single family residential dwelling units.

14.75.070 Payment of fees. A. All developers shall pay an MPS fee in accordance with the provisions of this chapter at the time that the applicable development permit is ready for issuance. The fee paid shall be the amount in effect as of the date of permit application.

B. All developers shall pay an MPS administrative fee at the time of application for a development permit as set forth in Sections 14.75.080 and 14.75.090.

C. An individually determined MPS fee shall be calculated at the time of application for a development permit. D. The fee as initially calculated after application for a development permit shall be recalculated at the time of payment if the development is modified or conditioned in such a way as to alter the trip generation rate for the development or the development's total peak hour trips.

E. No development permit shall be issued until the MPS fee is paid, except that developers of residential subdivisions, short subdivisions, urban planned developments, or planned unit development may defer payment until building permits are issued for the lots within the subdivision, short subdivision or planned unit development.

F. A developer may obtain a preliminary determination of the MPS fee before application for a development permit, by paying a processing fee pursuant to Section 14.75.080 and providing the department with the information needed for processing.

G. MPS fees may be paid under protest in order to obtain a permit or other approval of development activity.

14.75.080 Administrative fees. A. All development permits subject to the MPS fees pursuant to Section 14.75.070 shall pay an administrative fee of $60.

B. All development permits which require an individually determined MPS fee pursuant to Section 14.75.070C shall pay an administrative processing fee of $320.

14.75.090 Administrative fee for preliminary fee calculation. Requests to the department for a preliminary determination of an MPS fee prepared pursuant to subsection 14.75.070F shall be charged the administrative processing fee set forth in Section 14.75.080.

14.75.100 Project list. A. In conjunction with the department's annual review and update of the Transportation Needs Report (TNR) element of the Interim Comprehensive Plan the department shall do the following:

1. Identify each project in the TNR that is growth-related and the proportion of each such project that is growth-related;

2. Forecast the total monies available from taxes and other public sources for road improvements over the multi-year program.

3. Calculate the amount of MPS fees already paid; and

4. Identify those MPS projects that have been or are being built but whose performance capacity has not been fully utilized.

B. The department shall use this information to prepare an annual Recommended MPS project list, which shall comprise:

1. The projects on the TNR, in order of priority, that are growth-related and that are capable of being funded with the forecast public monies and the MPS fees already paid; and

2. The MPS projects already built or funded pursuant to this chapter whose performance capacity has not been fully utilized.

C. The City Council, at the same time that it adopts the annual budget and appropriates funds for capital improvement projects, shall establish the annual MPS project list by adopting, with or without modification, the department's Recommended list.

D. Once a project is placed on the MPS project list, a fee shall be imposed on every development that impacts the project until the project is removed from the list by one of the following means:

1. The City Council by ordinance removes the project from the MPS project list, in which case the fees already collected will be refunded if necessary to ensure that the MPS fee remains reasonably related to the traffic impacts of development that have paid an MPS fee; provided, that a refund shall not be necessary if the council transfers the fees to the budget of another project that the City Council determines will mitigate essentially the same traffic impacts; or

2. The capacity created by the project has been fully utilized, in which case the department shall administratively remove the project from the MPS project list.

14.75.110 Funding of projects. A. An MPS trust and agency fund 502is hereby created. The Director of Finance shall be the fund manager. MPS fees shall be placed in appropriate deposit accounts within the MPS fund.

B. The MPS fees paid to the City shall be held and disbursed as follows:

1. The fees collected for each MPS project shall be placed in a deposit account within the MPS fund;

2. The fund manager is authorized to transfer the project fees held in the MPS fund to the CIP fund no less than once a year in the year following receipt of the fees;

3. The non-MPS fee monies appropriated for the MPS project shall comprise both the public share of the project cost and an advancement of that portion of the private share that has not yet been collected in MPS fees;

4. The first money spent by the department on an MPS project after a City Council appropriation shall be deemed to be the fees from the MPS fund;

5. Fees collected after a project has been fully funded by means of one or more City Council appropriations shall constitute reimbursement to the City of the public monies advanced for the private share of the project. The public monies made available by such reimbursement shall be used to pay the public share of other MPS projects or to pay for smaller scale, growth-related projects that are not placed on the MPS Project List; and

6. All interest earned on the MPS fees paid by developers shall be retained in the account and expended for the purpose or purposes for which the impact fees were imposed.

C. MPS fees for transportation facility improvements shall be expended only in conformance with the transportation element of the Interim Comprehensive Plan.

D. MPS projects shall be funded by a balance between MPS fees and other sources of public funds, and shall not be funded solely by MPS fees.

E. MPS fees shall be expended or encumbered for a permissible use within six years of receipt, unless there exists an extraordinary or compelling reason for fees to be held longer than six years. The Director may recommend to the council that the county hold fees beyond six years in cases where extraordinary or compelling reasons exist. Such reasons shall be identified in written findings by the council.

F. The City Council may, on recommendation from the Director, pool the MPS fees already collected from a development whenever appropriate to help finance a project with high priority among the projects impacted by the development.

G. The City Council, on recommendation from the Director, may pool MPS fees whenever necessary to ensure that the fees are expended or encumbered for a permissible use within six (6) years of receipt. Pooling for such purpose shall be accomplished as follows:

1. The Director shall determine which project has the highest priority among the projects for which MPS fees were collected for each such development, and the Director may recommend, and the City Council may approve, transfer of the MPS fees paid by the development to the budget of the project with the highest priority.

2. The department shall indicate in the TNR which projects have funds in their budget that have been pooled to ensure that they are expended or encumbered in a timely manner.

H. The department shall prepare an annual report on each MPS fee account showing the source and amount of all moneys collected, earned or received and transportation improvements that were financed in whole or in part by MPS fees.

14.75.120 Refunds. A. A developer may request and shall receive a refund when the developer does not proceed with the development activity for which MPS fees were paid, and the developer shows that no impact has resulted. However, the MPS administrative fee shall not be refunded.

B. If a property owner appears to be entitled to a refund of MPS fees, the department shall notify the property owner by first class mail deposited with the United States postal service at their last known address. The property owner must submit a request for a refund to the City Council in writing within one year of the date the right to claim the refund arises or the date the notice is given, whichever is later. Any impact fees that are not expended or encumbered within the time limitations established by Section 14.75.110E and for which no application for a refund has been made within this one-year period, shall be retained and expended on the projects for which it was collected.

C. In the event that MPS fees must be refunded for any reason, they shall be refunded with interest earned to the property owners as they appear of record with the King County assessor at the time of the refund.

D. When the City seeks to terminate any or all impact fee requirements under this title, all unexpended or unencumbered funds shall be refunded pursuant to this section. Upon the finding that any or all fee requirements are to be terminated, the City Clerk shall place notice of such termination and the availability of refunds in a newspaper of general circulation at least two (2) times and shall notify all potential claimants by first class mail to the last known address of claimants. Claimants shall request refunds as in subsection B of this section. All funds available for refund shall be retained for a period of one year. At the end of one year, any remaining funds shall be retained by the City in fund 502, but must be expended for the indicated road facilities. This notice of requirement shall not apply if there are no unexpended or unencumbered balances within an account or accounts being terminated.

14.75.130 Exemptions for schools. A. Public school districts shall be exempted from payment of mitigation payment system fees.

B. The amount of the MPS fees not collected from school districts shall be paid from public funds other than impact fee accounts.

14.75.140 Exemption or reduction for low and moderate income housing.

A. Public housing agencies or private non-profit housing developers participating in publicly sponsored or subsidized housing programs may apply to the Department of Community Development for exemptions from MPS fee requirements. The Department

shall review proposed developments of low income or moderate housing by such public or non-profit developers pursuant to criteria and procedures adopted by administrative rule. If the Department determines that a proposed development of low or moderate income housing satisfies the adopted criteria, such development shall be exempted from the requirement to pay an MPS fee.

B.Private developers who dedicate residential units for occupancy by low or moderate income households may apply to the Department of Community Development for reductions in MPS fees. The Department shall review such proposed developments pursuant to criteria and procedures adopted by administrative rule. If the Department determines that a proposed development satisfies the adopted criteria the department shall reduce the calculated MPS fee for the development by an amount that is proportionate to the number of units in the development that satisfy the adopted criteria.

C.Developers of individual low or moderate income households who are building, contracting to build or siting a house may apply to the Department of Community Development for an exemption from MPS fees. The Department shall review such proposed exemptions pursuant to criteria that include household income and assets, and the cost of the site, site improvements and the housing. The procedures and criteria used to evaluate an exception shall be adopted by administrative rule. If the Department determines that a household qualifies for exemption per the adopted criteria, such individual projects shall be exempted from the requirement to pay the MPS fee.

D. The amount of the MPS fees not collected from low or moderate income household development shall be paid from public funds other than impact fee accounts.

E.The Department of Community Development is hereby instructed and authorized to adopt, pursuant to ISDC. Chapter 2.98, administrative rules to implement this section. Such rules shall provide for the administration of this program and shall:

1. Encourage the construction of housing for low or moderate income households by public housing agencies or private non-profit housing developers participating in publicly sponsored or subsidized housing programs;

2. Encourage the construction in private developments of housing units for low or moderate income households that are in addition to units required by another housing program or development condition;

3. Ensure that housing that qualifies as low or moderate cost meets appropriate standards regarding household income, rent levels or sale prices, location, number of units, and development size; and

4. Ensure that developers who obtain an exemption from or reduction of MPS fees pursuant to paragraphs A. and B. of this section will in fact build the proposed low and moderate cost housing and make it available to low income households for a minimum of fifteen (15) years. **14.75.150Request for final decision needed to appeal.** In order to obtain an appealable final decision the developer must:

A. Request in writing a review of the fee amount by department staff. The department staff shall consider any studies and data submitted by the developer seeking to adjust the amount of the fee; and

B.Request in writing reconsideration by the Director of an adverse decision by staff. Such request for reconsideration shall state in detail the grounds for the request. The d
Director shall issue a final, appealable decision after reviewing the request.

14.75.160 Necessity of compliance. A development permit issued after the effective date of the MPS provisions of this chapter shall be null and void if issued without substantial compliance with this chapter by the Department of Community Development and the developer.

14.75.300 Severability. Should any section, subsection, paragraph, sentence, clause or phrase of this chapter be declared unconstitutional or invalid for any reason, such decision shall not affect the validity of the remaining portion of this chapter.

Chapter 16.82
CLEARING AND GRADING

Sections:

16.82.010 Purpose.
16.82.020 Definitions.
16.82.030 Administration.
16.82.040 Hazards.
16.82.050 Clearing and grading permit required - Exceptions.
16.82.055 Applications - Complete applications.
16.82.060 Permit requirements.
16.82.090 Liability insurance required - Exception.
16.82.100 Operating conditions and standards of performance.
16.82.110 Land restoration.
16.82.120 Shorelines.
16.82.130 Enforcement.
16.82.140 Not Used.
16.82.150 Clearing Standards.
16.82.160 Not Used
16.82.170 Not used.

16.82.010 Purpose. A.This chapter is intended to regulate clearing and removal of vegetation, excavation, grading and earthwork construction including cuts and fills, gravel pits and dumping, operations within the City of Sammamish in order to protect public health, safety and welfare by:

1. Minimizing adverse stormwater impacts generated by the removal of vegetation and alteration of landforms;
2. Protecting water quality from the adverse impacts associated with erosion and sedimentation;
3. Minimizing aquatic and terrestrial wildlife habitat loss caused by the removal of vegetation;
4. Protecting sensitive areas from adverse clearing and grading activities;
5. Not Used.
6. Not used.
7. Preventing damage to property and harm to persons caused by excavations and fills;
8. Establishing administrative procedures for the issuance of permits, approval of plans, and inspection of clearing and grading operations; and
9. Providing penalties for the violation of this chapter.

B.This chapter establishes the administrative procedure for issuance of permits, provides for approval of plans and inspection of clearing and grading operations, and provides for penalties for the violation of this chapter.

16.82.020 Definitions. Certain words and phrases used in this chapter, unless otherwise clearly indicated by their context, mean as follows:

A."Applicant" is a property owner or a public agency or public or private utility which owns a right-of-way or other easement or has been adjudicated the right to such an easement pursuant to RCW 8.12.090, or any

person or entity designated or named in writing by the property or easement owner to be the applicant, in an application for a development proposal, permit or approval.

B."Bench" is a relatively level step excavated or constructed on the face of a graded slope surface for drainage and maintenance purposes.

C."Berm" is a mound or raised area used for the purpose of screening a site or operation.

D."Civil engineer" means a professional engineer registered in the state of Washington to practice in the field of civil works.

E."Clearing" means the cutting or removal of vegetation or other organic plant material by physical, mechanical, chemical or any other means.

F. "Compaction" is the densification of a fill by mechanical means.

G."Cutting" is the severing of the main trunk or stems from close to or at the soil surface or at a point up to 25% of the total vegetation height.

H."Director" means the DDirector of the Department of Community Development.

I. "Earth material" is any rock, natural soil or any combination thereof.

J. "Erosion" is the wearing away of the ground surface as the result of the movement of wind, water and/or ice.

K."Excavation" is the removal of earth material.

L."Fill" is a deposit of earth material placed by mechanical means.

M. "Grade" means the elevation of the ground surface.

1. "Existing grade" is the grade prior to grading.

2. "Rough grade" is the stage at which the grade approximately conforms to the approved plan as required in Section 16.82.060.

3. "Finish grade" is the final grade of the site which conforms to the approved plan as required in Section 16.82.060.

N."Grading" is any excavating, filling, removing of the duff layer, or combination thereof.

O."Grading and clearing permit" means the permit required by this chapter for grading and clearing activities, including temporary permits.

P. "Reclamation" means the final grading and land restoration of a site.

Q."Shorelines" means those lands defined as shorelines in the state Shorelines Management Act of 1971.

R."Site" is any lot or parcel of land or contiguous combination thereof where projects covered by this chapter are performed or permitted where a public street or way may intervene.

S. "Slope" is an inclined ground surface, the inclination of which is expressed as a ratio of vertical distance to horizontal distance.

T."Soil engineer" means a person who has earned a degree in geology from an accredited college or university, or a person who has equivalent educational training and has experience as a practicing geologist.

U."Structure" is that which is built or constructed, an edifice or building of any kind, or any piece of work artificially built up or composed of parts jointed together in some definite manner.

V."Terrace" is a relatively level step excavated or constructed on the face of a graded slope surface for drainage and maintenance purposes.

W. "Tidelands" means that portion of the land which is covered and uncovered by the ebb and flood tide.

X."Tree" is a large woody perennial plant usually with a single main stem or trunk and generally over twelve feet tall at maturity.

Y."Understory" is the vegetation layer of a forest that includes shrubs, herbs, grasses, and grass-like plants, but excludes native trees.

Z. "Vegetation" means any and all organic plant life growing at, below, or above the soil surface.

16.82.030 Administration. The DDirector is authorized to enforce the provisions of this chapter.

A.INSPECTIONS. The DDirector is authorized to make such inspections and take such actions as may be required to enforce the provisions of this chapter.

B.RIGHT OF ENTRY. Whenever necessary to make an inspection to enforce any of the provisions of this chapter, or whenever the DDirector has reasonable cause to believe that any land, building, structure, premises, or portion thereof is being used in violation of this chapter, the DDirector may enter such land, building, structure, premises, or portion thereof at all reasonable times to inspect the same or perform any duty imposed upon the DDirector by this chapter; provided, that if such building, land, structure, premises or portion thereof is occupied, he shall first present proper credentials and demand entry; and if such land, building, structure, premises, or portion thereof be unoccupied, he shall first make a reasonable effort to locate the owner or other persons having charge or control of the land, building, structure, premises, or portion thereof and demand entry.

No owner or occupant or any other person having charge, care or control of any building, land, structure, premises, or portion thereof shall fail or neglect, after proper demand, to promptly permit entry thereon by the DDirector for the purpose of inspection and examination pursuant to this chapter. Any person violating this subsection is guilty of a misdemeanor.

16.82.040 Hazards. Whenever the DDirector determines that an existing site, as a result of clearing or grading, excavation, embankment, or fill has become a hazard to life and limb, or endangers property, or adversely affects the safety, use or stability of a public way or drainage channel, the owner of the property upon which the clearing, grading, excavation or fill is located, or other person or agent in control of said property, upon receipt of notice in writing from the DirectorDirector, shall within the period specified therein restore the site affected by such clearing or grading or repair or eliminate such excavation or embankment or fill so as to eliminate the hazard and be in conformance with the requirements of this chapter.

16.82.050 Clearing and grading permit required - Exceptions. A. No person shall do any clearing or grading without first having obtained a clearing and grading permit from the DDirector except for the following:

1. An on site excavation or fill for basements and footings of a building, retaining wall, parking lot, or other structure authorized by a valid building permit. This shall not exempt any fill made with the material from such excavation nor exempt any excavation having an unsupported height greater than five feet after the completion of such structure;

2. Not Used.

3. Maintenance of existing driveways or private access roads within their existing road prisms, provided that the performance and restoration requirements of this chapter are met and best management practices are utilized to protect water quality.

4. Any grading within a publicly owned road right-of-way;

5. Clearing or grading by a public agency for the following routine maintenance activities:

a. Roadside ditch cleaning provided the ditch does not contain salmonids;

b. Pavement maintenance;

c. Normal grading of gravel shoulders;

d. Maintenance of culverts;

e. Maintenance of flood control or other approved surface water management facilities;

f. Routine clearing within road right-of-way.

6. DirectorNot Used.

7. ISDCNot Used.

8. Cemetery graves; provided that this exception does not apply except for routine maintenance if the clearing or grading is within a sensitive area as regulated in ISDCISDC Chapter 21A.24;

9. ISDCISDCISDCNot Used.

10. ISDCISDCISDCNot Used.

11. ISDCISDCISDCNot Used.

12. Minor stream restoration projects for fish habitat enhancement by a public agency, utility or tribe as set out in ISDCISDC 21A.24.

13. Not Used.

14. Not Used.

15. Any clearing or grading which has been approved by the DDirector as part of a Commercial Site Development permit and for which a financial guarantee has been posted.

16. ISDCISDCISDCISDCNot Used.

17. Within sensitive areas, as regulated in ISDCISDC Chapter 21A.24, the following activities are exempt from the clearing requirements of this chapter and no permit shall be required;

a. Normal and routine maintenance of existing lawns and landscaping subject to the limitations on the use of pesticides in sensitive areas as set out in ISDCISDC Chapter 21A.24.

b. ISDCNot Used.

c. Emergency tree removal to prevent imminent danger or hazard to persons or property.

d. Normal and routine horticultural activities associated with commercial orchards, nurseries, or Christmas tree farms subject to the limitations on the use of pesticides in sensitive areas as set out in ISDCISDC Chapter 21A.24. This does not include clearing or grading in order to develop or expand such activities.

e. Normal and routine maintenance of existing public parks and private and public golf courses. This does not include clearing or grading in order to develop or expand such activities in sensitive areas. For the purpose of this subsection, a park is defined as: any real property managed for public use which has been previously maintained as a park or has been developed as a park pursuant to a properly issued permit.

f. Removal of noxious weeds from steep slope hazard areas and the buffers of streams and wetlands subject to the limitations on the use of pesticides in sensitive areas as set out in ISDCISDC Chapter 21A.24.

g. Pruning and limbing of vegetation for maintenance of above ground electrical and telecommunication facilities; provided that the clearing is consistent with the electric, natural gas, cable communication and telephone utility exemption in sensitive areas as regulated in ISDCISDC Chapter 21A.24.

h. Not Used.

18. ISDCISDCISDCNot Used.
19. ISDCISDCISDCNot Used.

B. DirectorDirectorISDCNot Used.

16.82.055 Applications - Complete applications. A. For the purposes of determining the application of time periods and procedures adopted by this chapter, applications for permits authorized by Chapter 16.82 shall be considered complete as of the date of submittal upon determination by the department that the materials submitted contain the following:

1. For clearing and grading permits:
   a. A legal description of the property,
   b. A 1:1000 scale vicinity map with a north arrow,
   c. Grading plans including;
      (1) Horizontal and vertical scale,
      (2) Size and location of existing improvements within 50 feet of the project, indicating which will remain and which will be removed.
      (3) Existing and proposed contours at maximum five foot intervals, and extending for 100 feet beyond the project edge,
      (4) At least two cross-sections, one in each direction, showing existing and proposed contours and horizontal and vertical scales, and
      (5) Temporary and permanent erosion-sediment control facilities,
   d. The following plans must be stamped and signed by a registered civil engineer, licensed to practice in the State of Washington,
      (1) Permanent drainage facilities,
      (2) Structures to be built or construction proposed in land slide hazard areas, and
      (3) Proposed construction or placement of a structure.
2. A completed environmental checklist, if required by ISDCISDC chapter 20.44, State Environmental Policy Act Procedures;
3. Satisfaction of all requirements for grading permits under

ISDCISDC16.82.060.

B. Applications found to contain material errors shall not be deemed complete until such material errors are corrected.

C. The DDirector may waive specific submittal requirements determined to be unnecessary for review of an application.

16.82.060 Permit requirements. Except as exempted in ISDCISDC 16.82.050, no person shall do any clearing or grading without first obtaining a clearing and grading permit from the DDirector. A separate permit shall be required for each site and may cover both excavations and fills.

A. Application. To obtain a permit, the applicant shall first file an application therefor in writing on a form furnished for that purpose. The DDirector shall prescribe the form by which application is made. No application shall be accepted unless it is completed consistent with the requirements of this chapter and the permit process and procedures chapter of ISDCISDC Title 20. In addition to the requirements of ISDCISDC 20.20.040 every application shall:

1. Identify and describe the work to be covered by the permit for which application is made;

2. Describe the land on which the proposed work is to be done, by lot, block, tract and house and street address, or similar description that will readily identify and definitely locate the proposed site;

3. Identify and describe those sensitive areas as defined in ISDCISDC chapter 21A.24 on or adjacent to the site;

4. Indicate the estimated quantities of work involved;

5. Identify any clearing restrictions contained in ISDCISDC 16.82.150 wildlife habitat corridors pursuant to ISDCISDCchapter 21A.14, critical drainage areas established by administrative rule or property-specific development standards pursuant to ISDCISDC chapter 21A.38;

6. Be accompanied by plans and specifications as required in subsections B. and C.;

7. Designate who the applicant is, on a form prescribed by the Department, except that the application may be accepted and reviewed without meeting this requirement when a public agency or public or private utility is applying for a permit for property on which the agency or utility does not own an easement or right-of-way and the following three requirements are met:

a. the name of the agency or public or private utility is shown on the application as the applicant;

b. the agency or public or private utility includes in the complete application an affidavit declaring that notice of the pending application has been given to all owners of property to which the application applies, on a form provided by the department; and

c. the form designating the applicant is submitted to the department prior to permit issuance; and

8. Give such other information as may be required by the DDirector.

B. Plans and specifications. When required by the DDirector, each application for a grading permit shall be accompanied by six sets of plans and specifications and other supporting data as may be required. The plans and specifications shall be prepared and signed by a civil engineer or landscape architect registered to practice in the state of Washington when required by the DDirector; provided, the DDirector may require additional studies prepared by a qualified soils specialist. If the plans and specifications are returned as a result of permit denial or any other reason, they shall be returned to the applicant.

C. Information on plans and in specifications. Plans shall be drawn to an engineer's scale upon substantial paper or cloth and shall be of sufficient clarity to indicate the nature and extent of the work proposed and show in detail that they will conform to the provisions of this chapter and all other relevant laws, rules, regulations and standards. The first sheet of each set of plans shall give the location of the work and the name and address of the owner and the person by whom they were prepared. The plans shall include the following minimum information:

1. General vicinity of the proposed site;

2. Property limits and accurate contours of existing ground and details of terrain and area drainage;

3. Limiting dimensions, elevations or finished contours to be achieved by the grading, and proposed drainage channels and related construction;

4. Location of all proposed cleared areas;

5. Location of any open space tracts or conservation easements if required pursuant to

a. ISDCISDC 16.82.150,

b. ISDCISDC chapter 21A.14,

c. critical drainage area, or

d. property-specific development standards pursuant to ISDCISDC chapter 21A.38;

6. Calculations of the total proposed area cleared on site as a percentage of the total site area;

7. Detailed plans of all surface and subsurface drainage devices, walls, cribbing, dams, berms, settling ponds and other protective devices to be constructed with or as a part of the proposed work, together with the maps showing the drainage area and the estimated runoff of the area served by any drains;

8. A determination of whether drainage review applies to the project pursuant to King County Code. chapter 9.04, and, if applicable, all drainage plans and documentation consistent with King County Surface Water Design Manual requirements;

9. Location of any buildings or structures on the property where the work is to be performed and the location of any buildings or structures on land of adjacent owners which are within fifty feet of the property or which may be affected by the proposed grading operations;

10. Landscape and rehabilitation plan as required by ISDCISDC 16.82.110;

11. Other information as may be required by the DDirector; and

12. If the clearing or grading is proposed to take place in or adjacent to a sensitive area as regulated in ISDCISDC chapter 21A.24, provide information as required by that chapter.

D. Granting of permits. 1. The DDirector shall determine if the proposed grading will adversely affect the character of the site for present lawful uses or with the future development of the site and adjacent properties for building or other purposes as indicated by the Interim Comprehensive Plan, the shoreline master program, and the zoning code.

2. After an application has been filed and reviewed, the DDirector shall also ascertain whether such grading work complies with the other provisions of this chapter. If the application and plans so comply, or if they are corrected or amended so as to comply, the DDirector may issue to the applicant a grading permit. A grading permit shall be valid for the number of days stated in the permit but in no case shall the period be more than two years; provided, that when operating conditions have been met, the permit may be renewed every two years, or less if a shorter approval and/or renewal period is specified by the DDirector.

3. No grading permit shall be issued until approved by federal, state

and local agencies having jurisdiction by laws or regulations.

4. Upon approval of the application and issuance of the grading permit, no work shall be done that is not provided for in the permit. The DDirector is authorized to inspect the premises at any reasonable time to determine if the work is in accordance with the permit application and plans.

5. The permits from the DDirector shall be required regardless of any permits issued by any other department of City government or any other governmental agency who may be interested in certain aspects of the proposed work. Where work for which a permit is required by this chapter is started or proceeded with prior to obtaining the permit, the violator shall be subject to such civil penalties as provided in ISDCISDC chapter 23.04. However, the payment of such civil penalties shall not relieve any persons from fully complying with the requirements of this chapter in the execution of the work nor from any other penalties prescribed thereon.

16.82.090 Liability insurance required - Exception. The permittee shall maintain a liability policy in the amount of one hundred thousand dollars per individual, three hundred thousand dollars per occurrence, and fifty thousand dollars property damage, and shall name the City of Sammamish as an additional insured. EXCEPTION: Liability insurance requirements may be waived for projects involving less than ten thousand cubic yards. Liability insurance shall not be required of other public agencies.

16.82.100 Operating conditions and standards of performance.

A. Any activity that will clear, grade or otherwise disturb the site, whether requiring a clearing or grading permit or not, shall provide erosion and sediment control (ESC) that prevents, to the maximum extent possible, the transport of sediment from the site to drainage facilities, water resources and adjacent properties. Erosion and sediment controls shall be applied as specified by the temporary ESC measures and performance criteria and implementation requirements in the City's erosion and sediment control standards. B. Cuts and fills shall conform to the following provisions unless otherwise approved by the Director.

1. Slope. No slope of cut and fill surfaces shall be steeper than is safe for the intended use and shall not exceed two horizontal to one vertical, unless otherwise approved by the DDirector.

2. Erosion control. All disturbed areas including faces of cuts and fill slopes shall be prepared and maintained to control erosion in compliance with subsection A.

3. Preparation of ground. The ground surface shall be prepared to receive fill by removing unsuitable material such as concrete slabs, tree stumps, brush and car bodies.

4. Fill material. Except in an approved sanitary landfill, only earth materials which have no rock or similar irreducible material with a maximum dimension greater than eighteen inches shall be used.

5. Drainage. Provisions shall be made to:

a. prevent any surface water or seepage from damaging the cut face of any excavations or the sloping face of a fill;

b. carry any surface waters that are or might be concentrated as a result of a fill or excavation to a natural watercourse, or by other means approved by the City Engineer;

6. Bench/terrace. Benches, if required, at least ten feet in width shall be back-sloped and shall be established at not more than twenty-five feet vertical intervals to control surface drainage and debris. Swales or ditches on benches shall have a maximum gradient of five percent.

7. Access roads - maintenance. Access roads to grading sites shall be maintained and located to the satisfaction of the City Engineer to minimize problems of dust, mud and traffic circulation.

8. Access roads - gate. Access roads to grading sites shall be controlled by a gate when required by the DDirector.

9. Warning signs. Signs warning of hazardous conditions, if such exist, shall be affixed at locations as required by the DDirector.

10. Fencing. Fencing, where required by the DDirectorDirector, to protect life, limb and property, shall be installed with lockable gates which must be closed and locked when not working the site. The fence must be no less than five feet in height and the fence material shall have no horizontal opening larger than two inches.

11. Setbacks. The tops and the toes of cut and fill slopes shall be set back from property boundaries as far as necessary for safety of the adjacent properties and to prevent damage resulting from water runoff or erosion of the slopes.

The tops and the toes of cut and fill slopes shall be set back from structures as far as is necessary for adequacy of foundation support and to prevent damage as a result of water runoff or erosion of the slopes.

Slopes and setbacks shall be determined by the Director.

12. Excavations to water-producing depth. All excavations must either be made to a water-producing depth or grade to permit natural drainage. The excavations made to a water-producing depth shall be reclaimed in the following manner:

a. the depth of the excavations must not be less than two feet measured below the low-water mark.

b. all banks shall be sloped to the water line no steeper than three feet horizontal to one foot vertical.

c. all banks shall be sloped from the low-water line into the pond or lake with a minimum slope of three feet horizontal to one foot vertical to a distance of at least twenty-five feet.

d. in no event shall the term water-producing depth as herein used be construed to allow stagnant or standing water to collect or remain in the excavation.

e. the intent of this provision is to allow reclamation of the land which will result in the establishment of a lake of sufficient area and depth of water to be useful for residential or recreational purposes.

13. Hours of operation. Hours of operation, unless otherwise authorized by the

Director, shall be between seven a.m. and seven p.m. 16.82.110 Not Used.

16.82.120 Shorelines. A. Any fill placed upon land adjacent to or beneath any stream or water body shall be contained and placed so as to prevent adverse effect upon other lands.

B. No permit required by this chapter shall be issued for grading upon the shorelines until approved by the appropriate federal, state and local authority.

C. For grading which requires a shoreline management substantial development permit, the conditions of the shoreline management substantial development permit shall be incorporated into the conditions of any permit issued pursuant to this chapter and shall be subject to the inspection and enforcement procedures authorized by this chapter.

16.82.130 Enforcement. The Director of the Community Development is authorized to enforce the provisions of this chapter, the ordinances and resolutions codified in it, and any rules and regulations promulgated thereunder pursuant to the enforcement and penalty provisions of Title 23.

If clearing inconsistent with the purposes and requirements of this chapter has occurred on a site, the City shall not accept or grant any development permits or approvals for the site unless the applicant adequately restores the site. The Director shall require appropriate restoration of the site under an approved restoration plan which shall include a time schedule for compliance if significant resource damage has or may occur. If restoration has not been completed within the time established by the department, the Director shall order restoration using funds authorized by the City Council for this purpose and seek restitution from the property owner through liens or other available legal methods.

16.82.140 Not Used.

16.82.150 Clearing standards. A. For clearing and grading permits issued under this chapter, the current clearing standards contained in this section and in the following regulations shall apply:

1. The Sensitive Areas Code, ISDC chapter 21A.24, and its adopted administrative rules;

2. Property-specific development standards pursuant to ISDCISDC chapter 21A.38;

3. Critical drainage area designations identified by adopted administrative rule; and

4. Wildlife habitat corridors pursuant to ISDC chapter 21A.14.

B. Within sensitive areas designated pursuant to ISDC chapter 21A.24, uses shall be limited to those specified in that chapter. Within any other areas subject to clearing restrictions referenced or contained in this section, the following uses are allowed under a clearing permit:

1. Not Used.

2. Passive recreation uses and related facilities, including pedestrian and bicycle trails, nature viewing areas, fishing and camping areas, and other similar uses that do not require permanent structures, provided that cleared areas and/or areas of compacted soils associated with these uses and facilities do not exceed eight percent of the area of the tract or easement. Within wildlife habitat corridors, trail widths shall be the minimum allowed under adopted trail standards and no other recreation uses shall be permitted in the one hundred fifty foot minimum width of the corridor;

3. Utilities and utility easements, including surface water facilities, provided that such uses are within or adjacent to existing road or utility easements whenever possible. Within wildlife habitat corridors, existing or multiple utility uses within established easements shall be allowed within the one hundred fifty foot minimum width of the corridor. Development of new utility corridors shall be allowed within wildlife habitat corridors only when multiple uses of existing easements are not feasible and the utility corridors are sited and developed using county-approved best management practices to minimize disturbance; and

4. Removal of dangerous and or damaged trees.

C.
space.

D.Construction projects can be a significant contributor of pollution to streams and wetlands. Therefore, from October 1 through March 31:

1. Clearing and grading shall only be permitted if shown to the satisfaction of the Director that silt-laden runoff exceeding standards in the King County Surface Water Design Manual will be prevented from leaving the construction site through a combination of the following:

a. site conditions including vegetative coverage, slope, soil type and proximity to receiving waters;

b. limitations on activities and the extent of disturbed areas; and

c. proposed erosion and sedimentation control measures.

2. The Director shall set forth in writing the basis for approval or denial of clearing or grading during this period.

3. Clearing and grading will be allowed only if there is installation and maintenance of an erosion and sedimentation control plan approved by the department which shall define any limits on clearing and grading or specific erosion and sediment control measures required during this period. Alternate best management practices may be approved or required on-site by the inspector.

4. If, during the course of construction, silt-laden runoff exceeding standards in the King County Surface Water Design Manual leaves the construction site or if clearing and grading limits or erosion and sediment control measures shown in the approved plan are not maintained, a notice of violation shall be issued.

5. If the erosion and sediment control problem defined in the violation is not adequately repaired within twenty-four hours of the notice of violation, then a notice and order may be issued by the inspector to install adequate erosion and sediment control measures to stop silt-laden runoff from leaving the site. The notice and order may also require the contractor to discontinue any further clearing or grading, except for erosion and sediment control maintenance and repair, until the following March 31.

6. The following activities are exempt from the seasonal clearing and grading requirements of this subsection:

a. Routine maintenance and necessary repair of erosion and sediment control facilities;

b. Routine maintenance of public facilities or existing utility structures as provided by ISDC 21A.24.050B;

c. Activities where there is one hundred percent infiltration of surface water runoff within the site in approved and installed erosion and sedimentation control facilities;

d. Typical landscaping activities of existing single family residences that do not require a permit; and

e. Not Used.

f. Not Used.

g. Public agency response to emergencies that threaten the public health, safety and welfare.

16.82.160 Not Used.

16.82.170 Not Used.

Chapter 19.01
GENERAL PROVISIONS

Sections:

19.01.010 Relationship to comprehensive plan and growth management act.
19.01.020 Financial guarantees authorized.

19.01.010 Relationship to comprehensive plan and growth management act. This title is hereby enacted to be consistent with and implement the Interim Comprehensive Plan in accordance with RCW 36.70A.).

19.01.020 Financial guarantees authorized. Notwithstanding any other provision of Title 19, the Director is authorized to require all applicants issued permits or approvals under the provisions of the title to post financial guarantees consistent with the provisions of Title 27A.

Chapter 19.04
DEFINITIONS

Sections:

19.04.010 Tense.
19.04.020 Singular words.
19.04.030 Shall.
19.04.040 Access panhandle.
19.04.050 Access tract.
19.04.060 Acres, five.
19.04.070 Acres, twenty.
19.04.080 Alley.
19.04.082 Applicant.
19.04.084 Binding site plan.
19.04.088 Bond.
19.04.090 Buffer strip.
19.04.100 Crosswalkway.
19.04.110 Cul-de-sac.
19.04.112 Department.
19.04.115 Development engineer.
19.04.117 Director.
19.04.120 Easement.
19.04.130 Final plat.
19.04.140 Improvements.
19.04.170 Not Used.
19.04.180 Not Used.
19.04.190 Not Used.
19.04.200 Owner.
19.04.210 Ownership interest.
19.04.220 Not Used.
19.04.225 Person.
19.04.230 Plat, preliminary.
19.04.240 Not Used.
19.04.250 Not Used.
19.04.260 Private road.
19.04.280 Not Used.
19.04.290 Short subdivision.
19.04.300 Street.
19.04.310 Not Used.
19.04.320 Subdivision.
19.04.330 Active recreation.
19.04.340 Dedication.
19.04.360 Homeowners' association.
19.04.370 Reservation.
19.04.380 Not Used.
19.04.390 Neighborhood park.
19.04.400 Acres ten.
19.04.410 Alteration.
19.04.420 Separate lot.
19.04.430 Land surveyor.
19.04.440 Short plat, preliminary.
19.04.450 Short plat, final.
19.04.460 Tract.
19.04.470 Material error.

19.04.010 Tense. Words used in the present tense include the future.
19.04.020 Singular words. Words in the singular number include the plural and words in the plural include the singular.
19.04.030 Shall. "Shall" is mandatory and not directory.

19.04.040 Access panhandle. "Access panhandle" is a strip of land having a width narrower than that of the lot, tract, or parcel to be served thereby and designed for the purpose of providing access to a lot, tract, or parcel.19.04.050 Access tract. "Access tract" is a piece of real property with dimensions less than the minimum zone requirement, jointly owned by the fee owners of more than one lot which abuts the tract and which is intended to provide ingress, egress or utility access.

19.04.060 Acres, five. "Five acres" means five acres or one one-hundred-twenty-eighth of the section in which the property is located, including, in addition, up to thirty feet, but no more than one-half of the right-of-way of any perimeter public street.

19.04.070 Acres, twenty. "Twenty acres" means twenty acres or one one-thirty-second of the section in which the property is located, including, in addition, up to thirty feet, but not more than one-half of any perimeter public street. (Ord. 3113 § 2(2)(i), 1977).

19.04.080 Alley. An "alley" is a strip of land dedicated to public use, less than twenty-one feet wide, between property lines, which provides access to adjacent properties.
19.04.082 Applicant. "Applicant" means a property owner, or any person or entity designated or named in writing by the property owner to be the applicant, in an application for a development proposal, permit or approval.
19.04.084 Binding site plan. A "binding site plan" is a plan drawn to scale processed in accordance with the provisions of this title and RCW 58.17, which:
A.Identifies and shows the areas and locations of all streets, roads, improvements, utilities, open spaces, critical areas, parking areas, landscaped areas, surveyed topography, water bodies and drainage features and building envelopes;
B.Contains inscriptions or attachments setting forth such appropriate limitations and conditions for the use of the land as are established by the Director or the Hearing Examiner;
C. Contains provisions requiring any development or division of land to be in conformity with the approved site plan.

19.04.088 Bond. "Bond" means a surety bond, cash deposit, escrow account assignment of savings, irrevocable letter of credit or other means acceptable to, or required by, the manager to guarantee work is in compliance with all applicable county requirements.

19.04.090 Buffer strip. A "buffer strip" is an area or strip of land, located and planted with trees and shrubs to provide a screen between residential areas and business, commercial and industrial areas. Parks, playgrounds and the sites of public buildings are sometimes used as buffers.
19.04.100 Crosswalkway. A "crosswalkway" is a right-of-way dedicated to public use, ten feet or more in width, which cuts across a block to facilitate pedestrian access to

adjacent streets and properties. 19.04.110 Cul-de-sac. A "cul-de-sac" is a short street having one end open to traffic and being permanently terminated by a vehicle turnaround.

19.04.112 Department. "Department" means the Department of Community Development. 19.04.115Development engineer. "Development engineer" means the Department employee or consultant authorized to oversee the review, conditioning, inspection and acceptance of right-of-way use permits, road and drainage projects constructed pursuant to permits administered by the Department. The development engineer may be the City Engineer. The development engineer shall be a professional civil engineer registered and licensed under the laws of the state of Washington.

19.04.117 Director. "Director" means the Director of the Department of Community Development.

19.04.120 Easement. An "easement" is a grant by the property owner of the use of a strip of land by the public, corporation or persons for specific purposes.

19.04.130 Final plat. A "final plat" is a map or chart of a subdivision of land which has been accurately surveyed, and such survey marked on the ground so that streets, alleys, blocks, lots and other divisions thereof can be identified, and which has been approved in accordance with this title. 19.04.140 Improvements. "Improvements" refers to streets, with or without curbs or gutters, sidewalks, crosswalks, water mains, sanitary and storm sewers, street trees and other appropriate items. 19.04.170 Not Used.

19.04.180 Not Used.

19.04.190 Not Used.

19.04.200 Owner. An "owner" is a natural person, firm, association, partnership, private corporation, public or quasi-public corporation, or combination of any of them.

19.04.210 Ownership interest. "Ownership interest" means having property rights as a fee owner, contract purchaser, mortgagee, or deed of trust beneficiary or grantor.

19.04.220

19.04.225 Person. "Person" means and includes an individual, firm, copartnership, association or corporation, governmental agency or political subdivision.

19.04.230 Plat, preliminary. A "preliminary plat" is an accurate drawing of a proposed subdivision showing the general layout of streets and alleys, lots, tracts, and other elements of a subdivision consistent with the requirements of this title and RCW 58.17, Plats-Subdivisions-Dedications. The preliminary plat shall be the basis for the approval or disapproval of the subdivision's general layout. 19.04.240 Not Used.

19.04.250 Not Used.

19.04.260 Private road. A "private road" is a private vehicular access provided for by an access tract, easement or other legal means, which serves two or more lots.

19.04.280 Not Used.

19.04.290 Short subdivision. "Short subdivision" is the administrative approval of the division or redivision of land into nineor fewer lots for the purpose of sale or transfer of ownership pursuant to ISDC 19.26. A short subdivision also may include any number of tracts for ingress, egress, utilities, open space preservation, or other approved public purpose.

19.04.300 Street. A "street" is a right-of-way dedicated to the public use, which provides vehicular and pedestrian access to adjacent properties.

19.04.310 Not Used.

19.04.320 Subdivision. "Subdivision" is the division or redivision of land into two or more lots for the purpose of sale, lease or transfer of ownership, except as provided by the short subdivision of two to nine lots.

19.04.330 Active recreation. "Active recreation" shall mean and include all outdoor recreational activities which involve field and court games, such as, but not limited to football, soccer, rugby, tennis, baseball, and softball. 19.04.340 Dedication. "Dedication" shall mean a conveyance of land to the City of Sammamish where the owner of the land transfers it to some public use through a clause or covenant in a deed or some other instrument of conveyance or on a duly filed plat.

19.04.360 Homeowners' association. "Homeowners' association" shall mean any combination or grouping of persons or any association, corporation or other entity which represents homeowners residing in a short subdivision or subdivision; provided, that a homeowners' association need not have any official status as a separate legal entity under the laws of the State of Washington.

19.04.370 Reservation. "Reservation" shall mean the act by which the grantor of land creates and reserves to a homeowners' association, through a clause or covenant in a deed or some other instrument of conveyance or on a duly filed plat map, some right or interest which had no previous existence as such.

19.04.380 Not used.

19.04.390 Neighborhood park. A small park of 5 to 10 acres in size which is designed to serve the open space and recreational needs of the immediately surrounding residents within a radius of approximately one-half to one mile.

19.04.400 Acres ten. "Ten acres" means ten acres or one-sixty-fourth of the section in which the property is located, including, in addition, up to thirty feet, but no more than one-half of the right-of-way of any perimeter public street.

19.04.410 Alteration. "Alteration" means the modification of a previously recorded plat or short plat, or any portion thereof, which results in the revision of interior lot lines, the addition of new lots or more land, deletion of existing lots or the removal of plat or lot restrictions or dedications.

19.04.420 Separate lot. "Separate lot" means a physically separate and distinct parcel of property, which has been created through one of the following processes:

A.The lot was created in compliance with the subdivision or short subdivision laws in effect at the time of creation of the lot.

B.The lot has been recognized as a lot pursuant to ISDC 19.08.114, lots created in violation of this title; or

C.The lot is a portion of a lot created through the processes cited in subsections A. or B. of this section that is separated from the remainder of the lot by one of the following:

1. A public road right-of-way; or
2. Shorelines as defined in ISDC 25.08.490; or
3. Another separate lot, or a tract as defined in ISDC 19.04.460, including railroad or public utility owned rights-of-way, publicly owned property, or other parcels recognized by the department pursuant to ISDC 19.08.010.

19.04.430 Land surveyor. A "land surveyor" is an individual licensed as a land surveyor pursuant to RCW 18.43, Professional Engineers Registration Act.

19.04.440 Short plat, preliminary. A "preliminary short plat" is a map indicating a proposed short subdivision of land.

19.04.450 Short plat, final. A "final short plat" is an accurate map of a short subdivision.

19.04.460 Tract. A "tract" is land reserved for special uses such as open space, surface water retention, utilities, or access. Tracts are not counted as lots nor considered as residential building sites.

19.04.470 Material error. "Material error" means an error in fact or an omission of substantive information in preliminary subdivision or short subdivision applications, or supplementary studies, supplied to the county, which would constitute the basis for a decision.

Chapter 19.08
GENERAL PRINCIPLES OF ACCEPTABILITY[1]

Sections:

19.08.010 Applicability.
19.08.016 Applications - Modifications to proposal.
19.08.020 Conformance to code.
19.08.030 Not Used.
19.08.040 Conformance of streets to suggested plan.
19.08.050 Interest of public welfare.
19.08.060 Not Used.
19.08.070 Frontage on high volume trafficways.
19.08.080 Not Used.
19.08.110 Not Used.
19.08.112 Boundary line adjustments.
19.08.113 Boundary line correction.
19.08.114 Lots created in violation of this title.
19.08.120 Connection of streets with highway.
19.08.130 Not Used.
19.08.140 Not Used.
19.08.150 Not Used.
19.08.160 New streets and rights-of-way.
19.08.170 Not Used.
19.08.180 Parks, playgrounds and recreation spaces.
19.08.210 Conformance to zoning code.
19.08.220 Variances and exceptions.
19.08.230 Future use of streets - Intersection angles and grades.
19.08.290 Severability.

19.08.010 Applicability. This title shall apply to all divisions of land into two or more lots or tracts, for the purpose of sale, lease or transfer of ownership. Except as provided herein the provisions of this title shall not apply to:

A.Cemeteries and other burial plots while used for that purpose.

B.Any division of land into lots or tracts each one of which is twenty acres or larger, or in the case of zone classifications requiring a minimum lot area greater than twenty acres, each of which complies with the lot area requirements of that classification. Once the original parcel is subdivided into its maximum number of lots or tracts allowed under this section, no additional subdivision of these lots or tracts shall be done except through the subdivision or short subdivision process.

C.Any division of land made by testamentary provisions or the laws of descent. Any development on lots created by this means must comply with all applicable development regulations, including zoning.

D.Any division of land into lots or tracts consistent with RCW 58.17.040, Section 7 for which a residential condominium binding site plan has been recorded in accordance with the provisions set forth in ISDC 19.34, Residential Condominium Binding Site Plan.

[1] [Deposit of bond pending improvement, see Chapter 19.16.]

E. Any transfer of land to a public body, or any division of land solely for the installation of electric power, telephone, water supply, sewer service or other utility facilities of a similar or related nature provided that no more than four lots are created and provided further that any remaining lot or lots which are not consistent with City of Sammamish zoning, access, or health requirements shall not be considered as building sites by the City.

F. A division made for the purpose of alteration by adjusting boundary lines, between platted or unplatted lots or both, which does not create any additional lot, tract, parcel, site, or division nor create any additional lot, tract, parcel, site, or division which contains insufficient area and dimension to meet minimum requirements for width and area for a building site, provided the adjustment is reviewed and approved as set forth in ISDC 19.08.112 or 19.08.113.

G. Any conveyance of land by a partial fulfillment deed pursuant to a real estate contract; provided that the entire lot within the original real estate contract shall be recognized as a single legal building site until the property is subdivided in compliance with this title, and that there shall be no retransfer of any lot created by partial fulfillment deed without compliance with this title.

H. Any division of land for the purpose of lease when no residential structures other than mobile homes are permitted to be placed upon the land and for which a binding site plan for the use of the land as a mobile home park has been approved by the Director in accordance with the provisions of ISDC 21A.14.

I. Divisions of land by binding site plan into lots or tracts classified for industrial or commercial use pursuant to ISDC 19.33.

19.08.016 Applications - Modifications to proposal. A. Modifications required by the City to a pending application shall not be deemed a new application.

B. An applicant-requested modification occurring either before or after issuance of the permit shall be deemed a new application for the purpose of establishing time periods when such modification would result in a substantial increase in a project's impacts as determined by the Department. Such substantially increased impacts may include increases in residential density or traffic generation or a greater than 10 percent increase in building square footage.

19.08.020 Conformance to code. The subdivision shall conform to this chapter and Chapter 19.12.

19.08.030 Not Used.

19.08.040 Conformance of streets to approved plan. If a preliminary plat for the area has been approved by the Hearing Examiner, the street layout shall be in general conformance thereto.

19.08.050 Interest of public welfare. The proposed subdivision and its ultimate use shall be in the best interests of the public welfare and the neighborhood development of the area and the applicant shall present evidence to this effect when requested by the Hearing Examiner. 19.08.060Not Used.

19.08.070 Frontage on high volume trafficways. Frontage on high volume trafficways shall be provided with parallel service streets or such other medium of access as may be appropriate to the conditions.

19.08.080 Not Used.

19.08.110 Not Used.

19.08.112 Boundary line adjustments. A. Any proposed adjustment of boundary lines must be reviewed and approved by the Director prior to the transfer of property ownership of land between adjacent separate lots. The purpose of the Director's review is to determine if the proposed division meets the exemption requirements of ISDC 19.08.010F. In order to determine if the boundary line adjustment is exempt, the Director shall examine the Interim Zoning Code, shoreline management program, applicable board of health rules and regulations, and, in addition for developed lots, uniform fire and building codes.

B. Initial adjustment approvals shall expire if the authorized deeds transferring property ownership, together with a copy of the approved boundary adjustment, are not recorded within one year of adjustment approval.

C. Revisions of approved boundary line adjustments may be permitted within the one year approval period without a new application only if the authorized adjustment and the deeds transferring ownership have not been recorded. Modifications of recorded adjustments will require the review and approval of a new application package.

19.08.113 Boundary line correction. Any proposed adjustment of boundary lines which meets the criteria established in this section may be reviewed and approved by the Director using the procedures specified in this section.

A. Boundary line correction review procedures may be applied to lot line adjustments which meet all of the following criteria:

1. A survey by a land surveyor as defined by ISDC 19.04.430 determines that:

a. the current legal description incorrectly identifies a property line location which is inconsistent with a location recognized by property owners through established use, or

b. there is a defect in the recorded legal description which creates gaps or overlaps between existing lot lines.

2. All affected property owners agree with the proposed legal description resulting from the proposed lot line correction.

B. Adjustments meeting the criteria established for boundary line corrections as specified in subsection A will be reviewed by the department as follows:

1. Applications made to the department shall include:

a. a completed application form containing information sufficient to enable the department review of the proposed adjustment;

b. a survey map prepared by a licensed land surveyor showing:

(1) the existing incorrect and proposed correct lot line(s); and

(2) the existing incorrect and proposed correct legal description; and

(3) text designating the proposed lot line(s) and the corresponding corrected legal description as the legal property line(s); and

c. a notarized affidavit signed by all affected property owners stating that they agree to the proposed adjustment described within the survey map; and

d. the payment of applicable fees.

2. The Department shall review the complete application package submitted and approve or deny the proposed correction in accordance with the substantive provisions of ISDC 19.08.010F.

C. Boundary line correction approvals shall expire if a copy of the approved boundary correction is not recorded within one year of approval.

19.08.114 Lots created in violation of this title. A. For purposes of this title, an innocent purchaser shall mean an individual who has purchased real property for value, has not received actual notice that the lot has not been legally created as provided in ISDC 19.04.420, and has not previously been granted innocent purchaser status by the City. All contiguous lots created in violation of this title and which are under the same ownership at the time of application for innocent purchaser status shall be recognized only as a single lot.

B. An innocent purchaser of a lot created in violation of the City's subdivision requirements, who files a notarized affidavit of innocent purchase with the Department on forms satisfactory to the Director shall be treated as follows for purposes of determining zoning compliance, and for establishing eligibility for building permits and future subdivisions:

1. A lot recognized pursuant to this innocent purchaser provision will be treated the same as a legally subdivided lot if the parcel meets current zoning requirements for access, lot area and lot width;

2. Innocent purchaser lots which do not meet current zoning requirements, but which did meet zoning requirements in effect at the time that they were created, will be treated the same as legally created lots subject to ISDC 21A.12.100; and

3. Innocent purchaser lots which do not meet current zoning requirements and which did not meet the zoning requirements in effect at the time of their creation will be treated the same as legally created lots for purpose of conveyance, but will not be eligible for building permits.

19.08.120 Connection of streets with highway. No plan for the replatting, subdivision or dedication of any area shall be approved by the Department unless the streets shown therein are connected by surfaced road or street (according to City specifications) to an existing dedicated street.

19.08.130 Not Used.

19.08.140 Not Used.

19.08.150 Not Used.

19.08.160 New streets and rights-of-way. Where the City's Transportation Plan indicates the necessity of a new right-of-way of a required width or portion thereof for street purposes, in order to complete the articulation of the City street pattern, whether within a new plat, new subdivision, or along the boundaries of a new plat, new subdivision or new lot, such required right-of-way or portion thereof shall be dedicated to the City by the filing of a plat.

19.08.170 Not Used.

19.08.180 Parks, playgrounds and recreation spaces. If required by ISDC 21A.14, all plats shall provide recreation space for leisure, play, and sport activities.

19.08.210 Conformance to zoning code. All final plats shall conform with the use, density, dimensional and other standards of the zoning code in effect at the time of application. No lot or portion of a lot shall be subdivided, sold, and its ownership transferred in violation of such standards.

Covenants, as to use and resale binding all future owners of lots, more restrictive than the requirements of the zoning code, may be shown on the plat. In no case shall a

restrictive covenant contrary to the zoning code or in conflict with City policies be placed on any subdivision plat.

19.08.220 Variances and exceptions. Variations and exceptions from the dimensional standards and improvement requirements, as herein set forth, may be approved by the Department in those instances where it is deemed that hardship, topography or other factual

deterrent conditions prevail, and in such manner as it considers necessary to maintain the intent and purpose of these regulations and requirements.

19.08.230 Future use of streets - Intersection angles and grades. Due regard should be given in every case to the topography of the area, the use of the street for utility purposes and its future use for rapid traffic purposes.

When any streets or alleys intersect with high volume traffic routes or at angles that may prove dangerous, the grades shall be given special approval requirements.

Streets shall be required to intersect one another at an angle as near to a right angle as is practicable in each specific case.

19.08.290 Severability. If any provision of this chapter or its application to any person or circumstance is held invalid, the remainder of this chapter or the application of the provision to other persons or circumstances shall not be affected.

Chapter 19.24
PRIVATE STREET PLATS

Sections:

19.24.010 Not Used.
19.24.020 Not Used.
19.24.030 Not Used.
19.24.040 Not Used.
19.24.050 Owners to maintain streets, easements and utilities - Organization required to guarantee maintenance and assessment of costs.

19.24.010 Not Used.

19.24.020 Not Used.

19.24.030 Not Used.

19.24.040

Not Used.

19.24.050 Owners to maintain streets, easements and utilities - Organization required to guarantee maintenance and assessment of costs. All private streets, easements, community utilities and properties shall be maintained by the owners of property served by them and kept in good repair at all times. In order to insure the continued good repair, it must be demonstrated to the Department both prior to the recording of the plat, and at the request of the Director thereafter,that:

A.There is a workable organization to guarantee maintenance with a committee or group to administer the organizational functions;

B.There is a means for assessing maintenance costs equitably to property owners served by the private streets, easements, community utilities and properties.

Chapter 19.26
SHORT SUBDIVISION

Sections:

19.26.010 Purpose.
19.26.030 Changes to proposed or approved short plats.
19.26.050 Material errors.
19.26.060 General limitations.
19.26.080 Adequacy of access.
19.26.110 Existing nonbuilding lots.
19.26.120 Preliminary decision.
19.26.140 Final approval and recording of short plats.
19.26.150 Short plat alterations and vacations.
19.26.160 Administration.
19.26.510 Severability.

19.26.010 Purpose. The purpose of this chapter is to regulate the division of land into nine or fewer lots in accordance with applicable Washington State and City of Sammamish laws, rules, and regulations; to provide the public with clear administrative procedures for the short subdivision of land; to assure the orderly conveyance of land; and to protect the health, safety and welfare of the general public.

19.26.030 Changes to proposed or approved short plats. A. Applicant-generated modifications or requests for revision(s) which are not made in response to staff review or public appeal which result in substantial changes as determined by the division that may include creation of additional lots or elimination of open space requirements shall be treated as new applications for purposes of vesting.

B. Applicant-generated proposals to create additional lots, eliminate open space or change conditions of approval on an approved preliminary short plat shall also be treated as a new application for purposes of vesting.

C. Proposals to amend an approved final short plat shall be treated as an alteration pursuant to the provisions of this chapter regarding alterations. (Ord. 9543 § 3, 1990).

19.26.050 Material errors. Applications found to contain and be based on material errors shall be deemed withdrawn and subsequent resubmittals shall be treated as new applications. If engineering plans are returned, they shall be returned to the applicant.

19.26.060 General limitations. The following general limitations shall apply to all short subdivision applications:

A. Only a separate lot, as defined in ISDC 19.04, or a combination of two or more contiguous separate lots may be short subdivided;

B. A maximum of nine lots may be created by any single application;

C. A maximum of thirteen lots may be created from two or more contiguous parcels with any common ownership interest; and

D. Except as provided in ISDC 19.26.150, if the lot to be subdivided was created through a prior short subdivision, at least ten years must have passed since the recording of such prior short subdivision.

19.26.080 Adequacy of access. A. Each lot within the short subdivision or short subdivision alteration shall have acceptable access to a street conforming to City street standards or to a lower level of improvement acceptable to the City Engineer. Individual lots may be served by access panhandles, established either by fee ownership or easement,

subject to approval of the Department. In order to assure safe and adequate access, the Director:

1. Not Used. 2. May limit direct access to certain streets and require on-site public streets in lieu of individual driveways or access panhandles, in accordance with the City street standards;

3. Shall require off-site improvements to public or private streets needed to provide access from the short subdivision to a road acceptable to the City Engineer; and

4. Shall assure that the number of lots to be served by the street system complies with the street standards.

B. Right of way use permits. Short subdivisions involving construction within City rights-of-way shall obtain a right-of-way use permit pursuant to ISDC 14.28, Rights-of-way.

19.26.110 Existing nonbuilding lots. An owner of an existing nonbuilding lot may seek to have that lot recognized by the City as a legal building site by either of the following procedures:

A. Short subdivision or alteration as provided in this chapter; or

B. Subdivision as provided in ISDC 19.36, Subdivision Procedure.

19.26.120 Preliminary decision. A. Following acceptance of a complete application and fulfillment of the applicant process and procedure requirements of this Title the Department shall make a preliminary decision supported by written findings based on the following factors:

1. Conformance with adopted City and state rules and regulations in effect on the date the complete application was received. Such rules and regulations include, but are not limited to: RCW 58.17; SEPA (RCW Ch. 43.21C) as implemented by ISDC Chapter 20.44; ISDC Title 21A, Zoning; ISDC 14.42, Street Standards; King County Code 9.04, Surface Water Runoff; ISDC Title 25, Shoreline Management, ISDC 19.26, Short Subdivisions; ISDC Title 17, Fire Code;; administrative rules adopted pursuant to ISDC 2.98 to implement any such code or ordinance provision; King County board of health rules and regulations;; and conformance with applicable private restrictions and covenants.

2. Consideration of the recommendations or comments of those agencies having pertinent expertise or jurisdiction.

B. The preliminary decision shall become effective fourteen calendar days after postmarked date of issuance of the notice unless the appeal period is extended for an additional seven days (if WAC 197-11-340(2)(a) applies).

C. Short subdivision preliminary approvals shall be valid for thirty-six months. Not Used.

D. If any condition is not satisfied and the final short plat is not recorded within the approval period the short subdivision approval shall be null and void. If all conditions have been satisfied and all required documents have been submitted within the approval period, the Department may
grant a single extension of up to ninety days to obtain additional information or for the processing and recording of final short plat documents. Applicants will have a maximum of thirty days to comply with requests for additional information made within the extension period.

E. All construction and site development activities related to the short subdivision are prohibited until the preliminary decision becomes effective or until authorized by any required plan approval required as a condition of preliminary short subdivision approval.

19.26.140 Final approval and recording of short plats. A. All short subdivisions shall meet the following provisions prior to recording:

1. All final short subdivisions shall be surveyed and the final recording forms shall be prepared by a licensed land surveyor;

2. Surveys shall include those items prescribed by RCW 58.09.060, Records of Survey, Contents - Record of Corner, Information;

3. Plat certificates or owner's duplicate certificates for land registered pursuant to RCW 65.12, Registration of Land Titles, shall be obtained and provided by the applicant for any approved short subdivision;

4. A supplemental plat certificate shall be provided if the final short plat is not recorded within 30 days of the original certificate or supplemental certificate date;

5. All required improvements must be installed and approved, or bonded as specified for plats in ISDC 19.36, Subdividing Procedure, and in ISDC 19.26.090B and 19.26.100B.

6. The requirement for a deposit to cover anticipated taxes as required for plats in RCW 58.08 Plats - Recording, is waived for the filing of short plats. However, the applicant shall be required to provide certification from the King County office of finance that property taxes for the subject property are not delinquent prior to issuance of a final approval, and

7. All applicable final approval fees set forth in ISDC Title 27, Development Permit Fees, and any civil penalties assessed pursuant to ISDC Title 23, have been paid.

B.Final short plat recording forms shall contain the following signatures, approvals, or information in the format prescribed by the Director:

1. Lots shall be designated by number on the short plat within the area of the lot. Tracts shall be similarly designated by letter and each tract shall be clearly identified with the ownership and purpose;

2. Signature and stamp of the land surveyor who prepared the final short plat;

3. All required dedications;

4. Reference to the recording number of the completed survey as required by this section if the boundaries have been previously surveyed;

5. Reference to all agreements or covenants required as a condition of approval;

6. Notarized signatures of all persons having an ownership or security interest in the land being subdivided;

7. Approval of the City Engineer;

8. Not Used.

9. Approval of the Director; and

10. Not Used.

C. The Director shall examine and sign the final short plat if it and the short subdivision it represents conform to all conditions of preliminary and final approval. Short plats shall be recorded with the King County division of records and elections. A copy of the documents stamped with the recording number shall be sent by the Department to the King County department of assessments and to the applicant. Final short plats shall become effective upon recording.

19.26.150 Short plat alterations and vacations. A. Within ten years of the recording date, any recorded short plat may be altered provided no more than a total of nine lots result within the boundaries of the original short plat. After ten years from the recording date, the short plat may be altered or the land may be subdivided further in accordance with this chapter. An alteration may include adjacent separate lots provided no more than thirteen lots result within the boundaries of the original short plat together with such additional property. The following requirements apply to all short plat alterations:

1. All persons having any ownership or security interest in the lots or tracts of the original recorded short plat being altered must sign the final altered short plat forms.

2. Any features contained on the original short plat which have been relied upon in subsequent land development or City planning decisions shall be incorporated on the short plat alteration.

3. Lot lines of lots which are non-conforming only by reason of insufficient square footage may be altered without regard to current square footage requirements as long as they are not made more nonconforming and as long as no additional lots are created, and the proposed lots are consistent with the other dimensional requirements of the zoning in effect at the time of the original short plat approval. Any newly created additional lots must meet current zoning requirements and King County board of health rules and regulations regarding minimum lot size.

4. The criteria cited in ISDC 19.26.120 shall be used as the basis to approve or deny any proposed alteration. Seattle-King County department of public health approval shall be required in accordance with ISDC 19.26.090 and 19.26.100.

B. Any short plat alteration which deletes all interior boundaries shall constitute a vacation of the original short plat, effective at the time the altered short plat is recorded.

C. Short plat alterations or vacations involving public dedications shall be processed in the manner provided by law for alteration or vacation of subdivisions. All other short plat alterations or vacations shall be processed as set forth in ISDC 19.26.030, 19.26.140 and 19.26.150.

D. Approved alterations and vacations shall be recorded with the King County division of records and elections, as provided in ISDC 19.26.140. (Ord. 12195 § 2, 1996: Ord. 9543 § 14, 1990).

19.26.160 Administration. The Department is authorized to develop and adopt administrative rules and regulations under the procedures specified in ISDC 2.98, Rules of City Departments, for the purpose of implementing and enforcing the provisions of this chapter. Rules adopted under this section must be approved by the City Council.

19.26.510 Severability. If any provision of this chapter or its application to any person or circumstance is held invalid, the remainder of this chapter or the application of the provision to other persons or circumstances shall not be affected.

Chapter 19.28
PRELIMINARY PLAT[1]

Sections:

19.28.020 Standard for treatment of unrecorded plats and dedications-Applicant to show water supply and distribution, and method of sewage disposal.
19.28.050 Qualifications governing approval of plat.
19.28.055 Not Used.

19.28.020 Standard for treatment of unrecorded plats and dedications - Applicant to show water supply and distribution, and method of sewage disposal.

A. UNRECORDED PLATS. An existing unrecorded plat shall be treated as a preliminary plat with due regard for the legal rights of any persons who may have purchased lots therein.

B. DEDICATIONS, EXPLANATIONS. Applicants are notified that dedications are absolute, and no reservations or exceptions for any purpose whatsoever will be permitted, whether in dedication or upon the face of the plat.

C. WATER SUPPLY. The applicant of every proposed plat must show that the area to be platted is provided with a public domestic supply and distribution system within or without the plat installed according to plans approved by the county department of health. If there is no established water supply system in the district to which the pieces or parcels of land in the plat may be connected, the applicant must set aside a favorable park or other area of suitable size upon which shall be located a community deep well or wells which shall be set aside for community use, or the applicant must show that there is a potential water supply accessible to and provided for each lot or tract in the plat or subdivision. Such water supply and distribution system, community well or wells or water supply to be constructed on such areas of such depth and design as to amply protect the water supply and all plans to be approved by the King County department of health.

D. SOURCES OF WATER SUPPLY (or note stating source).

E. METHOD OF SEWAGE DISPOSAL (with letter of approval from the King County health department).

19.28.050 Qualifications governing approval of plat. A. PRELIMINARY APPROVAL. Hearing Examiner approval of the preliminary plat shall furnish a firm basis upon which the applicant may proceed with development of the subdivision and preparation of the final plat subject only to all the conditions of preliminary approval imposed on the preliminary plat.

B. REVISIONS. The Department may approve minor changes or revisions as are deemed necessary to the interests and needs of the community, consistent with the adopted policies and standards of the county.

[1] [Preliminary plat to be prepared by registered surveyor or engineer - See ISDCISDC 19.36.020.]

C. ENGINEERING DETAILS. Subsequent approval of the engineering details of the proposed streets, storm drainage, sanitary sewer and water systems and other proposed public facilities by the City Engineer will be required prior to the approval of the final plat.

D. APPROVAL TIME.

1. For all plats receiving preliminary approval such approval shall be effective for a period of sixty months.

2. Not Used.

3. Not Used.

4. Not Used.

E. Plats in UPD's. A UPD permit, or development agreement approved pursuant to ISDCISDC 21A.39 may extend the preliminary approval period beyond sixty months for any preliminary plat approved simultaneous or subsequent to the UPD permit. Such extensions may be made contingent upon satisfying conditions set forth in the UPD permit, or development agreement. In no case shall the extended preliminary approval period exceed the expected buildout time period of the UPD as provided in the UPD permit, or development agreement. This section shall apply to any approved UPD permit, or development agreement in existence on the date of adoption of this section, or approved subsequent to the adoption of this section.

19.28.055 Not Used.

Chapter 19.32
FINAL PLAT

Sections:

19.32.010 Approval, drawing and recording.
19.32.020 Information required to be shown on plat-Compliance with county health regulations.
19.32.030 Standards for plat meander lines along bodies of water, setting of monuments, property descriptions and signatures.
19.32.040 Protective deed covenant-Forms.

19.32.010 Approval, drawing and recording. A. APPROVAL AND DRAWING. After approval of the preliminary plat by the Department, and the fulfillment of the requirements of these regulations and any other requirements specified by the Department, one drawing of the final plat of the subdivision, eighteen inches by twenty-two inches in size, allowing one-half inch for a border, shall be submitted to the Director for approval.

A final plat shall be drawn on the best grade of paper. If more than one sheet is required, each sheet, including the index sheet, shall be of the above specified size. The index sheet must show the entire subdivision with street and highway names and block numbers.

B.RECORDING. Upon approval by the City Council, the final plat shall be recorded with the county records and elections division auditor.

19.32.020 Information required to be shown on plat - Compliance with county health regulations. A. IDENTIFICATION AND DESCRIPTION.

1. Name of subdivision;
2. Location by section, township and range, or by other legal description;
3. The name and seal of the registered engineer or the registered land surveyor;
4. Scale (same as preliminary plat) shown graphically, date and northpoint. The scale of the final plat shall be such that all distances and bearings can be clearly and legibly shown thereon in their proper proportions. Plats unduly cramped and whose essential data cannot be clearly read will not be approved.

B.DELINEATION.

1. Boundary of plat, based on an accurate traverse, with angular and lineal dimensions;
2. Exact location, width, and name of all streets within and adjoining the plat, and the exact location and widths of all alleys. The name of a street shall approved by the City Engineer;
3. True courses and distances to the nearest established street lines or official monuments which shall accurately describe the location of the plat;
4. Municipal, township, county or section lines accurately tied to the lines of the subdivision by distances and courses;
5. Radii, internal angles, points of curvature, tangent bearings and lengths of all areas;
6. All easements for rights-of-way provided for public services or utilities;

7. All lot and block numbers and lines with accurate dimensions in feet and hundredths. Blocks in numbered additions to subdivisions bearing the same name may be numbered or lettered consecutively through the several additions;

8. Accurate location of all monuments, which shall be concrete and four inches by four inches at top, six inches by six inches at bottom and twenty-four inches long, with a metal marker cast in the center. One such monument shall be placed at each street intersection, and at locations to complete a continuous line of sight and at such other locations as required by the county engineer;

9. All plat meander lines or reference lines along bodies of water shall be established above the high water line of such water;

10. Accurate outlines and legal description of any areas to be dedicated or reserved for public use, with the purposes indicated thereon and in the dedication; and of any area to be reserved by deed covenant for common uses of all property owners;

11. Building setback lines accurately shown with dimensions.

C.SANITARY CONDITIONS.

All rules, regulations or orders of the Seattle-King County health department applicable to the property shall be effective

19.32.030 Standards for plat meander lines along bodies of water, setting of monuments, property descriptions and signatures. A. PLAT MEANDER LINES. When a subdivision borders on a body of water a plat meander line shall be established along the shore not more than twenty feet back from the ordinary
high water mark of such body of water.

B.MONUMENTS. It is intended that all monuments shall be set after the grading of the streets. In case the plat be approved before the grading is complete, the grading shall be done and the monuments shall be set before the release of the road guarantee bond.

C.PROPERTY DESCRIPTION. A description of property platted shall be the same as that recorded in preceding transfer of said property or that portion of said transfer covered by plat. Should this description be cumbersome and not technically correct, a true and exact description shall be shown upon plat together with original description. The correct description shall follow: "The intent of the above description is to embrace all the following described property."

D.SIGNATURES. All signatures shall be in india ink or other ink of equal density. No interlineations will be permitted.

19.32.040 Protective deed covenant - Forms. A. A typewritten or typeprinted copy of the protective deed covenants shall accompany the final plat.

B.FORMS (See sample plat filed in records and elections division).

1. Dedication with notarized acknowledgment, by owner or owners, of the adoption of the plat and the dedication of streets and other public acres. In case of corporation, proper acknowledgment shall be used;

2. Restrictions;

3. Certification by registered surveyor to the effect that the plat represents a survey made by him and that the monuments shown thereon exist as located and that all dimensional and geodetic details are correct;

4. Proper forms for the approvals of City Engineer, of the Department Director ices, and of the City Council with space for signatures;

5. Approval by signature of county records and elections division, as to filing for record.

Each and all of the above forms including the description shall be printed with india ink in distinct, legible lettering and shall be substantially in the form of the sample plat filed in the records and elections division.

Chapter 19.33
BINDING SITE PLAN

Sections:

19.33.010 Purpose.
19.33.020 Applicability.
19.33.040 Approval.
19.33.050 Recording and binding effect.
19.33.060 Amendment, modification and vacation.
19.33.070 Administrative rules.
19.33.200 Severability

19.33.010 Purpose. The purpose of this chapter is to create a permit for dividing commercially and industrially zoned property, as authorized by RCW 58.17.035. On sites which are fully developed, the binding site plan merely creates or alters interior lot lines. In all cases the binding site plan ensures, through written agreements among all lot owners, that the collective lots continue to function as one site concerning but not limited to: lot access; interior circulation; open space; landscaping and drainage; facility maintenance; and coordinated parking.

19.33.020 Applicability. A. Any applicant seeking the use of a binding site plan to divide his or her property for the purpose of sale, lease or transfer of ownership of commercially or industrially zoned property is required to apply for, complete and have approved a binding site plan prior to any property division, as provided in RCW 58.17 and as required by this chapter.

B. The site which is subject to the binding site plan shall consist of one (1) or more contiguous lots legally created.

C. The site which is subject to the binding site plan may be reviewed independently for fully developed sites; or, concurrently with a commercial site development permit application for undeveloped land; or in conjunction with a valid commercial site development permit.

D. The binding site plan process merely creates or alters lot lines and does not authorize substantial improvements or changes to the property or the uses thereon.

19.33.040 Approval. A. The Director shall consider and base his decision to approve with or without conditions, deny or return the application for modifications, based on:

1. a finding that the newly created lots will continue to function and operate as one site, for fully developed sites; or

2. conformity of the proposed site plan with the adopted rules and regulations as represented in the approved commercial site development plan, if the binding site plan is being considered with a commercial site development plan.

B. If the Director denies the application or otherwise orders the site plan returned, the plan shall be returned to the applicant.

C. The binding site plan shall contain applicable inscriptions or attachments setting forth limitations and conditions to which the plan is subject, including any applicable irrevocable dedications of property and containing a provision requiring that any development of the site shall be in conformity with the approved site plan.

D. The Director may modify lot-based or lot line requirements contained within the building, fire and other similar uniform codes adopted by the City.

E. The Director may authorize sharing of open space, parking, access and other improvements among contiguous properties subject to the binding site plan. Conditions of use, maintenance and restrictions on redevelopment of shared open space, parking, access and other improvements shall be identified on the binding site plan and enforced by covenants, easements or other similar mechanisms.

F. The decision of the Director shall be final.

19.33.050 Recording and binding effect. A. Prior to recording, the approved binding site plan shall be surveyed and the final recording forms shall be prepared by a professional land surveyor, licensed in the state of Washington. Surveys shall include those items prescribed by RCW 58.09.060, records of survey, contents - record of corner, information;

B. The approved binding site plan recording forms shall include the following, in the format prescribed by the Director:

1. Lots designated by number on the binding site plan within the area of the lot. Tracts shall be similarly designated and each tract shall be clearly identified with the ownership and purpose;

2. Signature and stamp of the land surveyor who prepared the binding site plan;

3. Reference to the recording number of the completed survey as required by this section if the boundaries have been previously surveyed;

4. Reference to all agreements or covenants required as a condition of approval;

5. Notarized signatures of all persons having an ownership or security interest in the land being divided;

6. Approval of the King County development engineer;

7. Approval of the King County assessor; and

8. Approval of the Director.

C. The Director shall examine and sign the approved binding site plan if it conforms with the commercial site development permit or the approved site plan and all conditions of approval. Binding site plans shall be recorded with the King County records and elections division with a record of survey. A copy of the documents stamped with the recording number shall be sent by the division to the King County department of assessments and to the applicant.

D. Lots, parcels, or tracts created through the binding site plan procedure shall be legal lots of record. All provisions, conditions, and requirements of the binding site plan shall be legally enforceable on the purchaser or any other person acquiring a lease or other ownership interest of any lot, parcel, or tract created pursuant to the binding site plan.

E. Any sale, transfer, or lease of any lot, tract, or parcel created pursuant to the binding site plan, that does not conform to the requirements of the binding site plan or without binding site plan approval, shall be considered a violation of chapter 58.17 RCW and shall be restrained by injunctive action and be illegal as provided in chapter 58.17 RCW.

19.33.060 Amendment, modification and vacation. Except as provided in ISDC 19.08.010, amendment modification and vacation of a binding site plan shall be accomplished by following the same procedure and satisfying the same laws, rules and conditions as required for a new binding site plan application, as set forth in this chapter. If a portion of a binding site plan is vacated, the property subject to the vacated portion shall constitute one (1) lot unless the property is subsequently divided by an approved subdivision or short subdivision.

19.33.070 Administrative rules. The Director may promulgate administrative rules and regulations, pursuant to ISDC 2.98, to implement the provisions and requirements of this chapter.

19.33.200 Severability. If a provision of this chapter or its applicability to any person or circumstance is held invalid, the remainder of the provisions of this chapter or the application of the provision to other persons or circumstances shall not be affected.

Chapter 19.34
RESIDENTIAL CONDOMINIUM BINDING SITE PLAN REVIEW PROCESS

Sections:

19.34.010 Applicability.
19.34.020 Binding site plan on recorded planned unit developments.
19.34.030 Building permits.
19.34.040 Conceptual plans.
19.34.050 Appeal.
19.34.060 Recording.
19.34.070 Amendments and rescindment.
19.34.080 Return of plans.

19.34.010 Applicability. A. This process may be used to divide land by the owner of any legal lot which is to be developed for residential condominiums pursuant to RCW 64.32 or RCW 64.34. A binding site plan for a residential condominium project shall be based on either a recorded final planned unit development, a building permit issued for the entire project, or a conceptual site plan as set forth in ISDC 19.34.040 of this chapter.

B. This process is separate from other site plan review processes including those provisions of ISDC Title 21A and shall not be construed to substitute for the requirements of such processes.

19.34.020 Binding site plan on recorded planned unit developments. Whenever a binding site plan for a residential condominium development is proposed on a parcel for which a final planned unit development has been recorded, a copy of the planned unit development site plan shall be recorded as the binding site plan upon verification by the Director that the binding site plan is the same as or contains the relevant details of the planned unit development site plan.

19.34.030 Building permits. Whenever a binding site plan for a residential condominium development is proposed on a parcel of land for which a building permit has been issued for the entire project, the following must be satisfied prior to recording:

A.A plan shall be prepared in a form prescribed by the Director which is adequate for permanent retention by the King County records and elections division.

B.The plan must be prepared by a registered land surveyor or civil engineer.

C.The plan must substantially reflect the site plan approved for the building permit. Specific details not relevant to the division of land may be omitted.

D.The plan must be verified by the Director for compliance with the approved building permit. The Director may require dedication of additional right-of-way for public streets pursuant to the criteria set forth in ISDC 19.26.310.

E.The legal description and map must be verified by the City Engineer.

19.34.040 Conceptual plans. Whenever a binding site plan for a residential condominium project is proposed on a parcel of land for which neither a planned unit development nor a building permit has been approved for the entire parcel, the following must be satisfied prior to recording:

A.A conceptual site plan shall be prepared in a form prescribed by the Director which includes the following information:

1. Maximum number of dwelling units permitted.
2. Approximate size and location of all proposed buildings.
3. Approximate layout of an internal vehicular circulation system, including proposed ingress and egress.
4. Approximate location of proposed open space, including required landscaped areas, if any.

5. Approximate location of proposed parking areas.
6. Location and size of utility trunk lines serving the site.
7. Topography detailed to five-foot contours.

B. Upon application the Director shall distribute copies to public agencies having pertinent expertise or jurisdiction for review and comment.

C. The Director shall consider, and base his decision to approve with or without conditions, deny or return the application on the following:

1. Conformance of the proposed site plan with any approved building permit or planned unit development and any conditions on a portion of the site, and with any applicable codes and ordinances, of the State of Washington and the City of Sammamish. The Director shall identify, to the extent feasible, conditions likely to be imposed on building permits related to dedication of right-of-way or open space, and tracts, easements or limitations which may be proposed or required for utilities, access, drainage controls, sanitation, water supply, protection of sensitive areas or other unique conditions or features which may warrant protection of the public health, safety, and welfare. Such preliminary conditions shall not be binding at the time of building permit approval.

2. The recommendations and comments of agencies having pertinent expertise or jurisdiction.

3. The Director may require dedication of additional road right-of-way pursuant to the criteria of ISDC 19.26.310.

D. Additional documents shall be submitted as necessary for review and approval which may include a plat certificate, boundary survey, agreements, easements and covenants.

E. The plan must be approved and signed by the City Engineer.

F. Prior to recording, the Director shall verify the final plan and any attachments to determine whether the binding site plan is accurate and complete and complies with any conditions or approval.

Approval of a conceptual plan does not give the applicant a vested right to build without regard to subsequent changes in zoning or building codes or other applicable land use regulations prior to application for a building permit on the subject property.

19.34.050 Appeal. Any decision of the Director shall be final unless appealed to the Hearing Examiner pursuant to Chapter 20.24. 19.34.060 Recording. The proposed binding site plan approved by the Director shall be recorded with the King County Records and Elections Division within thirty days of approval. Upon recording, the site plan shall be binding on the owner, his heirs and assigns, and shall permit the division of land within the site. Divisions shall only be permitted upon the filing of a declaration,

and a survey map and plans under the Horizontal Property Regimes Act, RCW 64.32, or the Condominium Act, RCW 64.34, as applicable, provided the structure or structures, road and parking systems, and related facilities substantially conform to the recorded binding site plan.

19.34.070 Amendments and rescindment. A. Amendment of a recorded residential condominium binding site plan shall be accomplished by following the same process as required for a new application as set forth in this chapter.

B. Upon the request of the owner or owners of a legal lot or lots subject to a recorded binding site plan the Director shall rescind all or a portion of a binding site plan, provided that any portion of a binding site plan which is rescinded shall be considered to be one lot unless divided by an approved subdivision or short division.

C. Signatures of owners of portions of a binding site plan which are not altered by an amendment or rescission are not required on the amended binding site plan or application for rescission.

19.34.080 Return of plans. If the application is denied, withdrawn or otherwise returned, it, along with any engineering plans, shall be returned to the applicant.

Chapter 19.36
SUBDIVIDING PROCEDURE

Sections:

19.36.010 Discussion with Department of Community Development
19.36.020 Preparation by surveyor.
19.36.040 Review by department of public works and health department.
19.36.060 Final plat to conform to preliminary plat - Improvements to conform to certain specifications - Surety bond for improvements.
19.36.065 Status of Current Bonds.
19.36.070 Submission of final plat to the department - Filing fees - Deposit to cover cost of checking plat - Certificate of title - Certificate of tax payment and deposit.
19.36.080 Filing plat for record.
19.36.085 Changes to proposed or approved plats.
19.36.087 Material errors.
19.36.089 Not Used.
19.36.090 Severability.

19.36.010 Discussion with Department of Community Development. The proposed layout shall first be discussed with the Department.

19.36.020 Preparation by surveyor. The preliminary plat shall be prepared by a registered surveyor or engineer.

19.36.040 Review by the City Engineer. Upon receipt of the preliminary plat, the Department shall submit copies to the City Engineer for review and comment concerning the acceptability of the plat and conformance with the regulations. The City Engineer will indicate his or her approval on the print of the preliminary plat which will be returned to the applicant. Any changes required by the Department or the City Engineer will be marked on this print.

19.36.060 Final plat to conform to preliminary plat - Improvements to conform to certain specifications - Surety bond for improvements. A. After the return of the approved print of the preliminary plat to the applicant, the applicant is in position to go ahead with the improvement with the assurance that the final plat will be approved, provided that:

1. The final plat strictly conforms with the approved preliminary plat;

2. The improvements have been installed in accordance with the current City of Sammamish specifications for private work on City rights-of-way with the approval of the City Engineer or that the applicant has deposited a performance bond with the Director in an amount equal to the Director's estimate for such improvements, based on current City bonding schedules, as a guarantee that the plattor will, within one year from date of acceptance of the final plat, complete the improvements in accordance with the requirements and to the satisfaction of the City Engineer or in the alternative to the above required bond, the Director may accept other secure methods providing for and securing to the county the actual construction and installation of such improvements within a one-year period and on the terms identical to the herein described bond.

B.A bond or other satisfactory security to secure the successful operation of improvements for a period of 12 months in an amount and form satisfactory to the Director. Such bond or security shall cover workmanship and materials, damage from reasonable expected usage and damage due to construction activities.

1. The bond shall be deposited by the applicant with the manager either:

a. Prior to the recording of the final plat when the applicant has constructed improvements in accordance with City's specifications and with the approval of the City Engineer, or

b. Prior to release of the performance bond or the acceptance by the City of streets and street drainage facilities for maintenance following final construction inspection.

2. The bond shall be in effect for a period of not less than 12 months commencing upon the date of:

a. final plat recording, or

b. release of performance bond, or

c. acceptance by the City of streets and street drainage facilities for maintenance following final construction inspection, whichever occurs last.

19.36.065 Status of current bonds. A. The City County council recognizes the long-standing policy and administrative practice of requiring bonds for subdivision improvements to ensure their successful operation.

B. All bonds or other satisfactory security required by the Department and posted by the applicant prior to the effective date of this section shall continue to be in force until released by the Director following satisfactory inspection by the Department.

19.36.070 Submission of final plat to the Department - Filing fees - Deposit to cover cost of checking plat - Certificate of title - Certificate of tax payment and deposit. On completion of the improvements required by the City Engineer, or upon the receipt of the bond guaranteeing the completion of the improvement, the final plat shall be submitted to the Department accompanied by the following:

A. The applicant shall deposit a check payable to the City of Sammamish in an amount to be determined by the City according to the legal requirement, which is twenty-five cents for every enclosure; seven dollars for description; one dedication, one acknowledgment, etc.; one dollar for each additional dedication or acknowledgment made upon such plat; five dollars for each additional sheet if plat is to be recorded on more than one sheet; twenty-five cents for every enclosure on both original plat and replat, in case of replat; ten cents for each lot or cemetery plat. If the property is registered under the Torrens Act, an additional charge of one dollar and fifty cents shall be charged for each numeral entered on the register. Title shall be obtained from the registrar of the Torrens Act;

B. The applicant shall be prepared to make a deposit equal to the estimated cost (to be determined by the City Engineer) of checking the plat. The deposit shall be made with the City to be credited to the Street fund. All work done by the City Engineer in connection with the checking, computing and correcting such plat, either in the field or in the office, shall be charged to such deposit.

If, during the process of checking, the City Engineer finds that the cost of checking will exceed the estimated cost, the City Engineer shall notify the applicant to deposit an additional amount to cover the cost of the checking. After the City Engineer has completed the checking of the plat, he or she shall forward to the Finance Department a statement of the checking charges incurred. The Finance Department, upon receipt of the statement, shall refund to the applicants the difference between the checking charges and amount deposited or shall require the applicant to pay the difference if the checking charges are greater than the amount deposited;

C. A certificate of title from a reputable abstractor, showing the ownership and title of all the interested parties in the plat, subdivision or dedication. The certificate shall be dated not to exceed thirty days prior to the time of submitting the plat for final approval;

D. A certificate by the County Treasurer's Office showing that taxes have been paid in accordance with RCW 58.08.030 and 58.08.040, and that deposit has been made for the

taxes for the following year. Also, a certificate by the County Treasurer's Office showing that all taxes and assessments levied and chargeable against the property in the plat, replat or subdivision have been in accordance with RCW 58.08.030;

E. Not Used.

19.36.080 Filing plat for record. A. APPROVAL. After the City Engineer has completed the checking of the plat, he shall affix his or her signature into the space provided and send the plat to the Department with a letter stating that all requirements of this resolution have been fully complied with, with the exception of the certification by the County Treasurer's Office.

The Department shall, following their approval of the plat, forward the tracing to the King County office of finance for the certification which is required by law. The King County office of finance immediately following the certification shall forward the tracing to the council for its approval;

B. FILING. All plats shall be filed for record at the request of the City Council. After the plat has been recorded, the original tracing shall be filed for record as the property of King County, Washington.

19.36.085 Changes to proposed or approved plats. A. Applicant-generated modifications or requests for revision(s) which are not made in response to technical staff review, throughout the public process or from Hearing Examiner conditions which result in any substantial changes as determined by the Department including the creation of additional lots or elimination of open space requirements shall be treated as a new application for purposes of vesting.

B. Applicant-generated proposals to create additional lots, elimination of open space or changed conditions of approval on an approved preliminary plat shall also be treated as new applications for purposes of vesting.

C. Proposals to amend an approved final plat shall be treated as an alteration pursuant to the provisions of this chapter regarding alterations.

19.36.087 Material errors. Applications found to contain and be based on material errors shall be deemed withdrawn and returned to the applicant. Subsequent resubmittals shall be treated as new applications.

19.36.089 Not Used.

19.36.090 Severability. Should any section, subsection, paragraph, sentence, clause or phrase of this section be declared unconstitutional or invalid for any reason, such decision shall not affect the validity of the remaining portion of this section.

Chapter 19.40
VIOLATION

Sections:

19.40.010 Procedures.
19.40.020 Enforcement.

19.40.010 Procedures. A. VIOLATIONS. Pursuant to RCW 58.17.300, any person, firm, corporation, or association, or any agent of any person, firm, corporation or association who violates any provision of this title, relating to the sale, offer for sale, lease or transfer of any lot, tract or parcel of land is guilty of a gross misdemeanor, and shall be subject to the penalties, purchasers' remedies and other legal sanctions authorized in this chapter, and in Title 23.

B.ENFORCEMENT. Penalties, purchasers, remedies, injunctions, and other legal sanctions necessary for the enforcement of this title shall be governed by RCW 58.17.200, 58.17.210, 58.17.220, 58.17.230, 58.17.300, and 58.17.320, which are hereby adopted by reference. Injunctive remedies shall be available for enforcement of all chapters in this title.

C.REVIEW OF DECISION. Court review of any decision approving or disapproving any application authorized by any chapter of this title for unlawful, arbitrary, capricious or corrupt action or nonaction shall be governed by RCW 58.17.180, which is hereby adopted by reference.

19.40.020 Enforcement. The Director of the Department of Community Development is authorized to enforce the provisions of this chapter, the ordinances and resolutions codified in it, and any rules and regulations promulgated thereunder pursuant to the enforcement and penalty provisions of Title 23.

Chapter 20.12
INTERIM SAMMAMISH COMPREHENSIVE PLAN

Sections:

20.12.010 Interim Comprehensive plan adopted.
20.12.015 Not Used.
20.12.017 Not Used.
20.12.050 Not Used.
20.12.090 Not Used.
20.12.100 Not Used. 20.12.150 Not Used.
20.12.160 Not usedl
20.12.200 Shoreline management master program.
20.12.240 Not Used.
20.12.325 Not Used.
20.12.337 Not Used.
20.12.380 Not Usedl
20.12.410 Severability.
20.12.430 King County Transportation Plan.
20.12.433 Not Used.

20.12.460 Not Used.
20.12.461 Not Used.

20.12.462 Not Used.
20.12.463 Issaquah School District Capital Facilities Plan.
20.12.464 Not Used.
20.12.465 Not Used.
20.12.466 Lake Washington School District Capital Facilities Plan.
20.12.467 Not Used.
20.12.468 Not Used.
20.12.469 Not Used.
20.12.470 Not Used.

20.12.471 Not Used.
20.12.480 Not Used.
20.12.485

20.12.10 **20.12.010 Interim Comprehensive plan adopted.** A. Under the provisions of the Optional Municipal Code and pursuant to the Washington State Growth Management Act, chapter 36.70A RCW, the Interim Sammamish Comprehensive Plan is adopted and declared to be the comprehensive plan for City of Sammamish

until amended, repealed, or superseded. The Interim Sammamish comprehensive plan shall be the principal planning document for the orderly physical development of the county and shall be used to guide functional plans, provision of public facilities and services, review of proposed annexations, development regulations and land development decisions. The Interim Sammamish Comprehensive Plan is based on the King County Comprehensive Plan of 1994, with applicable amendments, which is in force and adopted as of August 31, 1999.

20.12.200 Shoreline management master program. The policies, objectives and goals of the shorelines management master program, are adopted as an addendum to the comprehensive plan forCity of Sammamish. As an addendum to the comprehensive plan, such policy statement constitutes the official policy of City of Sammamish regarding areas of the county subject to shoreline management jurisdiction.

20.12.240 Not Used.

20.12.325 Not Used.
20.12.337 Not Used.
20.12.380 Not Used

20.12.410 Severability. Should any section, subsection, paragraph, sentence, clause or phrase of this chapter be declared unconstitutional or invalid for any reason, such decision shall not affect the validity of the remainder of this chapter.

20.12.430 Interim Sammamish Transportation Plan. A. The Interim SammamishTransportation Plan consists of the following elements:

1. Policy element, consisting of the transportation-related policies from the King County Comprehensive Plan 1985, and the transit/ridesharing/rail policy actions.

2. The arterial functional classification report changes 3. The transportation priority process.

4. The annual transportation needs report.

5. The implementation strategy report, as amended.

B. The council finds that the King County Transportation Plan environmental impact statement is adequate to support adoption of the King County Transportation Plan.

C. The King County Transportation Plan, dated October 1989, is adopted as the functional plan implementing the transportation policies established by the Interim Sammamish Comprehensive Plan. As an amplification and augmentation of the King County Comprehensive Plan, it constitutes official county policy with regard to surface transportation issues.

D. The Interim Sammamish Transportation Plan's elements dealing with "Transportation Needs Report" and "Arterial Functional Classification" shall be subject to an annual review and update process preparatory to the capital improvement program budgeting process. Updates shall incorporate community plan revisions, additional functional plan elements, other local and regional transportation plans and studies, and other information available to the county road engineer, and shall include public review and information in the annual review of the updates. The department of community development shall provide an update report to the executive and council on these elements before finalization of the roads capital improvement program budget identifying possible changes to the needs lists or arterial classifications, and why these changes are needed.

E. The Transportation Plan shall be implemented through:

1. Adoption of an annual six year capital improvement program.

2. Application of the Road Adequacy Standards, ISDCTitle 14.

3. Application of the mitigation payment system, ISDCTitle 14.

4. Mitigation of transportation impacts as required and authorized under the State Environmental Policy Act.

5. Road maintenance and traffic operating improvements.

6. Pursuit of additional funding sources at the local, state and federal levels whenever possible.

7. Participation by the county in regional efforts to enhance bus transit usage and development of a rail/high capacity transit system.

8. Establishment of a system for reviewing proposed developments for their impacts on equestrian, pedestrian and bicycle traffic and requiring mitigation when adverse impacts will occur.

9. Development of transportation system management techniques, zoning code changes, and road improvements to enhance the use of transit and increase vehicle occupancy.

10. Coordination of plans, projects, programs and policies with other governments.

Not Used.

20.12.463 Issaquah School District Capital Facilities Plan. The Issaquah School District No. 411 1998 Capital Facilities Plan, adopted April 8, 1998, revised June 4, 1998, which is included in Attachment D to Ordinance 13338 and is incorporated herein by reference, is adopted as a subelement of the capital facilities element of the City of Sammamish Interim Comprehensive Plan.

Not Used.

20.12.466 Lake Washington School District Capital Facilities Plan. The Lake Washington School District No. 414 Six-Year Capital Facilities Plan 1998 to 2003, board approved April 20, 1998, which is included in Attachment G to Ordinance 13338 and is incorporated herein by reference, is adopted as a subelement of the capital facilities element of the City of Sammamish Interim Comprehensive Plan.

20.12.480 Not Used.
20.12.485

Chapter 20.20
PROCEDURES FOR LAND USE PERMIT APPLICATIONS, PUBLIC NOTICE, HEARINGS AND APPEALS

Sections:

20.20.010 Chapter purpose.
20.20.020 Classifications of land use decision processes.
20.20.030 Pre-application conferences.
20.20.040 Application requirements.
20.20.050 Notice of complete application to applicant.
20.20.060 Notice of application.
20.20.070 Vesting.
20.20.080 Applications - modifications to proposal.
20.20.090 Notice of decision or recommendation - appeals.
20.20.100 Permit issuance.
20.20.110 Semi-Annual report.
20.20.120 Citizen's guide.
20.20.130 Not Used.

20.20.010 Chapter purpose. The purpose of this chapter is to establish standard procedures for land use permit applications, public notice, hearings and appeals in the City of Sammamish. These procedures are designed to promote timely and informed public participation in discretionary land use decisions; eliminate redundancy in the application, permit review, hearing and appeal processes; provide for uniformity in public notice procedures; minimize delay and expense; and result in development approvals that implement the policies of the Interim Comprehensive Plan. These procedures also provide for an integrated and consolidated land use permit and environmental review process consistent with chapter 347, laws of 1995.

20.20.020 Classifications of land use decision processes. A. Land use permit decisions are classified into four types, based on the amount of discretion associated with each decision. Procedures for the four different types are distinguished according to who makes the decision, whether public notice is required, whether a public hearing is required before a decision is made and whether administrative appeals are provided. The types of land use decisions are listed in Exhibit A of this section.

1. Type 1 decisions are made by the Director, , ("Director") of the DepartmentDepartment of Community Development ("Department"). Type 1 decisions are nonappealable administrative decisions which require the exercise of little or no administrative discretion, except for Type 1 decisions for which the Department has issued a state Environmental Policy Act ("SEPA") threshold determination. Type 1 decisions for which the Department has issued a SEPA threshold determination are appealable at the time of issuance of the SEPA threshold determination to the Hearing Examiner as a Type 2 decision, provided that the appeal is limited to the SEPA

threshold determination and issues relating to zoning code (ISDC Title 21A) compliance excluding compliance with permitted use provisions. However, the decision on the Type 1 permit, exclusive of SEPA threshold determinations issued by the Department and issues

relating to zoning code (ISDC Title 21A) compliance excluding compliance with permitted use provisions, is not appealable to the Hearing Examiner; rather it is appealable to superior court. For the purposes of appealing a Type 1 decision to superior court, the Type 1 decision shall not be considered final until any permitted appeal to the Hearing Examiner is decided. Public notice is not required for Type 1 decisions, except for Type 1 decisions for which the Department has issued a SEPA threshold determination, which are treated like Type 2 decisions for the purposes of public notice.

2. Type 2 decisions are made by the Director, or his or her designee. Type 2 decisions are discretionary decisions which are subject to administrative appeal in accordance with applicable provisions of law or ordinance.

3. Type 3 decisions are quasi-judicial decisions made by the Hearing Examiner following an open record hearing. Type 3 decisions may be appealed to the City Council, based on the record established by the Hearing Examiner.

4. Type 4 decisions are quasi-judicial decisions made by the council based on the record established by the Hearing Examiner.

B. Except as provided in ISDC 20.44.120A.6 and 25.32.080 or unless otherwise agreed to by the applicant, all Type 2,3 and 4 decisions included in consolidated permit applications that would require more than one type of land use decision process may be processed and decided together, including any administrative appeals, using the highest numbered land use decision type applicable to the project application.

C. Certain development proposals are subject to additional procedural requirements beyond the standard procedures established in this chapter.

D. Land use permits that are categorically exempt from review under the state Environmental Policy Act ("SEPA") will not require a threshold determination (determination of nonsignificance ("DNS") or determination of significance ("DS")). For all other projects, the SEPA review procedures codified in ISDC 20.44 are supplemental to the procedures set forth in this chapter.

PROCEDURES FOR LAND USE PERMIT APPLICATIONS
20.20.020
Exhibit A
LAND USE DECISION TYPES

TYPE 1	(Decision by	Building; clearing and grading; boundary line adjustment;

	Director, no administrative appeal)	right of way; road variance except those rendered in conjunction with a short plat decision**; variance from the requirements of ISDC 9.04; shoreline exemption; approval of a conversion harvest plan.
TYPE 2	(Decision by Director appealable to Hearing Examiner, no further administrative appeal)	Short plat; road variance decisions rendered in conjunction with a short plat decision; zoning variance; conditional use permit; temporary use; shoreline substantial development permit; Type 1 decision for which the Department has issued a SEPA threshold determination****; procedural and substantive SEPA decision; site development permit; approval of residential density incentives or transfer of development credits; reuse of public schools; reasonable use exceptions under ISDC 21A.24.070B; preliminary determinations under ISDC20.20.030B; sensitive areas exceptions and decisions to require studies or to approve, condition or deny a development proposal based on the requirements of ISDC 21A.24, extractive operations pursuant to ISDC 21A.22.050; binding site plan
TYPE 3	(Recommendation by Director, hearing and decision by Hearing Examiner, appealable to county council on the record)	Preliminary plat, plat alterations; preliminary plat revisions; Shoreline Substantial Development Permits.
TYPE 4***	(Recommendation by Director hearing and recommendation by Hearing Examiner decision by county council on the record)	Zone reclassifications; shoreline environment redesignation; urban planned development; special use; amendment or deletion of P suffix conditions; plat vacations

* When applications for shoreline permits are combined with other permits requiring Type 3 or 4 land use decisions pursuant to ISDC 25.32.080, the Examiner (not the Director) makes the decision. All shoreline permits, including shoreline variances and conditional uses, are appealable to the state Shorelines Hearings Board and not to the Hearing Examiner.

** The road variance process is administered by the City Engineer pursuant to the City's Street standards.

*** Approvals that are consistent with the Interim Comprehensive Plan may be considered by the City Council at any time. Zone reclassifications which are not consistent with the Interim Comprehensive Plan require a site-specific land use map amendment and the City Council's hearing and consideration will be scheduled with the amendment to the Interim Comprehensive Plan pursuant to ISDC 20.18.040 and 20.18.060.

**** Only the SEPA threshold determination and issues relating to zoning code compliance, excluding compliance with permitted use provisions, may be appealed, upon issuance of the threshold determination; other issues, including those relating to building code compliance, are not appealable.

blank

20.20.030 Pre-application conferences. A. Prior to filing a permit application for a Type 1 decision, the applicant shall contact the Department to schedule a preapplication conference which shall be held prior to filing the application, if the property will have five thousand square feet of development site or right-of-way improvements, the property is in a critical drainage basin, or the property has a wetland, steep slope, landslide hazard, or erosion hazard. Exempt from this requirement are:

1. A single family residence and its accessory buildings;

2. Other structures where all work is in an existing building and no parking is required or added.

B. Prior to filing a permit application requiring a Type 2, 3 or 4 decision, the applicant shall contact the Department to schedule a pre-application conference which shall be held prior to filing the application, except as provided herein. The purpose of the pre-application conference is to review and discuss the application requirements with the applicant and provide comments on the development proposal. The pre-application conference shall be scheduled by the Department, at the request of an applicant, and shall be held in a timely manner, within thirty days from the date of the applicant's request The Director may waive the requirement for a pre-application conference if it is determined to be unnecessary for review of an application. Nothing in this section shall be interpreted to require more than one pre-application conference or to prohibit the applicant from filing an application if the Department is unable to schedule a pre-application conference within thirty days following the applicant's request.

Information presented at or required as a result of the pre-application conference shall be valid for a period of one hundred eighty days following the pre-application conference. An applicant wishing to submit a permit application more than one hundred eighty days following a preapplication for the same permit application shall be required to schedule another preapplication conference.

B. At or subsequent to a preapplication conference, the Department may issue a preliminary determination that a proposed development is not permissible under applicable county policies or regulatory enactments. In that event, the applicant shall have the option to appeal the preliminary determination to the Hearing Examiner in the manner provided for a Type 2 permit, as an alternative to proceeding with a complete application. Mailed and published notice of the appeal shall be provided for as in ISDC 20.20.060G and H.

20.20.040 Application requirements. A. The Department shall not commence review of any application set forth in this chapter until the applicant has submitted the materials and fees specified for complete applications. Applications for land use permits requiring Type 1, 2, 3, or 4 decisions shall be considered complete as of the date of submittal upon determination by the Department that the materials submitted meet the requirements of this section. Except as provided in subsection B of this section, all land use permit applications described in ISDC 20.20.020 Exhibit A shall include the following:

1. An application form provided by the Department and completed by the applicant that allows the applicant to file a single application form for all land use permits requested by the applicant for the development proposal at the time the application is filed;

2. Designation of who the applicant is, except that this designation shall not be required as part of a complete application for purposes of this section when a public agency or public or private utility is applying for a permit for property on which the agency or utility does not own an easement or right-of-way and the following three requirements are met:

a. the name of the agency or private or public utility is shown on the application as the applicant;

b. the agency or private or public utility includes in the complete application an affidavit declaring that notice of the pending application has been given to all owners of property to which the application applies, on a form provided by the Department; and

c. the form designating who the applicant is is submitted to the Department prior to permit approval;

3. A Certificate of Sewer Availability or site percolation data with preliminary approval by the Seattle-King County Department of public health; or for schools located in rural areas, a letter indicating compliance with the tightline sewer provisions in the zoning code, as required by ISDC chapter 13.08 or ISDC chapter 13.24;

4. A current Certificate of Water Availability, if required by ISDC chapter 13.24;

5. A fire district receipt pursuant to ISDC Title 17, if required by ISDC chapter 21A.40;

6. A site plan, prepared in a form prescribed by the Director;

7. Proof that the lot or lots are recognized as separate lots pursuant to the provisions of ISDC chapter 19.04, if required by ISDC 21A.24.090;

8. A sensitive areas affidavit if required by ISDC chapter 21A.24;

9. A completed environmental checklist, if required by ISDC chapter 20.44, State Environmental Policy Act Procedures;

10. Payment of any development permit review fees, excluding impact fees collectible pursuant to ISDC Title 27, Development Permit Fees;

11. A list of any permits or decisions applicable to the development proposal that have been obtained prior to filing the application or that are pending before the City or any other governmental entity;

12. Certificate of transportation concurrency from the City Engineer, if required by ISDC chapter 14.70;

13. Certificate of future connection from the appropriate purveyor for lots located within the urban growth area which are proposed to be served by on-site or community sewage system and/or group B water systems or private well, if required by ISDC 13.24.136 through 13.24.140;

14. A determination if drainage review applies to the project pursuant to K.C.C. chapter 9.04, and, if applicable, all drainage plans and documentation required by the Surface Water Design Manual adopted pursuant to K.C.C. chapter 9.04;

15. Current assessor's maps and a list of tax parcels to which public notice must be given as provided in this chapter, for land use permits requiring a Type 2, 3 or 4 decision;

16. Legal description of the site;

17. Variances obtained or required under ISDC Title 21A to the extent known at the date of application; and

18. For commercial site development permits only, a phasing plan and a time schedule, if the site is intended to be developed in phases or if all building permits will not be submitted within three years.

A permit application is complete for purposes of this section when it meets the procedural submission requirements of the Department and is sufficient for continued processing even though additional information may be required or project modifications may be undertaken subsequently. The determination of completeness shall not preclude the Department from requesting additional information or studies either at the time of notice of completeness or subsequently if new or additional information is required or substantial changes in the proposed action occur, as determined by the Department.

B. Additional complete application requirements for the following land use permits are set forth in the following sections of the King County Code:

1. Clearing and grading permit, ISDC 16.82.060.
2. Construction permits, ISDC 16.04.052.
3. Mobile home permits, ISDC 16.04.093.

C. The Director may specify the requirements of the site plan required to be submitted for various permits and may waive any of the specific submittal requirements listed herein that are determined to be unnecessary for review of an application.

D. The applicant shall attest by written oath to the accuracy of all information submitted for an application.

E. Applications shall be accompanied by the payment of the applicable filing fees, if any, as established by ISDC Title 27.

20.20.050 Notice of complete application to applicant. A. Within twenty-eight days following receipt of a land use permit application, the Department shall mail or provide written notice to the applicant that the application is either complete or incomplete. If the application is incomplete, the notice shall state with specificity what is necessary to make the application complete. To the extent known by the Department, the

notice shall identify other agencies of local, state, regional or federal governments that may have jurisdiction over some aspects of the development proposal.

B. An application shall be deemed complete under this section if the Department does not provide written notice to the applicant that the application is incomplete within the twenty-eight day period as provided herein.

C. If the application is incomplete and the applicant submits the additional information requested by the Department, the Department shall notify the applicant in writing within fourteen days whether the application

is complete or what additional information specified by the Department as provided in subsection A hereof is necessary to make the application complete. An application shall be deemed complete if the Department fails to provide written notice to the applicant within the fourteen day period that the application is incomplete.

D. The date an application is deemed complete is the date of receipt by the Department of all of the information necessary to make the application complete as provided in this chapter. The Department's issuance of a notice of complete application as provided in subsections A or C hereof, or the failure of the Department to provide such a notice as provided in subsections B or C hereof, shall cause an application to be conclusively deemed to be complete and vested as provided in this chapter.

E. The Department may cancel an incomplete application if the applicant fails to submit the additional information required by this chapter within ninety days following notification from the Department that the application is incomplete.

20.20.060 Notice of application. A. A notice of application shall be provided to the public for all land use permit applications requiring Type 2, 3 or 4 decisions or Type 1 decisions subject to SEPA pursuant to this section.

B. Notice of the application shall be provided by the Department within fourteen days following the Department's determination that the application is complete. A public comment period of at least twenty-one days shall be provided, except as otherwise provided in chapter 90.58 RCW. The public comment period shall commence on the fifteenth day following the Department's determination that the application is complete.

C. If the Director has made a determination of significance ("DS") under chapter 43.21 RCW prior to the issuance of the notice of application, the notice of the DS shall be combined with the notice of application and the scoping notice.

D. All required notices of application shall contain the following information:

1. The file number;

2. The name of the applicant;

3. The date of application, the date of the notice of completeness and the date of the notice of application;

4. A description of the project, the location, a list of the permits included in the application and the location where the application and any environmental documents or studies can be reviewed;

5. A site plan on 8 1/2 x 14 inch paper, if applicable;

6. The procedures and deadline for filing comments, requesting notice of any required hearings and any appeal procedure.

7. The date, time, place and type of hearing, if applicable and scheduled at the time of notice.

8. The identification of other permits not included in the application to the extent known.

9. The identification of existing environmental documents that evaluate the proposed project.

10. A statement of the preliminary determination, if one has been made, of those development regulations that will be used for project mitigation and of consistency with applicable City plans and regulations.

E. Notice shall be provided in the following manner:

1. Posted at the project site as provided in subsections F and I hereof;
2. Mailed by first class mail as provided in subsection G hereof; and
3. Published as provided in subsection H hereof.

F. Posted notice for a proposal shall consist of one or more notice boards posted by the applicant within fourteen days following the Department's determination of completeness as follows:

1. A single notice board shall be posted for a project. This notice board may also be used for the posting of the Notice of Decision and Notice of Hearing and shall be placed by the applicant:

a. at the midpoint of the site street frontage or as otherwise directed by the Department for maximum visibility;

b. five feet inside the street property line except when the board is structurally attached to an existing building, provided that no notice board shall be placed more than five feet from the street property without approval of the Department;

c. so that the top of the notice board is between seven to nine feet above grade; and

d. where it is completely visible to pedestrians.

2. Additional notice boards may be required when:

a. the site does not abut a public road;

b. a large site abuts more than one public road; or

c. the Department determines that additional notice boards are necessary to provide adequate public notice.

3. Notice boards shall be:

a. maintained in good condition by the applicant during the notice period through the time of the final City decision on the proposal, including the expiration of any applicable appeal periods, and for decisions which are appealed, through the time of the final resolution of any appeal.

b. in place at least twenty-eight days prior to the date of any required hearing for a Type 3 or 4 decision, or at least fourteen days following the Department's determination of completeness for any Type 2 decision; and

c. removed within fourteen days after the end of the notice period.

4. Removal of the notice board prior to the end of the notice period may be cause for discontinuance of City review until the notice board is replaced and remains in place for the specified time period.

5. An affidavit of posting shall be submitted to the Department by the applicant within fourteen days following the Department's determination of completeness to allow continued processing of the application by the Department.

6. Notice boards shall be constructed and installed in accordance with subsection F, above, and any additional specifications promulgated by the Department pursuant to ISDC chapter 2.98, Rules of City Departments.

G. Mailed notice for a proposal shall be sent by the Department within fourteen days after the Department's determination of completeness:

1. By first class mail to owners of record of property in an area within five hundred feet of the site, provided such area shall be expanded as necessary to send mailed notices to at least twenty different property owners;

2. To any utility which is intended to serve the site;

3. To the state Department of Transportation, if the site adjoins a state highway;

4. To the affected tribes;

5. To any agency or community group which the Department may identify as having an interest in the proposal;

6. Be considered supplementary to posted notice and be deemed satisfactory despite the failure of one or more owners to receive mailed notice; and

7. For preliminary plats only, to all cities within one mile of the proposed preliminary plat.

8. Not Used.

H. Notice of a proposed action shall be published by the Department within fourteen days after the Department's determination of completeness in the official City newspaper.

I. Posted notice for approved formal subdivision engineering plan, clearing or grading permits subject to SEPA or building permits subject to SEPA. Posted notice for approved formal subdivision engineering plans, clearing or grading permits subject to SEPA or building permits subject to SEPA shall be a condition of the plan or permit approval and shall consist of a single notice board posted by the applicant at the project site, prior to construction as follows:

1. Notice boards shall comport with the size and placement provisions identified for construction signs in ISDC 21A.20.120B;

2. Notice boards shall include the following information:

a. permit number and description of the project;

b. projected completion date of the project;

c. a contact name and phone number for both the Department and the applicant; and

d. hours of construction, if limited as a condition of the permit;

3. Notice boards shall be maintained in the same manner as identified above, in subsection F;

4. Notice boards shall remain in place until final construction approval is granted. Early removal of the notice board may preclude authorization of final construction approval.

5. Not Used.

20.20.070 Vesting. A. Applications for Type 1, 2, and 3 land use decisions, except those which seek variance from or exception to land use regulations and substantive and procedural SEPA decisions shall be considered under the zoning and other land use control ordinances in effect on the date a complete application is filed meeting all of the requirements of this chapter. The Department's issuance of a notice of complete application as provided in this chapter, or the failure of the Department to provide such a notice as provided in this chapter, shall cause an application to be conclusively deemed to be vested as provided herein.

B. Supplemental information required after vesting of a complete application shall not affect the validity of the vesting for such application.

C. Vesting of an application does not vest any subsequently required permits, nor does it affect the requirements for vesting of subsequent permits or approvals.

20.20.080 Applications - modifications to proposal. A. Modifications required by the county to a pending application shall not be deemed a new application.

B. An applicant-requested modification occurring either before or after issuance of the permit shall be deemed a new application when such modification would result in a substantial change in a project's review requirements, as determined by the Department.

20.20.090 Notice of decision or recommendation - appeals. A. The Department shall provide notice in a timely manner of its final decision or recommendation on permits requiring Type 2, 3 and 4 land use decisions and Type 1 decisions subject to SEPA, including the threshold determination, if any, the dates for any public hearings and the procedures for administrative appeals, if any. Notice shall be provided to the applicant, to the Department of Ecology and to agencies with jurisdiction if required by ISDC chapter 20.44, to the Department of Ecology and Attorney General as provided in chapter 90.58 RCW, and to any person who, prior to the decision or recommendation, had requested notice of the decision or recommendation or submitted comments. The notice shall also be provided to the public as provided in ISDC 20.20.060.

B. Except for shoreline permits which are appealable to the state Shorelines Hearings Board, all notices of appeal to the Hearing Examiner of Type 2 land use decisions made by the Director shall be filed within fourteen calendar days from the date of issuance of the notice of decision as provided in ISDC 20.24.090; provided that the appeal period shall be extended for an additional seven calendar days if WAC 197-11-340(2)(a) applies.

20.20.100 Permit issuance. A. Final decisions by the county on all permits and approvals subject to the procedures of this chapter shall be issued within one hundred twenty days from the date the applicant is notified by the Department pursuant to this chapter that the application is complete, provided that the following shorter time periods should apply for the type of land use permit indicated:

New residential building permits	90 days
Residential remodels	40 days
Residential appurtenances, such as decks and garages or 40 days for residential appurtenances which require substantial site review.	15 days,
SEPA exempt clearing and grading	45 days
SEPA clearing and grading	90 days
Health Department review (for projects pending a final Department review and/or permit).	40 days

The following periods shall be excluded from this one hundred twenty-day period:

1. Any period of time during which the applicant has been requested by the Department, Hearing Examiner or council to correct plans, perform required studies or provide additional information, including road variances and variances required under K.C.C. chapter 9.04. The period shall be calculated from the date of notice to the applicant of the need for additional information until the earlier of the date the City advises the applicant that the additional information satisfies the City's request, or fourteen days after the date the information has been provided. If the City determines that the correction, study or other information submitted by the applicant is insufficient, it shall notify the applicant of the deficiencies and the procedures of this section shall apply as if a new request for information had been made.

a. The Department shall set a reasonable deadline for the submittal of corrections, studies or other information when requested, and shall provide written notification to the applicant. An extension of such deadline may be granted upon submittal by an applicant of a written request providing satisfactory justification of an extension.

b. Failure by the applicant to meet such deadline shall be cause for the Department to cancel/deny the application.

c. When granting a request for a deadline extension, the Department shall give consideration to the number of days between receipt by the Department of a written request for a deadline extension and the mailing to the applicant of the Department's decision regarding that request.

2. The period of time, as set forth in ISDC 20.44.050, during which an environmental impact statement is being prepared following a determination of significance pursuant to chapter 43.21C RCW.

3. A period of no more than ninety days for an open record appeal hearing by the Hearing Examiner on a Type 2 land use decision, and no more than sixty days for a closed record appeal by the county council on a Type 3 land use decision appealable to the county council, except when the parties to an appeal agree to extend these time periods.

4. Any period of time during which an applicant fails to post the property, if required by this chapter, following the date notice is required until an affidavit of posting is provided to the Department by the applicant.

5. Any time extension mutually agreed upon by the applicant and the Department.

B. The time limits established in this section shall not apply if a proposed development:

1. Requires an amendment to the comprehensive plan or a development regulation, or modification or waiver of a development regulation as part of a demonstration project;

2. Requires approval of a new fully contained community as provided in RCW 36.70A.350 master planned resort as provided in RCW 36.70A.360 or the siting of an essential public facility as provided for RCW 36.70A.200; or

3. Is substantially revised by the applicant, when such revisions will result in a substantial change in a project's review requirements, as determined by the Department, in which case the time period shall start from the date at which the revised project application is determined to be complete.

C. If the Department is unable to issue its final decision within the time limits established by this section, it shall provide written notice of this fact to the project applicant. The notice shall include a statement of reasons why the time limits have not been met and an estimated date for issuance of the notice of final decision.

D. Not Used.

20.20.110 Semi-Annual report. Beginning January 1, 2000 and continuing semi-annually thereafter, the Director shall prepare a quarterly report to the City Council

detailing the length of time required to process applications for Type 1, 2, 3, and 4 land use decisions in the previous period, categorized both on average and by type of permit. The report shall provide commentary on Department operations and identify any need for clarification of City policy or development regulations or process.

20.20.120 Citizen's guide. The Director shall issue a citizen's guide to permit processing including making an appeal or participating in a hearing.

20.20.130 Not Used.

Chapter 20.24
EXAMINERHEARING EXAMINER

Sections:

20.24.010 Chapter purpose.
20.24.020 Office created.
20.24.030 Appointment and terms.
20.24.040 Removal.
20.24.050 Qualifications.
20.24.060 Deputy Examiner duties.
20.24.065 Pro tem Examiners.
20.24.070 Recommendations to the council.
20.24.072 Type 3 decisions by the Examiner, appealable to the council.
20.24.080 Final decisions by the Examiner.
20.24.090 Notice of appeal to Examiner-filing.
20.24.095 Dismissal of untimely appeals.
20.24.097 Expeditious processing.
20.24.098 Time limits.
20.24.100 Condition, modification and restriction examples.
20.24.110 Quasi-judicial powers.
20.24.120 Freedom from improper influence.
20.24.130 Public hearing.
20.24.140 Consolidation of hearings.
20.24.145 Pre-hearing conference.
20.24.150 Report by Department.
20.24.160 Notice.
20.24.170 Rules and regulations.
20.24.175 Case management techniques.
20.24.180 Examiner findings.
20.24.190 Additional Examiner findings - reclassifications and shoreline redesignations.
20.24.195 Additional Examiner findings - preliminary plats.
20.24.197 Additional Examiner findings and recommendations school capacities.
20.24.210 Written recommendation or decision.
20.24.220 Appeal to council - recommendation.
20.24.222 Appeal to council - Examiner's decision.
20.24.230 Council action.
20.24.235 Findings - preliminary plats.
20.24.240 Judicial review of final decisions.
20.24.250 Reconsideration of final action.
20.24.300 Digest of decisions.
20.24.310 Citizens guide.
20.24.320 Semi-annual report.
20.24.330 Voluntary mediation.
20.24.400 Site-specific land use map amendment.
20.24.500 Chapter re-enacted.

20.24.010 Chapter purpose. The purpose of this chapter is to provide a system of considering and applying regulatory devices which will best satisfy the following basic needs:

A. The need to separate the application of regulatory controls to the land from planning;

B. The need to better protect and promote the interests of the public and private elements of the community;

C. The need to expand the principles of fairness and due process in public hearings.

20.24.020 Office created. The office of ExaminerHearing Examiner is created. The Examiner shall act on behalf of the City Council in considering and applying adopted City policies and regulations as provided herein.

20.24.030 Appointment and terms. The City Council shall appoint the Examiner to serve in said office for a term of four years. 20.24.040 Removal. The Examiner may be removed from office at any time by the affirmative vote of not less than four members of the City Council for just cause.

20.24.050 Qualifications. The Examiner shall be appointed solely with regard to his or her qualifications for the duties of the office and shall have such training or experience as will qualify him or her to conduct administrative or quasi-judicial hearings on regulatory enactments and to discharge the other functions conferred upon hime or her, and shall hold no other appointive or elective public office or position in the City government except as provided herein.

EXAMINER

20.24.060 ExaminerExaminerExaminerExaminerExaminerNot Used.

20.24.065 Pro tem Examiners. The City Council may appoint qualified persons to serve as Hearing Examiner pro tempore, as needed, to expeditiously hear pending applications and appeals.

20.24.070 Recommendations to the council. A. The Examiner shall receive and examine available information, conduct open record public hearings and prepare records and reports thereof and issue recommendations, including findings and conclusions to the council based on the issues and evidence in the record in the following cases:

1. Not Used.
2. All Type 4 land use decisions;
3. Not Used.
4. Not Used.
5. Not Used.
6. Not Used.
7. Not used.
8. Not Used.
9. Not Used.
10. Not Used.
11. Other applications or appeals which the City Council may prescribe by ordinance.

B. The Examiner's recommendation may be to grant or deny the application or appeal, or the Examiner may recommend that the City Council adopt the application or appeal with such conditions, modifications and restrictions as the Examiner finds necessary to carry out applicable state laws and regulations and the regulations, including chapter 43.21C RCW, policies, objectives and goals of the Interim Comprehensive Plan, neighborhood plans, the zoning code, the subdivision code and other official laws, policies and objectives of the City of Sammamish.

20.24.072 Type 3 decisions by the Examiner, appealable to the City Council.

A. The Examiner shall receive and examine available information, conduct open record public hearings and prepare records and reports thereof, and issue decisions on Type 3 land use permit applications, including findings and conclusions, based on the issues and evidence in the record. The decision of the Examiner on Type 3 land use permit applications shall be appealable to the City Council on the record established by the Examiner as provided by ISDC 20.24.210D.

B. The Examiner's decision may be to grant or deny the application, or the Examiner may grant the application with such conditions, modifications and restrictions as the Examiner finds necessary to carry out applicable state laws and regulations, including chapter 43.21C RCW, and the regulations, policies, objectives and goals of the Interim Comprehensive Plan, or neighborhood plans, the zoning code, the subdivision code and other official laws, policies and objectives of the City of Sammamish.

20.24.080 Final decisions by the Examiner. A. The Examiner shall receive and examine available information, conduct open record public hearings and prepare records and reports thereof, and issue final decisions, including findings and conclusions, based on the issues and evidence in the record, which shall be appealable to superior court as provided by ISDC 20.24.240, or to other designated authority in the following cases:

1. Appeals from the decisions of the Director for short subdivisions, including those variance decisions of the City Engineer made pursuant to ISDC 14.42.060 with regard to circulation in the subject
short divisions;

2. Appeals of all Type 2 land use decisions with the exception of appeals of shoreline permits including shoreline variances and conditional uses which are appealable to the state Shoreline Hearings Board;

3. Appeals from citations, notices and orders and stop work orders issued pursuant to Title 23 of this code. 4. Appeals from decisions regarding the abatement of a nonconformance;

5. Not Used.

6. Appeals from public safety seizures and intended forfeitures, when properly designated by the chief law enforcement officer Department as provided in RCW 69.50.505;

7. Not Used.

8. Appeals from the Department's final decisions regarding transportation concurrency, mitigation payment system and intersection standards provisions of ISDC Title 14;

9. Not Used.

10. Other applications or appeals which the City Council may prescribe by ordinance.

B. The Examiner's decision may be to grant or deny the application or appeal, or the Examiner may grant the application or appeal with such conditions, modifications and restrictions as the Examiner finds necessary to make the application or appeal compatible with the environment and carry out applicable state laws and regulations, including chapter 43.21C RCW, and the regulations, policies, objectives and goals of the Interim Comprehensive Plan, or neighborhood plans, the zoning code, the

EXAMINERHEARING EXAMINER

subdivision code and other official laws, policies and objectives of the City of Sammamish.

20.24.090 Notice of appeal to Examiner - filing. A. Except as otherwise provided herein, all notices of appeal to the Examiner shall be filed with the CityDepartment issuing the original decision with a copy provided by the Department to the office of the hearing Except as otherwise provided herein, notice of appeal, together with the required appeal fee, shall be filed within fourteen calendar days from the date of issuance of such decisions. In cases of appeals of Type 2 land use decisions made by the Director, the appeal period shall be extended for an additional seven calendar days if WAC 197-11-340(2)(a) applies.

B. Not Used.

C. If a notice of appeal has been filed within the time period provided herein, the appellant shall file a statement of appeal with the City Department issuing the original decision or action within twenty-one calendar days from the date of issuance of such decision or action. Department staff shall:

1. Be available within a reasonable time to persons wishing to file a statement of appeal subsequent to an agency ruling, and to respond to queries concerning the facts and process of the City decision; and

2. Make available within a reasonable time a complete set of files detailing the facts of the Department ruling in question to persons wishing to file a statement of appeal, subsequent to an agency ruling. If a Department is unable to comply with these provisions, the ExaminerHearing Examiner may authorize amendments to a statement of appeal to reflect information not made available to an appellant within a reasonable time due to a failure by the Department to meet the foregoing requirements. The statement of appeal shall identify the decision being appealed and the alleged errors in that decision. Further, the statement of appeal shall state specific reasons why the decision should be reversed or modified; and the harm suffered or anticipated by the appellant, and the relief sought. The scope of an appeal shall be based principally on matters or issues raised in the statement of appeal. Failure to timely file a notice of appeal, appeal fee or statement of appeal deprives the Examiner of jurisdiction to consider the appeal

20.24.095 Dismissal of untimely appeals. On its own motion, or on the motion of a party, the Examiner shall dismiss an appeal for untimeliness or lack of jurisdiction.

20.24.097 Expeditious processing. A. Hearings shall be scheduled by the Examiner to ensure that final decisions are issued within the time periods provided in ISDC 20.20.100. During periods of time when the volume of permit activity is high, the City shall retain one or more pro-tem Examiners to ensure that the one hundred twenty day time period for final decisions is met.

B. Appeals shall be processed by the Examiner as expeditiously as possible, giving appropriate consideration to the procedural due process rights of the parties. Unless a longer

period is agreed to by the parties, or the Examiner determines that the size and scope of the project is so compelling that a longer period is required, a pre-hearing conference or a public hearing shall occur within forty-five days from the date the office of the ExaminerHearing Examiner is notified that a complete statement of appeal has been filed. In such cases where the Examiner has determined that the size and scope warrant such an extension, the reason for the deferral shall be stated in the Examiner's recommendation or decision. The time period may be extended by the Examiner at the Examiner's discretion for not more than thirty days. (Ord. 12196 § 28, 1996: Ord. 11502 § 14, 1994).

20.24.098 Time limits. In all matters where the Examiner holds a hearing on applications under ISDC 20.24.070, the hearing shall be completed and the Examiner's written report and recommendations issued within twenty-one days from the date the hearing opens, excluding any time required by the applicant or the Department to obtain and provide additional information requested by the Hearing Examiner and necessary for final action on the application consistent with applicable laws and regulations. In every appeal heard by the Examiner pursuant to ISDC 20.24.080, the appeal process, including a written decision, shall be completed within ninety days from the date the Examiner's office is notified of the filing of a notice of appeal pursuant to ISDC 20.24.090. When reasonably required to enable the attendance of all necessary parties at the hearing, or the production of evidence, or to otherwise assure that due process is afforded and the objectives of this chapter are met, these time periods may be extended by the Examiner at the Examiner's discretion for an additional thirty days. With the consent of all parties, the time periods may be extended indefinitely. In all such cases, the reason for such deferral shall be stated in the Examiner's recommendation or decision. Failure to complete the hearing process within the stated time shall not terminate the jurisdiction of the Examiner.

20.24.100 Condition, modification and restriction examples. The Examiner is authorized to impose conditions, modifications and restrictions, including but not limited to setbacks, screenings in the form of landscaping or fencing, covenants, easements, street improvements and dedications of additional street right-of-way and performance bonds as authorized by City ordinances.

20.24.110 Quasi-judicial powers. The Examiner may also exercise administrative powers and such other quasi-judicial powers as may be granted by City ordinance.

20.24.120 Freedom from improper influence. Individual councilmembers, City officials or any other person, shall not interfere with or attempt to interfere with the Examiner in the performance of his or her designated duties.

20.24.130 Public hearing. When it is found that an application meets the filing requirements of the responsible City Department or an appeal meets the filing rulesExaminer, it shall be accepted and a date assigned for public hearing. If for any reason testimony on any matter set for public hearing, or being heard, cannot be completed on the date set for such hearing, the matter shall be continued to the soonest available date. A matter should be heard, to the extent practicable, on consecutive days until it is concluded. For purposes of proceedings identified in ISDC 20.24.070 and 20.24.072, the public hearing by the Examiner shall constitute the hearing by the City Council.

20.24.140 Consolidation of hearings. Whenever a project application includes more than one City permit, approval or determination for which a public hearing is required or for which an appeal is provided pursuant to this chapter, the hearings and any such appeals may be consolidated into a single proceeding before the Hearing Examiner pursuant to ISDC 20.20.020.

20.24.145 Pre-hearing conference. A pre-hearing conference may be called by the Examiner pursuant to this chapter upon the request of a party, or
on the Examiner's own motion. A pre-hearing conference shall be held in every appeal brought pursuant to this chapter if timely requested by any party. The pre-hearing conference shall be held at such time as ordered by the Examiner, but not less than fourteen days prior to the scheduled hearing on not less than seven days notice to those who are then parties of record to the proceeding. The purpose of a pre-hearing conference shall be to identify to the extent possible, the facts in dispute, issues, laws, parties and witnesses in the case. In addition the pre-hearing conference is intended to establish a timeline for the presentation of the case. The Examiner shall establish rules for the conduct of pre-hearing conferences.

Any party who does not attend the pre-hearing conference, or anyone who becomes a party of record after notice of the pre-hearing conference has been sent to the parties, shall nevertheless be entitled to present testimony and evidence to the Examiner at the hearing.

20.24.150 Not Used.

20.24.160 Notice. A. Notice of the time and place of any hearing on an application before the Hearing Examiner pursuant to this chapter shall be mailed by first class mail at least fourteen calendar days prior to the scheduled hearing date to all persons who commented or requested notice of the hearing. The notice of decision or recommendation required by ISDC Title 20 may be combined with the notice of hearing required hereby.

B. Notice of the time and place of any appeal hearing before the Hearing Examiner pursuant to this chapter shall be mailed to all parties of record by first class mail at least fourteen calendar days prior to the scheduled hearing date.

C. If testimony cannot be completed prior to adjournment on the date set for a hearing, the Examiner shall announce prior to adjournment the time and place said hearing will be continued.

20.24.170 Rules and conduct of hearings. The Examiner shall adopt rules for the conduct of hearings and for any mediation process consistent with this chapter. The rules shall be reviewed by the City
Council, and remain in effect during this review. Any modifications made by the Council by motion shall be incorporated by the Hearing Examiner, and shall become effective ten days after adoption of the motion. Such rules shall be published and available upon request to all interested parties. The Examiner shall have the power to issue summons and subpoena to compel the appearance of witnesses and production of documents and materials, to order discovery, to administer oaths, and to preserve order.

To avoid unnecessary delay and to promote efficiency of the hearing process, the Examiner shall limit testimony, including cross examination, to that which is relevant to the matter being heard, in light of adopted county policies and regulations, and shall exclude evidence and cross examination that is irrelevant, cumulative or unduly repetitious. The Examiner may establish reasonable time limits for the presentation of direct oral testimony, cross examination and argument. Any written submittals will be admitted only when authorized by the Examiner under pertinent and promulgated administrative rules.

20.24.175 Not Used.

20.24.180Examiner findings. When the Examiner renders a decision or recommendation is consistent with, carries out and helps implement applicable state laws and regulations and the regulations, policies, objectives and goals of the Interim Comprehensive Plan, , the zoning code, and other official laws, policies and objectives of the City of Sammamish, and that the recommendation or decision will not be unreasonably incompatible with or detrimental to affected properties and the general public.

20.24.190 Additional Examiner findings - reclassifications and shoreline redesignations. When the Examiner issues a recommendation regarding an application for a reclassification of property or for a shoreline environment redesignation, the recommendation shall include additional findings which support the conclusion that at least one of the following circumstances applies:

A. The property is potentially zoned for the reclassification being requested and conditions have been met which indicate the reclassification is appropriate; or

B. The adopted Interim Comprehensive Plan or zoning specifies that the property shall be subsequently considered through an individual reclassification application.

C. Not Used.

D. The applicant has demonstrated with substantial evidence that:

1. Since the last previous area zoning or shoreline environment designation of the subject property, authorized public improvements, permitted private development or other conditions or circumstances affecting the subject property have undergone substantial and material change not anticipated or contemplated in the plan or zoning;

2. The impacts from the changed conditions or circumstances affect the subject property in a manner and to a degree different than other properties in the vicinity such that area rezoning or redesignation is not appropriate; and

3. The requested reclassification or redesignation is required in the public interest.

20.24.195 Additional Examiner findings - preliminary plats. When the Examiner makes a decision regarding an application for a proposed preliminary plat, the decision shall include additional findings as to whether:

A. Appropriate provisions are made for the public health, safety, and general welfare and for such open spaces, drainage ways, streets or roads, alleys, other public ways, transit stops, potable water supplies, sanitary wastes, parks and recreation, playgrounds, schools and school grounds and all other relevant facts, including sidewalks and other planning features that assure safe walking conditions for students who only walk to and from school; and

B. The public use and interest will be served by the platting of such subdivision and dedication.

20.24.197 Additional Examiner findings and recommendations - school capacities. Whenever the Examiner in the course of conducting hearings or reviewing preliminary plat applications or actualization of potential multi-family zoning, receives documentation that the public schools in the district where the development is proposed would not meet the standards set out in ISDC 21A.28.160 if the development were approved, the Examiner shall remand to the Department to require or recommend phasing or provision of the needed facilities and sites as appropriate to address the deficiency, or deny the proposal if required by the provisions of this chapter. The Examiner shall prepare findings to document the facts which support the action taken. The Examiner shall recommend such phasing as may be necessary to coordinate the development of the housing with the provision of sufficient school facilities, or in the alternative shall require the provision of the needed facilities. An offer of payment of a

school impact fee as required by ordinance shall not be a substitute for such phasing, but the fee is still assessable. The Examiner shall recommend a payment schedule for the fee to coordinate the payment with the phasing of an impact mitigation fee if such provision or payment is satisfactory to the district. The Examiner must determine independently that the conditions of approval and assessable fees will provide for adequate schools.

20.24.210 Written recommendation or decision. A. Within ten days of the conclusion of a hearing or rehearing, the Examiner shall render a written recommendation or decision and shall transmit a copy thereof to all persons of record. The Examiner's decision shall identify the applicant and/or the owner by name and address.

B. Recommendations of the Examiner in cases identified in ISDC 20.24.070 may be appealed to the council by an aggrieved party by filing a notice of appeal with the City Clerk within fourteen calendar days of the date the Examiner's written recommendation is mailed.

C. If no appeal is filed within fourteen calendar days, the City Clerk shall place a proposed ordinance which implements the Examiner's recommended action on the agenda of the next

available City Council meeting for adoption; provided, that no final action to amend or reverse the Hearing Examiner's recommendation shall be taken at that meeting and notice to parties shall be given before the adoption of a substitute or amended ordinance which amends or reverses the Examiner's recommendation;

provided further, the City Council by motion may remand to the Examiner for the purpose of further hearing, receipt of additional information or further consideration when determined necessary prior to the City Council's taking final action thereon.

D.Decisions of the Examiner, that are appealable to the City Council as provided in ISDC 20.24, shall be final unless appealed to the City Council by an aggrieved party of record by filing a notice of appeal with the City Clerk within fourteen calendar days of the date the Examiner's written decision is mailed.

E. Decisions of the Examiner in cases identified in ISDC 20.24.080 shall be final and reviewable pursuant to ISDC 20.24.240B.

20.24.220 Appeal to council - recommendation. A. If an appeal has been filed pursuant to ISDC 20.24.210B, the appellant shall file with the City Clerk within twenty-one calendar days of the date of the Examiner's written recommendation a written appeal statement specifying the basis for the appeal and any arguments in support of the appeal. If no written appeal statement or arguments are filed within the twenty-one calendar days, the City Clerk shall place a proposed ordinance which implements the Examiner's recommended action on the agenda of the next available City Council meeting. If written appeal arguments are filed, the City Clerk shall cause notice to be given to other parties of record that a notice of appeal and appeal statement have been filed and that written appeal statements or arguments in response thereto may be submitted to the Clerk within fourteen calendar days of the date of such notification by the Clerk.

B. Consideration by the City Council of the appeal, shall be based upon the record as presented to the Examiner at the public hearing and upon written appeal statements based upon the record; provided, the City Council also may allow parties a period of time for oral argument based on the record. The Examiner may conduct a conference with all parties to the appeal for the purpose of clarifying or attempting to resolve certain issues on appeal; provided, that the Examiner who conducted the public hearing on the proposal may not conduct the conference. Such conference shall be informal and shall not be part of the public record.

C.If, after consideration of the record, written appeal statements and any oral argument the City Council determines that:

1. An error in fact or procedure may exist or additional information or clarification is desired, the Council shall remand the matter to the Examiner; or

2. The recommendation of the Examiner is based on an error in judgment or conclusion, the Council may modify or reverse the recommendation of the Examiner; provided, the City Council may remand to the Examiner for the purpose of further hearing, receipt of additional information or further consideration when determined necessary prior to the council's taking final action thereon.

D.Not Used.

20.24.222 Appeal to council - Examiner's decision. If an appeal has been filed pursuant to ISDC 20.24.210D, the appellant shall file with the City Clerk within twenty-one calendar days of the date of the Examiner's written decision a written appeal statement specifying the basis for the appeal and any arguments in support of the appeal. If no written appeal statement or arguments are filed within the twenty-one calendar days, the Hearing Examiner's decision made pursuant to ISDC 20.24.070 shall be deemed final and conclusive action. If written appeal arguments are filed, the City Council shall cause notice to be given to other parties of record that a notice of appeal and appeal statement have been filed and that written appeal statements or arguments in response thereto may be submitted to the Clerk within fourteen calendar days of the date of such notification by the clerk.

Consideration by the City Council of the appeal shall be based upon the record as presented to the Examiner at the public hearing and upon written appeal statements based upon the record; provided, the Copuncil also may allow parties a period of time for oral argument based on the record. The Examiner may conduct a conference with all parties to the appeal for the purpose of

clarifying or attempting to resolve certain issues on appeal, provided, that the Examiner who conducted the public hearing on the proposal may not conduct the conference. Such conference shall be informal and shall not be part of the public record.

If, after consideration of the record, written appeal statements and any oral argument the Council determines that:

A. Additional information or clarification is required, the Council shall remand the matter to the Examiner; or

B. The decision of the Examiner is based on an error in judgment or conclusion, the Council may modify or reverse the recommendation of the Examiner; provided, the City Council may remand to the Examiner for the purpose of further hearing, receipt of additional information or further consideration when determined necessary prior to the City Council's taking final action thereon.

Appeals shall be processed by the City Council as expeditiously as possible, giving appropriate consideration to the procedural due process rights of the parties. Consideration of the appeal by the Council shall be scheduled to ensure that such appeals are processed within the time periods provided in ISDC 20.20.100. Failure of the Council to determine an appeal within applicable time limits shall not terminate the jurisdiction of the Council. 20.24.230 City Council action. The City Council shall take final action on any recommendation of the Examiner or appeal from a decision by the Examiner by ordinance and when so doing, it shall make and enter findings of fact and conclusions from the record of the public hearing conducted by the Examiner. Said findings and conclusions shall set forth and demonstrate the manner in which the action is consistent with, carries out and helps implement applicable state laws and regulations and the regulations, policies, objectives and goals of the Interim Comprehensive Plan, the zoning code, the subdivision code and other official laws, policies and objectives for the development of the City of Sammamish. The City Council may adopt as its own all or portions of the Examiner's findings and conclusions.

Any ordinance may contain conditions regarding the manner of development or other aspects regarding use of the property including but not limited to dedication of land, provision of public improvements to serve the subdivision, and/or impact fees authorized by RCW 82.02.

Any ordinance also may contain reasonable conditions, in accordance with state law and City ordinances, which must be satisfied before the ordinance becomes effective and the official zoning maps shall not be amended until said conditions have been satisfied; provided, the ordinance shall also designate the time period within which any such conditions must be satisfied. All authority pursuant to such ordinance shall expire if any of said conditions are not satisfied within the designated time period and the property shall continue to be subject to all laws, regulations and zoning as if the ordinance had not been adopted; provided, the City Council may extend the period for satisfaction of said conditions if after a public hearing by the Examiner the Council finds an extension will be in the public interest and the extension was requested by applicant within the initial time period. As an alternative to the adoption of an ordinance containing conditions, the Council may adopt an ordinance subject to the execution of a concomitant agreement between the City and the applicant regarding the manner of development of the property, any required improvements or any aspect regarding use of the property. 20.24.235

Findings - preliminary plats. A. In addition to the provisions of ISDC 20.24.230 the City Council shall not approve a proposed subdivision and dedication unless it finds that:

1. Appropriate provisions are made for the public health, safety, and general welfare and for such open spaces, drainage ways, streets or roads, alleys, other public ways, transit stops, potable water supplies, sanitary wastes, parks and recreation, playgrounds, schools and school grounds and all other relevant facts, including sidewalks and other planning features that assure safe walking conditions for students who only walk to and from school; and

2. The public use and interest will be served by the platting of such subdivision and dedication.

B. If it finds that the proposed subdivision and dedication make such appropriate provisions and that the public use and interest will be served, then the City Council shall approve the proposed subdivision and dedication. Dedication of land to any public body, provision of public improvements to serve the subdivision, and/or impact fees may be required as a condition of subdivision approval. Dedications shall be clearly shown on the final plat.

The City Council may adopt as its own all or portions of the Examiner's findings and conclusions.

20.24.240 Judicial review of final decisions. A. Decisions of the City Council in cases identified in ISDC 20.24.070 or in cases appealed to the Council as provided in ISDC 20.24.210D, shall be final and conclusive action unless within twenty-one calendar days from the date of the City Council's adoption of an ordinance an appeal is filed in superior court, state of Washington, for the purpose of review of the action taken; provided, no development or related action may occur during the twenty-one day appeal period.

B. Decisions of the Examiner in cases identified in ISDC 20.24.080 shall be a final and conclusive action unless within twenty-one calendar days from the date of issuance of the Examiner's decision an aggrieved person files an appeal in superior court, state of Washington, for the purpose of review of

the action taken; provided, no development or related action may occur during the twenty-one day appeal period; provided further, that the twenty-one day appeal period from Examiner decisions on appeals of threshold determinations or the adequacy of a final EIS shall not commence until final action on the underlying proposal.

C. Prior to filing an appeal of a final decision for a conditional use permit or special use permit, requested by a party that is licensed or certified by the Washington state Department of social and health services or the Washington state Department of corrections, an aggrieved party (other than a county, city or town) must comply with the mediation requirements of chapter 35.63 RCW (chapter 119, Laws of 1998). The time limits for appealing a final decision are tolled during the mediation process.

20.24.250 Reconsideration of final action. A. Any final action by the City Council or Hearing Examiner may be reconsidered by the Council or Examiner, respectively if:

1. The action was based in whole or in part on erroneous facts or information;
2. The action when taken failed to comply with existing laws or regulations applicable thereto; or
3. An error of procedure occurred which prevented consideration of the interests of persons directly affected by the action.

B. The Council upon reconsideration shall review the matter pursuant to the procedures and authority for appeals pursuant to ISDC 20.24.220.

C. The Examiner shall reconsider a final decision pursuant to the rules of the ExaminerHearing Examiner.

D. Authority of the Council and Examiner to reconsider does not affect the finality of a decision when made.

20.24.300 Digest of decisions. The Department shall maintain and publish on a quarterly basis a digest of all decisions and recommendations of the Examiner. Decisions reported in the digest shall not be construed to establish any legal precedent.

20.24.310 Citizens guide. The Derpartment shall issue a citizen's guide on the office of Hearing Examiner including making an appeal or participating in a hearing.

20.24.320 Semi-annual report. The Hearing Examiner shall prepare a semi-annual report to the City Council detailing the length of time required for hearings in the previous six months, categorized both on average and by type of proceeding. The report shall provide commentary on Examiner operations and identify any need for clarification of City policy or development regulations. The semi-annual report shall be presented to the Council by March 1st and September 1st of each year.

20.24.330 Voluntary mediation. As to any application or appeal pursuant to ISDC 20.24 which is or could become the subject of a public hearing, the responsible county Department, the City Council or the Hearing Examiner, may at their own discretion or at the request of the applicant or any person with standing to the application or appeal, at any state of the proceedings on the

application or appeal, initiate a mediation process to resolve disputes as to such application or appeal. The mediation process shall be voluntarily agreed to by all participants to the hearing process, and conducted by an independent impartial mediator who shall not be a City employee or any person who will have any role in making any recommendation or decision on the application or appeal. The mediation shall be conducted in accordance with rules of mediation prepared by the Hearing Examiner.

20.24.400 Site-specific land use map amendment. Upon initiation of a site-specific land use map amendment to the Interim Comprehensive Plan pursuant to ISDC 20.18.050, the Hearing Examiner shall conduct a public hearing to consider the report and recommendation of the Department and to take testimony and evidence relating to the proposed amendment. The Hearing Examiner may consolidate hearings pursuant to ISDC 20.24.140 to the extent practical. Following the public hearing, the

Hearing Examiner shall complete a report within thirty days which contains written findings and conclusions regarding the proposed amendment's qualification for annual review consideration, and consistency or lack of consistency with the applicable review criteria. An annual report containing all site specific land use map amendment reports which have been completed shall be compiled by the Hearing Examiner and submitted to the Council by January 15 of the following year.

20.24.500 Not Used.

Chapter 20.44

STATE ENVIRONMENTAL POLICY ACT PROCEDURES.

Sections:

20.44.010 Definitions and abbreviations.
20.44.020 Lead agency.
20.44.030 Purpose and general requirements.
20.44.040 Categorical exemptions and threshold determinations.
20.44.042 Planned actions.
20.44.050 Environmental impact statements and other environmental documents.
20.44.060 Comments and public notice.
20.44.070 Use of existing environmental documents.
20.44.080 Substantive authority.
20.44.085 SEPA/GMA Integration.
20.44.090 On going actions.
20.44.100 Responsibility as consulted agency.
20.44.120 Appeals.
20.44.130 Department procedural rules.
20.44.140 Severability.
20.44.145 Not Used

20.44.010 Definitions and abbreviations. A. The City of Sammamish adopts by reference the definitions contained in WAC 197-11-700 through 197-11-799.
In addition, the following definitions are adopted for this chapter:

1. "City Council" means the Sammamish City Council
2. "Department" means the City of Sammamish Department of Community Development
3. Not Used.
4. "Director" means the Director of the Department of Community Development.

B. The following abbreviations are used in this chapter:

1. SEPA -- State Environmental Policy Act
2. DNS -- Determination of Non-Significance
3. DS -- Determination of Significance
4. EIS -- Environmental Impact Statement

20.44.020 Lead agency. The procedures and standards regarding lead agency responsibility contained in WAC 197-11-050 and WAC 197-11-922 through 197-11-948 are adopted, subject to the following:

A. Not Used
B. Not Used.

C. Not Used.

D. The Department shall serve as the Lead Agency and the Director shall serve as the Responsible Official for all SEPA activity by the City of Sammamish.

20.44.030 Purpose and general requirements. The procedures and standards regarding the timing and content of environmental review specified in WAC 197-11-055 through 197-11-100 are adopted subject to the following:

A. Pursuant to WAC 197-11-055(4), the Department shall adopt rules and regulations pursuant to ISDC 2.98 establishing a process for environmental review at the conceptual stage of permit applications which require detailed project plans and specifications (i.e., building permits and PUD's). This process shall not become effective until it has been reviewed by the Council.

B. The optional provision of WAC 197-11-060(3)(c) is adopted.

C. Under WAC 197-11-100, the applicant shall prepare the initial environmental checklist, unless the lead agency specifically elects to prepare the checklist. The lead agency shall make a reasonable effort to verify the information in the environmental checklist and shall have the authority to determine the final content of the environmental checklist.

D. The Director may set reasonable deadlines for the submittal of information, studies, or documents necessary for, or subsequent to, threshold determinations. Failure to meet such deadlines shall cause the application to be deemed withdrawn, and plans or other data previously submitted for review may be returned to the applicant together with any unexpended portion of the application review fees.

20.44.040 Categorical exemptions and threshold determinations. A. The City of Sammamish adopts the standards and procedures specified in WAC 197-11-300 through 197-11-390 and 197-11-800 through 197-11-890 for determining categorical exemptions and making threshold determinations subject to the following:

1. The following exempt threshold levels are hereby established pursuant to WAC 197-11-800(1)(c) for the exemptions in WAC 197-11-800(1)(b):

a. The construction or location of any residential structures of eight dwelling units;

b. Not Used.

c. The construction of an office, school, commercial, recreational, service or storage building with 12,000 square feet of gross floor area, and with associated parking facilities designed for forty automobiles;

d. The construction of a parking lot designed for forty automobiles;

e. Any fill or excavation of 500 cubic yards throughout the total lifetime of the fill or excavation: provided, however, (i) that the categorical exemption threshold shall be 100 cubic yards for any fill or excavation that is in a sensitive area, and (ii) that if the proposed action is to remove from or replace fill in a sensitive area to correct a violation, the threshold shall be 500 cubic yards.

2. The determination of whether a proposal is categorically exempt shall be made by the Department.

B. The mitigated DNS provision of WAC 197-11-350 shall be enforced as follows:

1. If the Department issues a mitigated DNS, conditions requiring compliance with the mitigation measures which were specified in the application and environmental checklist shall be deemed conditions of any decision or recommendation of approval of the action.

2. If at any time the proposed mitigation measures are withdrawn or substantially changed, the Responsible Official shall review the threshold determination and, if necessary, may withdraw the mitigated DNS and issue a DS.

20.44.042 Planned actions. The procedures and standards of WAC 197-11-164 through WAC 197-11-172 are adopted regarding the designation of planned actions.

20.44.050 Environmental impact statements and other environmental documents. The procedures and standards for preparation of environmental impact statements and other environmental documents

pursuant to WAC 197-11-400 through 197-11-460 and 197-11-600 through 197-11-640 are adopted, subject to the following:

A. Pursuant to WAC 197-11-408(2)(a), all comments on determinations of significance and scoping notices shall be in writing, except where a public meeting on EIS scoping occurs pursuant to WAC 197-11-410(1)(b).

B. Pursuant to WAC 197-11-420, 197-11-620, and 197-11-625, the Department shall be responsible for preparation and content of EIS's and other environmental documents. The Department shall contract with consultants as necessary for the preparation of environmental documents. The Department may consider the opinion of the applicant regarding the qualifications of the consultant but the Department shall retain sole authority for selecting persons or firms to author, co-author, provide special services or otherwise participate in the preparation of required environmental documents.

C. Consultants or subconsultants selected by the City to prepare environmental documents for a private development proposal shall not: act as agents for the applicant in preparation or acquisition of associated underlying permits; have a financial interest in the proposal for which the environmental document is being prepared; perform any work or provide any services for the applicant in connection with or related to the proposal.

D. The Department shall establish and maintain one or more lists of qualified consultants who are eligible to receive contracts for preparation of environmental documents. Separate lists may be maintained to reflect specialized qualifications or expertise. When the Department requires consultant services to prepare environmental documents, the Department shall select a consultant from the lists and negotiate a contract for such services. The Director may waive these requirements as provided for in rules

adopted to implement this section. Subject to ISDC 20.44.145 and pursuant to ISDC 2.98, the Department shall promulgate administrative rules that establish processes to: create and maintain a qualified consultant list; select consultants from the list; remove consultants from the list; provide a method by which applicants may request a reconsideration of selected consultants based upon costs, qualifications, or timely production of the environmental document; and waive the consultant selection requirements of this chapter.

E. All costs of preparing the environment document shall be borne by the applicant. Subject to ISDC 20.44.145 and pursuant to 2.98, the Department shall promulgate administrative rules which establish a trust fund for consultant payment purposes, define consultant payment schedules, prescribe procedures for treating interest from deposited funds, and develop other procedures necessary to implement this chapter.

F. In the event an applicant decides to suspend or abandon the project, the applicant must provide formal written notice to the Department and consultant. The applicant shall continue to be responsible for all monies expended by the division or consultants to the point of receipt of notification to suspend or abandon, or other obligations or penalties under the terms of any contract let for preparation of the environmental documents.

G. The Department shall only publish an environmental impact statement (EIS) when it believes that the EIS adequately disclose: the significant direct, indirect, and cumulative adverse impacts of the proposal and its alternatives; mitigation measures proposed and committed to by the applicant, and their effectiveness in significantly mitigating impacts; mitigation measures that could be implemented or required; and unavoidable significant adverse impacts. Unless otherwise agreed to by the applicant, a final environmental impact statement shall be issued by the department within 270 days following the issuance of a DS for the proposal, except for public projects and nonproject actions, unless the department determines at the time of issuance of the DS that a longer time period will be required because of the extraordinary size of the proposal or the scope of the environmental impacts resulting therefrom; provided that the additional time shall not exceed ninety days unless agreed to by the applicant.

H. The following periods shall be excluded from the two hundred seventy day time period for issuing a final environmental impact statement:

1. Any time period during which the applicant has failed to pay required environmental review fees to the department;

2. Any period of time during which the applicant has been requested to provide additional information required for preparation of the environmental impact statement, and

3. Any period of time during which the applicant has not authorized the department to proceed with preparation of the environmental impact statement.

20.44.060 Comments and public notice. A. The procedures and standards of WAC 197-11-500 through 197-11-570 are adopted regarding public notice and comments.

B. For purposes of WAC 197-11-510, public notice shall be required as provided in ISDC Title 20. Publication of notice in a newspaper of general circulation in the area where the proposal is located also shall be required for all nonproject actions and for all other proposals that are subject to the provisions of this chapter but are not classified as land use permit decisions in ISDC Title 20.

C. The Responsible Official may require further notice if deemed necessary to provide adequate public notice of a pending action. Failure to require further or alternative notice shall not be a violation of any notice procedure.

20.44.070 Use of existing environmental documents. The procedures and standards of WAC 197-11-600 through 197-11-640 are adopted regarding use of existing environmental documents.

20.44.080 Substantive authority. A. The procedures and standards of WAC 197-11-650 through 197-11-660 regarding substantive authority and mitigation, and WAC 197-11-158, regarding reliance on existing plans, laws and regulations, are adopted.

B. For the purposes of RCW 43.21C.060 and WAC 197-11-660(a), the following policies, plans, rules and regulations, and all amendments thereto, are designated as potential bases for the exercise of the City of Sammamish's substantive authority under SEPA, subject to the provisions of RCW 43.21C.240 and subsection C of this section:

1. The policies of the State Environmental Policy Act, RCW 43.21C.020.
2. The City's Interim Comprehensive Plan, and surface water management program basin plans, as specified in ISDC chapter 20.12.
3. The Sammamish Zoning Code, as adopted in ISDC Title 21A.
4. Not Used.
5. Not Used.
6. The City's Shoreline Management Master Plan, as adopted in ISDC Title 25.
7. The King County Surface Water Runoff Policy, as adopted by reference in K.C.C. chapter 9.04,.
8. The City's Interim Street Standards, as adopted in ISDC chapter 14.42.
9. Not Used.
10. Not Used.
11. Not Used.
12. Not Used.
13. Not Used.
14. Not Used.
15. Not used.

C. Substantive SEPA authority to condition or deny new development proposals or other actions shall be used only in cases where specific adverse environmental impacts are not addressed by regulations as set forth below, or unusual circumstances exist. In cases where the City has adopted the following regulations to systematically avoid or mitigate adverse impacts [ISDC chapter 21A.12, Development Standards - Density and Dimensions, ISDC chapter 21A.14, Development Standards - Design Requirements, ISDC chapter 21A.16, Development Standards - Landscaping and Water Use, ISDC chapter 21A.18, Development Standards - Parking and Circulation, ISDC chapter 21A.20, Development Standards - Signs, , ISDC chapter 21A.24, Development Standards - Environmentally Sensitive Areas, ISDC chapter 21A.26, Development Standards - Communication Facilities, ISDC. chapter 21A.28, Development Standards - Adequacy of Public Facilities and Services], those standards and regulations will normally constitute adequate mitigation of the impacts of new development. Unusual circumstances related to a site or to a proposal, as well as environmental impacts not mitigated by the foregoing regulations, will be subject to site-specific or project-specific SEPA mitigation.

D.Not Used.

1. Not Used.
2. Not Used.

E. Any decision to approve, deny or approve with conditions pursuant to RCW 43.21C.060 shall be contained in the Responsible Official's decision document. The written decision shall contain facts and conclusions based on the proposal's specific adverse environmental impacts (or lack thereof) as identified in an environmental checklist, EIS, threshold determination, other environmental document including an executive department's staff report and recommendation to a decision maker, or findings made pursuant to a public hearing authorized or required by law or ordinance. The decision document shall state the specific plan, policy or regulation which supports the SEPA decision and, if mitigation beyond existing development regulations is required, the specific adverse environmental impacts and the reasons why additional mitigation is needed to comply with SEPA.

F. This chapter shall not be construed as a limitation on the authority of the City to approve, deny or condition a proposal for reasons based upon other statutes, ordinances or regulations.

20.44.085 SEPA/GMA Integration. The procedures and standards regarding the timing and content of environmental review specified in WAC 197-11-210 through WAC 197-11-235 are hereby adopted.

20.44.090 Ongoing actions. Unless otherwise provided herein, the provisions of WAC 197-11 shall be applicable to all elements of SEPA compliance, including the modification or supplementation of an EIS, initiated after the effective date of the Ordinance.

20.44.100 Responsibility as consulted agency. All requests from other agencies that the City of Sammamish consult on threshold investigations, the scope process, EIS's or other environmental documents shall be submitted to the d
Department. The Department shall be responsible for coordination with other affected City officials and for compiling and transmitting the City's response to such requests for consultation.

20.44.120 Appeals. A. Appeals of threshold determinations or the adequacy of a final EIS are procedural SEPA appeals that are conducted by the hearing examiner pursuant to the provisions of ISDC 20.24.080, subject to the following:

1. Only one appeal of each threshold determination shall be allowed on a proposal.
2. As provided in RCW 43.21C.075(3)(d), the decision of the Responsible Official shall be entitled to substantial weight.
3. An appeal of a DS must be filed within fourteen calendar days following issuance of the DS.
4. An appeal of a DNS for actions classified as land use permit decisions in ISDC 20.20.020 must be filed within fourteen calendar days following notice of the decision as provided in ISDC chapter 20.20.090, provided that the appeal period for a DNS for land use permit decisions shall be extended for an additional seven calendar days if WAC 197-11-340(2)(a) applies. For actions not classified as land use permit decisions in ISDC 20.20.020, no administrative appeal of a DNS is permitted.
5. Administrative appeals of the adequacy of a final EIS are permitted for actions classified as Type 2, 3 or 4 land use permit decisions in ISDC 20.20.020, except Type 1 decisions for which the Department has issued a threshold determination. Such appeals must be filed within fourteen calendar days following notice of the decision or recommendation as provided in ISDC 20.20.090.
6. The hearing examiner shall make a final decision on all procedural SEPA determinations. The hearing examiner's decision may be appealed to superior court as provided in ISDC 20.24.240B.

B. The hearing examiner's consideration of procedural SEPA appeals shall be consolidated in all cases with substantive SEPA appeals, if any, involving decisions to condition or deny an application pursuant to RCW 43.21C.060 and with the public hearing or appeal, if any, on the proposal, except for appeals of a DS.

C. Administrative appeals of decisions to condition or deny applications pursuant to RCW 43.21C.060 shall be consolidated in all cases with administrative appeals, if any, on the merits of a proposal. If proposals requiring Type 3 or 4 land use decisions are appealed to the Council as provided in ISDC 20.24.210B or D,

the recommendation or decision of the examiner to condition or deny the proposal pursuant to RCW 43.21C.060 also may be appealed to the Council, which shall make a final decision.

D. Notwithstanding the provisions of subsections A through C of this section, the Department may adopt procedures under which an administrative appeal shall not be provided if the Director finds that consideration of an appeal would be likely to cause the Department to violate a compliance, enforcement or other specific mandatory order or specific legal obligation. The Director's determination shall be included in the notice of the SEPA determination, and the Director shall provide a written summary upon which the determination is based within five days of receiving a written request. Because there would be no administrative appeal in such situations, review may be sought before a court of competent jurisdiction under RCW 43.21C.075 and applicable regulations, in connection with an appeal of the underlying governmental action. **20.44.130 Department procedural rules.** A. The Department may prepare rules and regulations pursuant to ISDC 2.98 for the implementation of SEPA WAC ch. 197-11 and this chapter.

B. The rules and regulations prepared by the Department shall not become effective until approved by Council motion.

20.44.140 Severability. Should any section, subsection, paragraph, sentence, clause or phrase of this chapter be declared unconstitutional or invalid for any reason, such decision shall not affect the validity of the remaining portion of this chapter.

20.44.145 Effective date. Not Used.

Chapter 21A.01
ZONING CODE ADOPTION

Sections:

21A.01.010 Adoption and transference.
21A.01.020 Zoning code adopted.
21A.01.025 Not Used. 21A.01.030Application of the 1993 Zoning Code.
21A.01.040 Transition to new code.
21A.01.045 Relationship to certain adopted 1994 development regulations.
21A.01.050 Not Used. 21A.01.070Area zoning conversion guidelines.
21A.01.080 Severability.
21A.01.090 Drawings.
21A.01.100 Periodic review.

21A.01.010 Adoption and transference. Pursuant to the requirement of King County Charter Section 880, there is adopted Title 21A of the "King County code" as compiled by the King County council. K.C.C. Chapter 21A.61A of the code was transferred to Title 27. K.C.C. Sections 21A.61.060, .070 were transferred to Title 20. Title 14, 16,17,19, 20, 21A, 23, 25, 27 and 27A of King County Code are hereby transferred and adopted as the Interim Sammamish Development Code (ISDC), by City of Sammamish, WA.

21A.01.020 Zoning code adopted. Under the provisions of Article XI, Section 11 of the Washington State Constitution and Article 2, Section 220.20 of the King County Charter, the zoning code attached to Ordinance 10870, which is referred to hereinafter as the 1993 Zoning Code, was adopted and declared to be the zoning code for King County until amended, repealed or superseded, subject to the provisions of ISDC 21A.01.030. This code also is hereby enacted to be consistent with and implement the comprehensive plan in accordance with RCW 36.70A. This code shall be compiled in ISDC Title 21A. (

21A.01.025 Not Used.

21A.01.030 Application of the 1993 Zoning Code. A. Except as provided in subsection C below, the 1993 Zoning Code shall apply to a specific property when, after the effective date of King County Ordinance 10870 (6/28/93), the zoning map with respect to such property is amended pursuant to:

1. an individual quasi-judicial zone reclassification;
2. countywide zoning conversion process set out in Section 5; or
3. community planning area zoning proposals accompanying plan updates or amendment studies.

B. Any reclassification requests or proposals for application of area or countywide zoning initiated after the effective date of King County Ordinance 10870 shall use the new zone classifications adopted in the 1993 Zoning Code.

21A-789

C. The provisions of ISDC Chapter 21A.24, together with the relevant provisions of Chapters 21A.06 and 21A.12, shall apply to all properties as of the effective date of King County Ordinance 11621 (1/9/94).

21A.01.040 Transition to new code. A. Complete applications for conditional use permits, planned unit developments, binding site plans, right-of-way use permits, commercial site development permits, variances, unclassified use permits, or public agency and utility exceptions which were pending at the time ISDC Title 21A took effect shall continue to be processed under those applicable zoning regulations governing review prior to implementation of ISDC Title 21A; except when a conditional use permit application has been submitted for a use that under ISDC Title 21A no longer requires a conditional use permit, that conditional use permit shall not be a requirement for the vested development proposal. Notwithstanding any contrary provisions in this title, where approved, these permits shall continue to establish allowable uses on the property until permit expiration. A variance to ISDC Title 21 standards which has been approved and has not expired shall be deemed to also vary like standards set forth in ISDC Title 21A relating to the same subject matter and development proposal. Planned unit development applications pending on October 1, 1994 shall be deemed to have vested at the time a complete application was filed. Nothing in this subsection is intended to restrict otherwise applicable vested applicant rights.

B. Except for the requirements of K.C.C. 21A.43, any lot created by subdivision or short subdivision for which a complete subdivision or short subdivision application was submitted prior to February 2, 1995, may be developed pursuant to the standards of King County Resolution 25789, as amended (former K.C.C. Title 21), including any applicable p-suffix conditions in adopted community plans and area zoning in effect on February 1, 1995 for a period of six years from the date of recording of the applicable final plat or short plat.

21A.01.045 Relationship to certain adopted 1994 development regulations. A. The King County Council makes the following findings of fact:

1. On December 19, 1994, the King County Council adopted Ordinance 11618, 11619, and 11620 amending Title 16 of the King County Code. The effective date of Ordinance 11618, 11619, and 11620 is January 9, 1995.

2. In drafting Ordinance 11618, 11619, and 11620, the references to the King County Zoning Code were amended to cite K.C.C. Title 21A, the new zoning code, and at the same time repeal references to K.C.C. Title 21, the old zoning code. This was done in anticipation that Proposed Ordinance

94-737, which adopts new zoning to implement the 1994 Comprehensive Plan and Title 21A, adopted would be on December 19, 1994 concurrent with Ordinance 11618, 11619, and 11620. Thus, K.C.C. Title 21A became effective on the same date as Ordinance 11618, 11619, and 11620.

3. However, on December 19, 1994 the King County Council deferred action on Proposed Ordinance 94-737 until January 3, 1995. On January 3, 1995 the action was again deferred to January 9, 1995. As a result of deferring action on Proposed Ordinance 94-737, K.C.C. 21A did not go into effect until some time after the effective date of Ordinance 11618, 11619, and 11620.

4. The problem created by the actions described above is that Ordinance 11618, 11619, and 11620 did go into effect with references to zoning code requirements (K.C.C. Title 21A) that was not in effect until the adoption and effective date of Proposed Ordinance 94-737. Additionally, the references to the existing zoning code (K.C.C. Title 21) are repealed in Ordinance 11618, 11619, and 11620. As a result, development applications filed between the effective date of Ordinance 11618, 11619, and 11620 and the effective date of proposed Ordinance 94-737 may vest to land use controls that did not include either existing Title 21 or the new Title 21A regulations. Such development may not provide protection for, and be harmful to, the public health, safety and welfare which Title 21 and 21A were adopted to address.

B. Ordinance 11618, 11619, and 11620 did not take effect, or if in effect shall no longer be in effect, until King County adopted zoning to implement the 1994 King county Comprehensive Plan and to convert zoning to Title 21A (Ordinance 94-737) and such zoning becomes effective. Prior to the effective date of King County Ordinance 11618, 11619, and 11620, the provisions of law in effect prior to the adoption of Ordinance 11618, 11619, and 11620 shall remain in effect until Ordinance 11618, 11619, and 11620 was in effect under the provisions of this section. C. City of Sammamish City Council anticipates incorporation as a municipal corporation organized under state law on September 1, 1999 and adopts the amended and modified sections of the King County Code Title 14, 16, 17, 19, 20, 21A, 23, 25, 27 and 27A as the Interim Sammamish Development Code (ISDC) effective upon the actual date of full incorporation, on or about September 1, 1999.

21A.01.050 Not Used.

21A.01.070 Area zoning conversion guidelines. A. The King County council directed the department to prepare proposed new zoning maps applying the 1993 King County Zoning Code and transmit within ten months of the effective date of Ordinance 10870 (6/28/93) for council review and adoption.

B. The staff at King County used the table set forth in subsection C and the guidelines of this section in preparing an ordinance or ordinances to convert each area zoning document to the 1993 Zoning Code, with modifications

appropriate to be consistent with the comprehensive plan land use map and policies, so as to implement the comprehensive plan and convert old outright and potential zone designations to new ones in a consistent manner. The provisions of this section also shall apply to conversion of the resource lands area zoning adopted pursuant to K.C.C. 20.12.390.

C. Conversion table. The following modified conversion table and criteria contained therein was used by King County in converting the zoning maps adopted pursuant to King County Resolution 25789 to the 1993 Zoning Code, and subsequently limited to those zoning classifications in place within City Of Sammamish limits in August, 1999:

RESOLUTION 25789 ZONING MAP SYMBOLS	1993 ZONING CODE MAP SYMBOLS	ADDITIONAL CRITERIA
A, A-10 A-35	A-10 A-35 or A-60	In Agricultural or Rural Areas Use zone most consistent with the comprehensive plan
GR-5, GR-2.5, G-5	UR RA	Only in designated urban areas In areas not designated urban
SR/RS15000,SR/RS 9600	R-4	Only in designated urban areas or Rural Towns
SR7200, RS7200	R-6	Only in designated urban areas or Rural Towns
SR5000, RS5000	R-8	Only in designated urban areas or Rural Towns
RMHP	R-4 through R- 18	Use zone closest to zoning on adjacent property or midrange if adjacent zones vary
RD3600, RT3600	R-12	
RM2400, RT2400	R-18	
B-N,	NB	

D. Not Used. E. Resolution of map conflicts. In cases of ambiguity or conflict between a community or comprehensive plan map designation and the zone classification applied under the old code, the department shall use the following guidelines and procedures in recommending new zones:

1. As a general rule, the outright or potential zoning designation applied shall be that which is consistent with the 1994 King County Comprehensive Plan; adopted community plans, where they do not conflict, may be used to provide additional guidance;

2. If the application of the guidelines in this subsection leads the department to propose applying an outright or potential zone classification from the 1993 Zoning Code that is not functionally equivalent to a classification from the old code as defined in the table in subsection C., the department shall notify the owner of the property proposed for reclassification no later than the council introduction date of the ordinance amending said property, and the property owner may request a change in the area zoning in a manner consistent with the procedures used for council review of a community plan and area zoning.

F. Area-wide P-suffix development conditions. The department shall review all area-wide P-suffix conditions applied through zoning adopted pursuant to King County Resolution 25789, and recommend legislation removing all such conditions which conflict with the comprehensive plan or have been replaced adequately by standards adopted in the 1993 zoning code. If P-suffix conditions implement policies in the comprehensive plan, then regulations shall be developed by the end of 1995 and the P-suffix conditions shall be removed. Any P-suffix conditions which implement policies in community plans which are not in conflict with the comprehensive plan but are not adequately addressed by this code shall be carried forward intact until they are evaluated for replacement by general code revisions in 1995.

G. Site-specific development conditions. Approval conditions for previous zone reclassifications, planned unit developments, unclassified permits, and P-suffix conditions applied to individual properties in land use actions pursuant to King County Resolution 25789, should be recommended for retention wherever they address conditions

unique to a particular property and not addressed by the standards in the Zoning Code.

H. For area zoning documents converted to the 1993 Zoning Code without amendments to their respective community plan maps and policies, only requests for zone changes which meet one of the following criteria were considered during either the King County review process:

1. as provided in subsection E;

2. when an applicant can demonstrate that the department's proposal incorrectly implements an adopted comprehensive plan map designation or policy in converting existing zoning to a new zone classification; or

3. the site is the subject of an application for a Master Planned Development or Urban Planned Development, and conversion to the 1993 Zoning Code is requested as part of such application. Rezoning of such sites during the conversion, area zoning otherwise shall be to Urban Reserve with the urban planned development overlay district as provided in Chapter 21A.38.

I. Requests which did not meet one of the criteria of subsection H were treated as quasi-judicial reclassification requests which were formally applied for according to the process provided for such requests and shall be subject to the criteria in K.C.C. 20.24.190.

J. Requests for quasi-judicial reclassification that were consistent with the conversion table illustrated in subsection C and requests for quasi-judicial reclassification to the M zone, were not subject to the criteria in K.C.C. 20.24.190.

K. Not Used.

2. Not Used. 3. Not Used. 4. Not Used.

5. Not Used.

21A.01.080 Severability. If any provision of the Interim Sammamish Development Code titles or its applications to any person or circumstance is held invalid, the remainder of the ordinance or the application of the provision to other persons or circumstances is not affected.

21A.01.090 Drawings. After Sept. 1, 1999, the city staff is hereby authorized after the date of the adoption of this ordinance to incorporate drawings as necessary for the purpose of illustrating concepts and regulatory standards contained in this title, provided that the adopted provisions of the code shall control over such drawings.

21A.01.100 Periodic review. The city staff shall submit an annual written report to the council detailing issues relating to the implementation of the Interim Sammamish Development Code and recommending amendments to address those issues.

Chapter 21A.04
ZONES, MAPS AND DESIGNATIONS

Sections:

21A.04.010 Zones and map designations established.
21A.04.020 Zone and map designation purpose.
Not Used.Not Used.Not Used.Not Used.Not Used.
21A.04.080 Urban residential zone.
21A.04.090 Neighborhood business zone.
21A.04.100 Community business zone.
Not Used.21A.04.120 Office zone.
Not Used.Not Used.
21A.04.150
21A.04.160 Map designation - Special district overlay.
Not Used.Not Used.
21A.04.190 Zoning maps and boundaries.

21A.04.010 Zones and map designations established. In order to accomplish the purposes of this title the following zoning designations and zoning map symbols are established:

ZONING DESIGNATIONS	MAP SYMBOL
Urban Residential	R (base density in dwellings per acre)
Neighborhood Business	NB
Community Business	CB
Office	O
Special District Overlay	-SO(suffix to zone's map symbol)

ZONING DESIGNATIONS	MAP SYMBOL

21A.04.020 Zone and map designation purpose. The purpose statements for each zone and map designation set forth in the following sections shall be used to guide the application of the zones and designations to all lands in City of Sammamish. The purpose statements also shall guide interpretation and application of land use regulations within the zones and designations, and any changes to the range of permitted uses within each zone through amendments to this title.

21A.04.030 Not Used.

21A.04.040 Not Used.

21A.04.050 Not Used.

21A.04.060 Not Used.

21A.04.070

Not Used.

21A.04.080 Urban residential zone. A. The purpose of the urban residential zone (R) is to implement Comprehensive Plan goals and policies for housing quality, diversity and affordability, and to efficiently use urban residential land, public services and energy. These purposes are accomplished by:

1. Providing, in the R-1 through R-8 zones, for a mix of predominantly single detached dwelling units and other development types, with a variety of densities and sizes in locations appropriate for urban densities;

2. Providing, in the R-12 through R-12 zones, for a mix of predominantly apartment and townhouse dwelling units and other development types, with a variety of densities and sizes in locations appropriate for urban densities;

3. Allowing only those accessory and complementary nonresidential uses that are compatible with urban residential communities; and

4. Establishing density designations to facilitate advanced area-wide planning for public facilities and services, and to protect environmentally sensitive sites from overdevelopment.

B. Use of this zone is appropriate in urban areasor activity centers, designated by the Comprehensive Plan or community plans as follows:

1. The R-1 zone on or adjacent to lands with area-wide environmental constraints where development is required to cluster away from sensitive areas, on lands designated urban separators or wildlife habitat network where development is required to cluster away from the axis of the corridor, or in well-established subdivisions of the same density, which are served at the time of development by public or private facilities and services adequate to support planned densities;

2. The R-4 through R-8 zones on urban lands that are predominantly environmentally unconstrained and are served at the time of development, by adequate public sewers, water supply, roads and other needed public facilities and services; and

3. The R-12 zone in urban areas, urban or community activity centersorurban neighborhood centers, that are served at the time of development by adequate public sewers, water supply, roads and other needed public facilities and services.

21A.04.090 Neighborhood business zone. A. The purpose of the neighborhood business zone (NB) is to provide convenient daily retail and personal services for a limited service area and to minimize impacts of commercial activities on nearby properties and in urban areas on properties with the land use designation of commercial outside of center, to provide for

limited residential development. These purposes are accomplished by:

1. Limiting nonresidential uses to those retail or personal services which can serve the everyday needs of a surrounding urban residential area;

2. Allowing for mixed use (housing and retail/service) developments and for townhouse developments as a sole use on properties in the urban area with the land use designation of commercial outside of center; and

B. Use of this zone is appropriate in urban neighborhood business centers, designated by the comprehensive plan, on sites which are served at the time of development by adequate public sewers when located in urban areas or adequate on-site sewage disposal, water supply, roads and other needed public facilities and services.

21A.04.100 Community business zone. A. The purpose of the community business zone (CB) is to provide convenience and comparison retail and personal services for local service areas which exceed the daily convenience needs of adjacent neighborhoods but which cannot be served conveniently by larger activity centers, and to provide retail and personal services in locations within activity centers that are not appropriate for extensive outdoor storage or auto related and industrial uses. These purposes are accomplished by:

1. Providing for limited small-scale offices as well as a wider range of the retail, professional, governmental and personal services than are found in neighborhood business areas;
2. Allowing for mixed use (housing and retail/service) developments; and
3. Excluding commercial uses with extensive outdoor storage or auto related and industrial uses.

B. Use of this zone is appropriate in urban and community centers that are designated by the adopted City of Sammamish Comprehensive Plan and community plans and that are served at the time of development by adequate public sewers, water supply, roads and other needed public facilities and services.

21A.04.110 Not Used.

21A.04.120 Office zone. A. The purpose of the office zone (O) is to provide for pedestrian and transit-oriented high-density employment uses together with limited complementary retail and urban density residential development in locations within activity centers where the full range of commercial activities is not desirable. These purposes are accomplished by:

1. Allowing for uses that will take advantage of pedestrian-oriented site and street improvement standards;
2. Providing for higher building heights and floor area ratios than those found in community centers;
3. Reducing the ratio of required parking to building floor area;
4. Allowing for on-site convenient daily retail and personal services for employees and residences; and
5. Excluding auto-oriented, outdoor or other retail sales and services which do not provide for the daily convenience needs of on-site and nearby employees or residents.

B. Use of this zone is appropriate in activity centers designated by the adopted City of Sammamish Interim Comprehensive Plan which are served at the time of

development by adequate public sewers, water supply, roads and other needed
public facilities and services.

21A.04.130 Not Used.

21A.04.140 Not Used.
21A.04.150 Not Used.
21A.04.160 Map designation - Special district overlay. The purpose of the special district overlay designation (-SO suffix to zone's map symbol is to carry out Comprehensive Plan and community, subarea or neighborhood plan policies that identify special opportunities for achieving public benefits by allowing or requiring alternative uses and development standards that differ from the general provisions of this title. Special district overlays are generally applied to a group of individual properties or entire

community, subarea or neighborhood planning areas and are designated primarily through the area zoning process. Regardless of the form in which a special district overlay is adopted, the -SO suffix shall be shown on the official zoning map maintained by the department and as a notation in the City of Sammamish file, which was updated by King County after the effective date of the adopting ordinance adopting an overlay.

21A.04.170 Not Used.

21A.04.180 Not Used.

21A.04.190 Zoning maps and boundaries. A. The location and boundaries of the zones defined by this chapter shall be shown and delineated on zoning maps adopted by ordinance.

B. Changes in the boundaries of the zones, including application or amendment of interim zoning, shall be made by ordinance adopting or amending a zoning map.

C. Zoning maps are available for public review at the City of Sammamish offices during regular business hours.

CHAPTER 21A.06 TECHNICAL TERMS AND LAND USE DEFINITIONS

SECTIONS:

21A.06.005	Scope of Chapter
21A.06.007	Abandoned vehicle
21A.06.010	Accessory living quarters
21A.06.015	Accessory use, commercial/industrial
21A.06.020	Accessory use, residential
21A.06.025	Accessory use, resource
21A.06.027	Adjustment factor
21A.06.035	Adult entertainment business
21A.06.040	Agricultural product sales
21A.06.042	Agriculture training facility
21A.06.045	Aircraft, ship and boat manufacturing
21A.06.050	Airport/heliport
21A.06.055	Alley
21A.06.057	Alternative water sources
21A.06.060	Amusement arcades
21A.06.065	Animal, small
21A.06.067	Antenna
21A.06.070	Applicant
21A.06.072	Application rate
21A.06.073	Artist studio
21A.06.075	Auction house
21A.06.080	Base flood
21A.06.085	Base flood elevation
21A.06.090	Bed and breakfast guesthouse
21A.06.095	Beehive
21A.06.097	Berm
21A.06.100	Billboard
21A.06.105	Billboard face
21A.06.110	Biologist
21A.06.115	Book, stationery, video and art supply store
21A.06.120	Broadleaf tree
21A.06.122	Buffer
21A.06.125	Building
21A.06.135	Building envelope
21A.06.140	Building facade
21A.06.145	Building, hardware and garden materials store
21A.06.150	Bulk gas storage tanks
21A.06.155	Bulk retail
21A.06.160	Campground
21A.06.165	Capacity, school
21A.06.170	Capital facilities plan, school
21A.06.172	Catastrophic collapse
21A.06.175	Cattery
21A.06.180	Cemetery, columburium or mausoleum
21A.06.182	Channel relocation and stream meander area
21A.06.185	Church, synagogue or temple
21A.06.190	Classrooms, school
21A.06.195	Clearing

21A.06.197	Coal mine by-products stockpiles
21A.06.200	Coal mine hazard areas
21A.06.205	Cogeneration
21A.06.210	Communication facility, major
21A.06.215	Communication facility, minor
21A.06.217	Community identification sign
21A.06.220	Community residential facility ("CRF")
21A.06.223	Commuter parking lot
21A.06.225	Compensatory storage
21A.06.230	Conditional use permit
21A.06.235	Conference center
21A.06.240	Confinement area
21A.06.245	Consolidation
21A.06.247	Construction and trades
21A.06.250	Construction cost per student, school
21A.06.252	Conversion factor
21A.06.255	Critical drainage area
21A.06.260	Critical facility
21A.06.262	Daily care
21A.06.265	Daycare
21A.06.270	Deciduous
21A.06.275	Density credit, transfer ("TDC")
21A.06.280	Department
21A.06.285	Department and variety store
21A.06.290	Destination resort
21A.06.295	Developer or applicant
21A.06.300	Development activity
21A.06.305	Development agreement
21A.06.310	Development proposal
21A.06.315	Development proposal site
21A.06.320	Direct traffic impact
21A.06.325	Director
21A.06.330	Dormitory
21A.06.335	Drop box facility
21A.06.340	Drug store
21A.06.345	Dwelling unit
21A.06.350	Dwelling unit, accessory
21A.06.355	Dwelling unit, apartment
21A.06.365	Dwelling unit, single detached
21A.06.370	Dwelling unit, townhouse
21A.06.375	Earth station
21A.06.380	Effective radiated power
21A.06.390	Electrical substation
21A.06.392	Emergency
21A.06.395	Energy resource recovery facility
21A.06.400	Enhancement
21A.06.405	Equipment, heavy
21A.06.410	Erosion
21A.06.415	Erosion hazard areas
21A.06.420	Evergreen
21A.06.425	Examiner
21A.06.430	Fabric shop
21A.06.435	Facilities standards

21A.06.440	Factory-built commercial building
21A.06.445	Fairground
21A.06.450	Family
21A.06.455	Federal Emergency Management Agency ("FEMA") Floodway
21A.06.460	Feed Store
21A.06.465	Fence
21A.06.467	Financial guarantee
21A.06.470	Flood fringe
21A.06.475	Flood hazard areas
21A.06.480	Flood insurance rate map
21A.06.485	Flood insurance study for King County
21A.06.490	Flood protection elevation
21A.06.495	Floodplain
21A.06.500	Floodproofing
21A.06.505	Floodway, zero-rise
21A.06.510	Florist shop
21A.06.515	Forest land
21A.06.520	Forest practice
21A.06.525	Forest product sales
21A.06.530	Forest research
21A.06.533	Fully contained community (FCC)
21A.06.535	Furniture and homefurnishings store
21A.06.540	General business service
21A.06.545	Geologist
21A.06.550	Geotechnical engineer
21A.06.555	Golf course facility
21A.06.560	Grade span
21A.06.565	Grading
21A.06.570	Grazing area
21A.06.575	Groundcover
21A.06.580	Hazardous household substance
21A.06.585	Hazardous substance
21A.06.590	Heavy equipment and truck repair
21A.06.595	Helistop
21A.06.597	Historic resource
21A.06.598	Historic resource inventory
21A.06.600	Hobby, toy, and game shop
21A.06.605	Home industry
21A.06.610	Home occupation
21A.06.615	Household pets
21A.06.620	Hydroelectric generation facility
21A.06.625	Impervious surface
21A.06.630	Improved public roadways
21A.06.635	Individual transportation and taxi
21A.06.637	Infiltration rate
21A.06.640	Interim recycling facility
21A.06.641	Interlocal agreement
21A.06.642	Irrigation efficiency
21A.06.645	Jail
21A.06.650	Jail farm
21A.06.655	Jewelry store
21A.06.658	Joint use driveway
21A.06.660	Kennel

21A.06.662	Kitchen or kitchen facility
21A.06.665	Landfill
21A.06.667	Landscape water features
21A.06.670	Landscaping
21A.06.675	Landslide
21A.06.680	Landslide hazard areas
21A.06.685	Level of service ("LOS"), traffic
21A.06.690	Light equipment
21A.06.695	Livestock
21A.06.700	Livestock, large
21A.06.705	Livestock, small
21A.06.710	Livestock sales
21A.06.715	Loading space
21A.06.720	Log storage
21A.06.725	Lot
21A.06.730	Lot line, interior
21A.06.735	Marina
21A.06.740	Material error
21A.06.745	Microwave
21A.06.750	Mitigation
21A.06.751	Mitigation bank
21A.06.752	Mitigation banking
21A.06.755	Mobile home
21A.06.760	Mobile home park
21A.06.765	Monitoring
21A.06.770	Monuments, tombstones, and gravestones sales
21A.06.775	Motor vehicle, boat and mobile home dealer
21A.06.780	Motor vehicle and bicycle manufacturing
21A.06.782	Mulch
21A.06.785	Municipal water production
21A.06.790	Native vegetation
21A.06.795	Naturalized species
21A.06.797	Net buildable area
21A.06.800	Nonconformance
21A.06.805	Nonhydro-electric generation facility
21A.06.810	Non-ionizing electromagnetic radiation ("NIER")
21A.06.815	Noxious weed
21A.06.817	Off-street required parking lot
21A.06.820	Open-work fence
21A.06.825	Ordinary high water mark
21A.06.830	Outdoor performance center
21A.06.831	Overburden-cover-to-seam-thickness ratio
21A.06.832	Overspray
21A.06.835	Park
21A.06.840	Park service area
21A.06.845	Parking lot aisle
21A.06.850	Parking lot unit depth
21A.06.855	Parking space
21A.06.860	Parking space angle
21A.06.865	Party of record
21A.06.870	Peak hour
21A.06.875	Permanent school facilities
21A.06.880	Personal medical supply store

21A.06.885	Pet shop
21A.06.890	Photographic and electronic shop
21A.06.895	Plant associations of infrequent occurrence
21A.06.897	Plant factor
21A.06.899	Potable water
21A.06.900	Private
21A.06.905	Private stormwater management facility
21A.06.910	Professional office
21A.06.915	Public agency
21A.06.920	Public agency animal control facility
21A.06.925	Public agency archive
21A.06.930	Public agency or utility office
21A.06.935	Public agency or utility yard
21A.06.940	Public agency training facility
21A.06.945	Radio frequency
21A.06.950	Reasonable use
21A.06.955	Receiving site
21A.06.960	Recreational vehicle ("RV")
21A.06.965	Recreational vehicle parks
21A.06.970	Recyclable material
21A.06.972	Reference evapotranspiration (Eto)
21A.06.975	Regional stormwater management facility
21A.06.980	Regional utility corridor
21A.06.985	Relocatable facilities cost per student
21A.06.990	Relocatable facility
21A.06.995	Relocation facilities
21A.06.1000	Restoration
21A.06.1005	Retail comparison
21A.06.1010	Retail convenience
21A.06.1011	Retaining wall
21A.06.1012	Runoff
21A.06.1015	Salmonid
21A.06.1020	School bus base
21A.06.1025	School district
21A.06.1030	School district support facility
21A.06.1035	Schools, elementary, and middle/junior high
21A.06.1040	Schools, secondary or high school
21A.06.1045	Seismic hazard areas
21A.06.1050	Self-service storage facility
21A.06.1055	Sending site
21A.06.1060	Senior citizen
21A.06.1062	Senior citizen assisted housing
21A.06.1065	Sensitive areas
21A.06.1070	Setback
21A.06.1075	Shelters for temporary placement
21A.06.1080	Shooting range
21A.06.1085	Sign
21A.06.1090	Sign, awning
21A.06.1095	Sign, changing message center
21A.06.1100	Sign, community bulletin board
21A.06.1105	Sign, directional
21A.06.1110	Sign, freestanding
21A.06.1115	Sign, fuel price

21A.06.1120 Sign, incidental
21A.06.1125 Sign, indirectly illuminated
21A.06.1130 Sign, monument
21A.06.1135 Sign, off-premise directional
21A.06.1140 Sign, on-premise
21A.06.1145 Sign, permanent residential development identification
21A.06.1150 Sign, portable
21A.06.1155 Sign, projecting
21A.06.1160 Sign, time and temperature
21A.06.1165 Sign, wall
21A.06.1170 Site
21A.06.1172 Site area
21A.06.1175 Site cost per student
21A.06.1177 SITUS file
21A.06.1180 Ski area
21A.06.1185 Soil recycling facility
21A.06.1190 Source-separated organic material
21A.06.1195 Special use permit
21A.06.1200 Specialized instruction school
21A.06.1205 Specified sexual activities
21A.06.1210 Sporting goods store
21A.06.1215 Sports club
21A.06.1220 Stable
21A.06.1225 Standard of service, school districts
21A.06.1230 Steep slope hazard areas
21A.06.1235 Stream functions
21A.06.1240 Streams
21A.06.1245 Street
21A.06.1250 Street frontage
21A.06.1255 Structure
21A.06.1260 Student factor
21A.06.1265 Submerged land
21A.06.1270 Substantial improvement
21A.06.1275 Temporary use permit
21A.06.1277 Theater
21A.06.1278 Theatrical production services
21A.06.1280 Tightline sewer
21A.06.1285 Trails
21A.06.1290 Transfer station
21A.06.1294 Transit base
21A.06.1305 Transitional housing facilities
21A.06.1310 Transmission equipment
21A.06.1315 Transmission line booster station
21A.06.1320 Transmission support structure
21A.06.1325 Transmitter building
21A.06.1330 Transportation system management ("TSM")
21A.06.1332 Trough subsidence
21A.06.1335 Ultimate roadway section
21A.06.1340 Urban Plan Development (UPD)
21A.06.1345 Use
21A.06.1350 Utility facility
21A.06.1352 Vactor waste
21A.06.1353 Vactor waste receiving facility

21A.06.1355 Variance
21A.06.1360 Vegetation
21A.06.1365 Vocational school
21A.06.1370 Volcanic hazard areas
21A.06.1375 Warehousing and wholesale trade
21A.06.1380 Wastewater treatment facility
21A.06.1382 Water budget
21A.06.1385 Water dependent use
21A.06.1390 Wet meadows, grazed
21A.06.1395 Wetland edge
21A.06.1400 Wetland, forested
21A.06.1405 Wetland functions
21A.06.1410 Wetland, isolated
21A.06.1415 Wetlands
21A.06.1420 Wetpond
21A.06.1425 Wildlife shelter
21A.06.1430 Work release facility
21A.06.1432 Wrecked, dismantled or inoperative vehicle
21A.06.1435 Yard waste processing facility
21A.06.1440 Zoo animal breeding facility

21A.06.005 Scope of chapter. This chapter contains definitions of technical and procedural terms used throughout the code and definitions of land uses listed in tables in K.C.C. 21A.08. The definitions in this chapter supplement the standard Industrial Classification Manual (SIC). See K.C.C. 21A.02 for rules on interpretation of the code, including use of these definitions. Development standards are found in K.C.C. 21A.12 through K.C.C. 21A.38. (Ord. 10870 § 41, 1993).

21A.06.007 Abandoned vehicle. An "abandoned vehicle" means any vehicle left upon the property of another without the consent of the owner of such property for a period of twenty-four hours or longer, except that a vehicle shall not be considered abandoned if its owner or operator is unable to remove it from the place where it is located and so notifies law enforcement officials and requests assistance. (Ord. 12024 § 10, 1995).

21A.06.010 Accessory living quarters. Accessory living quarters: living quarters in an accessory building for the use of the occupant or persons employed on the premises, or for temporary use of guests of the occupant. Such quarters have no kitchen and are not otherwise used as a separate dwelling unit. (Ord. 10870 § 42, 1993).

21A.06.015 Accessory use, commercial/industrial. Accessory use, commercial/industrial:

A. A use that is subordinate and incidental to a commercial or industrial use; including, but not limited to the following uses:

1. Administrative offices;
2. Employee exercise facilities;
3. Employee food service facilities;
4. Incidental storage of raw materials and finished products sold or manufactured on-site;
5. Business owner or caretaker residence;
6. Cogeneration facilities; and
7. Ground maintenance facilities

B. Some accessory uses within the scope of this section may be defined separately to enable the code to apply different conditions of approval. (Ord. 10870 § 43, 1993).

21A.06.020 Accessory use, residential. Accessory use, residential: A. A use, structure, or activity which is subordinate and incidental to a residence including, but not limited to the following uses:

1. Accessory living quarters and dwellings;
2. Fallout/bomb shelters;
3. Keeping household pets;
4. On-site rental office;
5. Pools, private docks, piers;
6. Antennae for private telecommunication services;
7. Storage of yard maintenance equipment;
8. Storage of private vehicles, e.g. motor vehicles, boats, trailers or planes; or
9. Greenhouses.

B. Some accessory uses within the scope of this section may be defined separately to enable the code to apply different conditions of approval. (Ord. 11621 § 29, 1994: Ord. 10870 § 44, 1993).

21A.06.025 Accessory use, resource. Accessory use, resource: A. A use, structure, or part of a structure, which is customarily subordinate and incidental to a resource use including, but not limited to the following uses:

1. Housing of agricultural workers; or
2. Storage of agricultural products or equipment used on site.

B. Some accessory uses within the scope of this section may be defined separately to enable the code to apply different conditions of approval. (Ord. 10870 § 45, 1993).

21A.06.027 Adjustment factor. Adjustment factor: a factor that when applied to the reference evapotranspiration, adjusts for plant factors and irrigation efficiency. (Ord. 11210 § 22, 1994).

21A.06.035 Adult entertainment business. Adult entertainment business: An adult club, adult arcade or adult theatre as those terms are defined in the adult entertainment licensing provisions in K.C.C. Title 6. (Ord. 13546 § 2, 1999; 10870 § 47, 1993).

21A.06.040 Agricultural product sales. Agricultural product sales: the retail sale of items resulting from the practice of agriculture, including crops such as fruits, vegetables, grains, seed, feed, and plants, or animal products such as eggs, milk, and meat. (Ord. 10870 § 48, 1993).

21A.06.042 Agriculture training facility. An establishment developed for use by the property owner, its employees, and/or agricultural trainees for training activities which are related to or supportive of the agricultural use of the property and surrounding agricultural activities. Agriculture training facilities may include overnight lodging, meeting rooms, and educational activities. (Ord. 12691 § 2, 1997).

21A.06.045 Aircraft, ship and boat manufacturing. Aircraft, ship and boat manufacturing: the fabrication and/or assembling of aircraft, ships or boats, including only uses located in SIC Industry Group Nos.:

A. 372-Aircraft and Parts; and
B. 373-Ship and Boat Building and Repairing. (Ord. 10870 § 49, 1993).

21A.06.050 Airport/heliport. Airport/heliport: any runway, landing area or other facility, excluding facilities for the primary use of the individual property owner which are classified as helistops, designed or used by public carriers or private aircraft for the landing and taking off of aircraft, including the following associated facilities:

A. Taxiways;
B. Aircraft storage and tie-down areas;
C. Hangars;
D. Servicing; and
E. Passenger and air freight terminals. (Ord. 10870 § 50, 1993).

21A.06.055 Alley. Alley: an improved thoroughfare or right-of-way, whether public or private, usually narrower than a street, that provides vehicular access to an interior boundary of one or more lots, and is not designed for general traffic circulation. (Ord. 10870 § 51, 1993).

21A.06.057 Alternative water sources. Alternative water sources: stored rainwater, or treated or recycled waste water of a quality suitable for uses such as landscape irrigation. Such water is not considered potable. (Ord. 11210 § 23, 1994).

21A.06.060 Amusement arcades. Amusement arcades: a building or part of a building in which five or more pinball machines, video games, or other such player-operator amusement devices (excluding juke boxes or gambling-related machines) are operated. (Ord. 10870 § 52, 1993).

21A.06.065 Animal, small. Animal, small: any animal other than livestock or animals considered to be predatory or wild which are kept outside a dwelling unit all or part of the time. Animals considered predatory or wild, excluding those in zoo animal breeding facilities, shall be considered small animals when they are taken into captivity for the purposes of breeding, domestication, training, hunting or exhibition. (Ord. 12709 § 1, 1997: Ord. 10870 § 53, 1993).

21A.06.067 Antenna. Antenna: any system of poles, panels, rods, reflecting discs or similar devices used for the transmission or reception of radio frequency signals. (Ord. 13129 § 20, 1998).

21A.06.070 Applicant. Applicant: a property owner, or a public agency or public or private utility which owns a right-of-way or other easement or has been adjudicated the right to such an easement pursuant to RCW 8.12.090, or any person or entity designated or named in writing by the property or easement owner to be the applicant, in an application for a development proposal, permit or approval. (Ord. 12196 § 53, 1996: Ord. 11700 § 42, 1995: Ord. 10870 § 54, 1993).

21A.06.072 Application rate. Application rate: the depth of water applied to an area expressed in inches per hour. (Ord. 11210 § 24, 1994).

21A.06.073 Artist studio. Artist studio: an establishment providing a place solely for the practice or rehearsal of various performing or creative arts; including, but not limited to, acting, dancing, singing, drawing, painting and sculpting. (Ord. 13022 § 1, 1998).

21A.06.075 Auction house. Auction house: An establishment where the property of others is sold by a broker or auctioneer to persons who attend scheduled sales periods or events. (Ord. 10870 § 55, 1993).

21A.06.080 Base flood. Base flood: a flood having a one percent chance of being equaled or exceeded in any given year, often referred to as the "100-year flood." (Ord. 10870 § 56, 1993).

21A.06.085 Base flood elevation. Base flood elevation: the water surface elevation of the base flood in relation to the National Geodetic Vertical Datum of 1929. (Ord. 10870 § 57, 1993).

21A.06.090 Bed and breakfast guesthouse. Bed and breakfast guesthouse: a dwelling unit or accessory building within which bedrooms are available for paying guests. (Ord. 10870 § 58, 1993).

21A.06.095 Beehive. Beehive: a structure designed to contain one colony of honey bees (apis mellifera). (Ord. 10870 § 59, 1993).

21A.06.097 Berm. Berm: a constructed area of compacted earth. (Ord. 12987 § 1, 1998).

21A.06.100 Billboard. Billboard: a sign, including both the supporting structural framework and attached billboard faces, used principally for advertising a business activity, use, product, or service unrelated to the primary use or activity of the property on which the billboard is located; excluding off-premise directional, or temporary real estate signs. (Ord. 10870 § 60, 1993).

21A.06.105 Billboard face. Billboard face: that portion of a billboard, exclusive of its structural support, on which changeable advertising copy is displayed, either by affixing preprinted poster panels or by painting copy on location; subclassified as follows:

A. Billboard face I -- a billboard face not exceeding a height of 14 feet or a width of 48 feet, and may also include temporary and irregularly shaped extensions subject to the area and duration limitations in K.C.C. 21A.20; and

B. Billboard face II -- a billboard face not exceeding a height of 12 feet or a width of 24 feet. (Ord. 10870 § 61, 1993).

21A.06.110 Biologist. Biologist: a person who has earned at least a Bachelor of Science degree in the biological sciences from an accredited college or university or who has equivalent educational training and experience. (Ord. 10870 § 62, 1993).

21A.06.115 Book, stationery, video and art supply store. Book, stationery, video and art supply store: An establishment engaged in the retail sale of books and magazines, stationery, records and tapes, video and art supplies, including only uses located in SIC Industry Nos.:

A. 5942-Book Stores;
B. 5943-Stationery Stores;
C. 5999-Architectural Supplies and Artists' Supply and Materials Stores;
D. 7841-Video tape rental;
E. 5735 - Record, compact disc and prerecorded tape stores; and
F. 5736 - Musical Instrument stores. (Ord. 10870 § 63, 1993).

21A.06.120 Broadleaf tree. Broadleaf tree: a tree characterized by leaves that are broad in width and may include both deciduous and evergreen species. (Ord. 10870 § 64, 1993).

21A.06.122 Buffer. Buffer: a designated area contiguous to a steep slope or landslide hazard area intended to protect slope stability, attenuation of surface water flows and landslide hazards or a designated area contiguous to a stream or wetland intended to protect the stream or wetland and be an integral part of the stream or wetland ecosystem. (Ord. 10870 § 70, 1993).

21A.06.125 Building. Building: any structure having a roof. (Ord. 10870 § 65, 1993).

21A.06.135 Building envelope. Building envelope: area of a lot that delineates the limits of where a building may be placed on the lot. (Ord. 10870 § 67, 1993).

21A.06.140 Building facade. Building facade: that portion of any exterior elevation of a building extending from the grade of the building to the top of the parapet wall or eaves, for the entire width of the building elevation. (Ord. 10870 § 68, 1993).

21A.06.145 Building, hardware and garden materials store. Building, hardware and garden materials store: An establishment engaged in selling lumber and other building materials, feed, or lawn and garden supplies; including, but not limited to uses located in SIC Major Group No. 52-Building Materials, Hardware, Garden Supply, excluding Mobile Home Dealers. (Ord. 10870 § 69, 1993).

21A.06.150 Bulk gas storage tanks. Bulk gas storage tanks: A tank from which illuminating, heating, or liquified gas is distributed by piping directly to individual users. (Ord. 11157 § 29, 1993).

21A.06.155 Bulk retail. Bulk retail: An establishment offering the sale of bulk goods to the general public, including limited sales to wholesale customers. These establishments offer a variety of lines of merchandise including but not limited to: food, building, hardware and garden materials, dry goods, apparel and accessories, home furnishings, housewares, drugs, auto supplies, hobby, toys, games, photographic, and electronics. (Ord. 10870 § 71, 1993).

21A.06.160 Campground. Campground: an area of land developed for recreational use in temporary occupancy, such as: tents or recreational vehicles without hook-up facilities. (Ord. 10870 § 72, 1993).

21A.06.165 Capacity, school. Capacity, school: the number of students a school district's facilities can accommodate district-wide, based on the district's standard of service, as determined by the school district. (Ord. 10870 § 73, 1993).

21A.06.170 Capital facilities plan, school. Capital facilities plan, school: a district's facilities plan adopted by the school board consisting of:

A. A forecast of future needs for school facilities based on the district's enrollment projections;

B. The long-range construction and capital improvements projects of the district;

C. The schools under construction or expansion;

D. The proposed locations and capacities of expanded or new school facilities;

E. At least a six-year financing plan component, updated as necessary to maintain at least a six-year forecast period, for financing needed school facilities within projected funding levels, and identifying sources of financing for such purposes, including bond issues authorized by the voters and projected bond issues not yet authorized by the voters;

F. Any other long-range projects planned by the district.

G. The current capacity of the district's school facilities based on the districts adopted standard of service, and a plan to eliminate existing deficiencies, if any, without the use of impact fees; and

H. An inventory showing the location and capacity of existing school facilities. (Ord. 10870 § 74, 1993).

21A.06.172 Catastrophic collapse. Catastrophic collapse: the collapse of the ground surface by overburden caving into underground voids created by mining. Catastrophic collapse does not include the effects from trough subsidence. (Ord. 13319 § 2, 1998).

21A.06.175 Cattery. Cattery: a place where adult cats are temporarily boarded for compensation, whether or not for training. An adult cat is of either sex, altered or unaltered, that has reached the age of six months. (Ord. 10870 § 75, 1993).

21A.06.180 Cemetery, columbarium or mausoleum. Cemetery, columbarium or mausoleum: land or structures used for interment of the dead or their remains. For purposes of the code, pet cemeteries are considered a subclassification of this use. (Ord. 10870 § 76, 1993).

21A.06.182 Channel Relocation and stream meander areas. Channel relocation and stream meander area: those areas subject to risk due to stream bank destabilization, rapid stream incision, stream bank erosion, and shifts in the location of stream channels. (Ord. 11621 § 20, 1994).

21A.06.185 Church, synagogue or temple. Church, synagogue or temple: A place where religious services are conducted, including those uses located in SIC Industry No. 866 and including accessory uses in the primary or accessory buildings such as religious education, reading rooms, assembly rooms, and residences for nuns and clergy. This definition does not include facilities for training of religious orders. (Ord. 10870 § 77, 1993).

21A.06.190 Classrooms, school. Classrooms, school: educational facilities of the district required to house students for its basic educational program. The classrooms are those facilities the district determines are necessary to best serve its student population. Specialized facilities as identified by the district, including but not limited to gymnasiums, cafeterias, libraries, administrative offices, and child care centers, shall not be counted as classrooms. (Ord. 10870 § 78, 1993).

21A.06.195 Clearing. Clearing: the limbing, pruning, trimming, topping, cutting or removal of vegetation or other organic plant matter by physical, mechanical, chemical or other means. (Ord. 10870 § 79, 1993).

21A.06.197 Coal mine by-products stockpiles. Coal mine by-products stockpiles: an accumulation, greater than five hundred cubic yards and five feet of vertical depth, of undisturbed waste and/or by-product materials having greater than fifty percent, as measured by weight, of mineral coal or coal shale as a component and which resulted from historic coal mining. (Ord. 13319 § 3, 1998).

21A.06.200 Coal mine hazard areas. Coal mine hazard areas: those areas in King County underlain directly or affected by operative or abandoned subsurface coal mine workings. Based upon a coal mine hazard assessment report prepared pursuant to K.C.C. 21A.24.210, coal mine hazard areas are to be categorized as declassified, moderate, or severe:

A. "Declassified" coal mine areas are those for which a risk of catastrophic collapse is not significant and which the hazard assessment report has determined require no special engineering or architectural recommendations to prevent significant risks of property damage. Declassified coal mine areas may typically include, but are not limited to, areas underlain or directly affected by coal mines at depths greater than three hundred feet as measured from the surface but may often include areas underlain or directly affected by coal mines at depths less than three hundred feet.

B. "Moderate" coal mine hazard areas are those areas that pose significant risks of property damage which can be mitigated by special engineering or architectural recommendations.

Moderate coal mine hazard areas may typically include, but are not limited to, areas underlain or directly affected by abandoned coal mine workings from a depth of zero (i.e. the surface of the land) to three hundred feet or with overburden-cover-to-seam thickness ratios of less than ten to one dependent on the inclination of the seam.

C. "Severe" coal mine hazard areas are those areas that pose a significant risk of catastrophic ground surface collapse. Severe coal mine hazard areas may typically include, but are not limited to, areas characterized by unmitigated openings such as entries, portals, adits, mine shafts, air shafts, timber shafts, sinkholes, improperly filled sink holes, and other areas of past or significant probability for catastrophic ground surface collapse. Severe coal mine hazard areas typically include, but are not limited to, over land surfaces underlain or directly affected by abandoned coal mine workings from a depth of zero (i.e. surface of the land) to one hundred fifty feet. (Ord. 13319 § 1, 1998: Ord. 10870 § 80, 1993).

21A.06.205 Cogeneration. Cogeneration: the sequential generation of energy and useful heat from the same primary source or fuel for industrial, commercial, or residential heating or cooling purposes. (Ord. 10870 § 81, 1993).

21A.06.210 Communication facility, major. Major communication facility: a communication facility for transmission and reception of:

A. UHF and VHF television signals; or

B. FM or AM radio signals. (Ord. 10870 § 82, 1993).

21A.06.215 Communication facility, minor. Minor communication facility: a communication facility for transmission and reception of:

A. Two-way and/or citizen band ("CB") radio signals;

B. Point-to-point microwave signals;

C. Cellular radio signals;

D. Signals through FM radio translators; or

E. Signals through FM radio boosters under ten watts effective radiated power ("ERP"). (Ord. 10870 § 83, 1993).

21A.06.217 Community identification sign. Community identification sign: a sign identifying the location of a community or geographic area such as unincorporated activity centers or rural towns designated by the comprehensive plan or communities recognized and delineated by a recognized unincorporated area council. (Ord. 13022 § 2, 1998).

21A.06.220 Community residential facility ("CRF"). Community residential facility ("CRF"): living quarters meeting applicable federal and state standards that function as a single housekeeping unit and provide supportive services, including but not limited to counseling, rehabilitation and medical supervision, excluding drug and alcohol detoxification which is classified in Section 21A.08.050 as health services. CRF's are further classified as follows:

A. CRF-I -- Nine to ten residents and staff;

B. CRF-II -- Eleven or more residents and staff.

If staffed by nonresident staff, each 24 staff hours per day equals one full-time residing staff member for purposes of subclassifying CRF's. (Ord. 10870 § 84, 1993).

21A.06.223 Commuter parking lot. Commuter parking lot: vehicle parking specifically for the purpose of access to a public transit system or for users of carpools or vanpools. (Ord. 13022 § 3, 1998).

21A.06.225 Compensatory storage. Compensatory storage: new, excavated storage volume equivalent to any flood storage which is eliminated by building filling or grading within the flood plain. For the purpose of this definition, equivalent flood storage capacity is that which is

replaced by equal volume between corresponding one-foot contour intervals which are hydraulically connected to the floodway through their entire depth. (Ord. 10870 § 85, 1993).

21A.06.230 Conditional use permit. Conditional use permit: permit granted by the county to locate a permitted use on a particular property subject to conditions placed on the permitted use to ensure compatibility with nearby land uses. (Ord. 10870 § 86, 1993).

21A.06.235 Conference center. Conference center: An establishment developed primarily as a meeting facility, including only facilities for recreation, overnight lodging, and related activities provided for conference participants. (Ord. 10870 § 87, 1993).

21A.06.240 Confinement area. A confinement area is any open land area in which livestock are kept where the forage does not meet the definition of a grazing area. (Ord. 11157 § 2, 1993: Ord. 10870 § 88, 1993).

21A.06.245 Consolidation. Consolidation: the relocation to a consolidated transmission structure of the main transmit antennae of two or more FCC broadcast licensees which prior to such relocation utilized transmission structures located within a 1500 foot radius of the center of the consolidated transmission structure to support their main transmit antennae. (Ord. 10870 § 89, 1993).

21A.06.247 Construction and trades. Construction and trades: establishments that provide services related to construction of buildings and infrastructure, and other improvements to property. Such establishments include, SIC Major group no.'s 15-17, and SIC Industry group no. 078 (landscape and horticultural services). (Ord. 12243 § 4, 1996).

21A.06.250 Construction cost per student, school. Construction cost per student, school: the estimated cost of construction of a permanent school facility in the district for the grade span of school to be provided, as a function of the district's facilities standard per grade span and taking into account the requirements of students with special needs. (Ord. 10870 § 90, 1993).

21A.06.252 Conversion factor. Conversion factor: a number that converts the water budget allowance from acre-inches per acre per year to gallons per square foot per year or cubic feet per year. (Ord. 11210 § 25, 1994).

21A.06.255 Critical drainage area. Critical drainage area: an area which has been formally determined by the King County surface water management department to require more restrictive regulation than county-wide standards afford in order to mitigate severe flooding, drainage, erosion or sedimentation problems which result from the cumulative impacts of development and urbanization. (Ord. 10870 § 91, 1993).

21A.06.260 Critical facility. Critical facility: a facility necessary to protect the public health, safety and welfare and which is defined under the occupancy categories of "essential facilities", "hazardous facilities" and "special occupancy structures" in the Uniform Building Code. Critical facilities also include nursing homes, public roadway bridges, and sites for hazardous substance storage or production, not including the temporary storage of consumer products containing hazardous substances intended for household use or for retail sale on the site. (Ord. 10870 § 92, 1993).

21A.06.262 Daily care. Daily care: medical procedures, monitoring and attention that are necessarily provided at the residence of the patient by the primary provider of daily care on a 24-hour basis. (Ord. 12523 § 2, 1996).

21A.06.265 Daycare. Daycare: An establishment for group care of non-resident adults or children.

A. Daycare shall include only, SIC Industry No. 835, Child Day Care Services, SIC Industry No. 8322, Adult Daycare Centers and the following:

1. Adult Daycare, such as adult day health centers or social day care as defined by the Washington State Department of Social and Health Services;
2. Nursery schools for children under minimum age for education in public schools;
3. Privately conducted kindergartens or prekindergartens when not a part of a public or parochial school; and
4. Programs covering after-school care for school children.

B. Daycare establishments are subclassified as follows:

1. Daycare I -- a maximum of 12 adults or children in any 24 hour period; and
2. Daycare II -- over 12 adults or children in any 24 hour period. (Ord. 10870 § 93, 1993).

21A.06.270 Deciduous: Deciduous: a plant species with foliage that is shed annually. (Ord. 10870 § 94, 1993).

21A.06.275 Density credit, transfer ("TDC"). Density credit, transfer ("TDC"): the ability to transfer potentially buildable dwelling units from an eligible sending site to an eligible receiving site as provided in this code. (Ord. 10870 § 95, 1993).

21A.06.280 Department. Department: the King County department of development and environmental services. (Ord. 10870 § 96, 1993).

21A.06.285 Department and variety store. Department and variety store: An establishment engaged in the retail sale of a variety of lines of merchandise, such as; dry goods, apparel and accessories, home furnishings, housewares, including only uses located in SIC Major Group and Industry Nos.:

A. 53-General Merchandise;
B. 5947-Gift, Novelty, and Souvenir Shops; and
C. 5948-Luggage and Leather Goods Stores. (Ord. 10870 § 97, 1993).

21A.06.290 Destination resort. Destination resort: an establishment for resource-based recreation and intended to utilize outdoor recreational opportunities, including related services, such as food, overnight lodging, equipment rentals, entertainment and other conveniences for guests of the resort. (Ord. 10870 § 98, 1993).

21A.06.295 Developer or applicant. Developer or applicant: the person or entity who owns or holds purchase options or other development control over property for which development activity is proposed. See Applicant 21A.06.070. (Ord. 11978 § 2, 1995: Ord. 10870 § 99, 1993).

21A.06.300 Development activity. Development activity: any residential construction or expansion of a building, structure or use, any change in use of a building or structure, or any change in the use of land that creates additional demand for school facilities. (Ord. 10870 § 100, 1993).

21A.06.305 Development agreement. Development agreement: a recorded agreement between a UPD applicant and King County which incorporates the site plans, development standards, and other features of an Urban Plan Development as described in K.C.C. 21A.39. (Ord. 10870 § 101, 1993).

21A.06.310 Development proposal. Development proposal: any activities requiring a permit or other approval from King County relative to the use or development of land. (Ord. 10870 § 102, 1993).

21A.06.315 Development proposal site. Development proposal site: the legal boundaries of the parcel or parcels of land for which an applicant has or should have applied for authority from King County to carry out a development proposal. (Ord. 10870 § 103, 1993).

21A.06.320 Direct traffic impact. Direct traffic impact: any increase in vehicle traffic generated by a proposed development which equals or exceeds ten (10) peak hour, peak direction vehicle trips on any roadway or intersection. (Ord. 10870 § 104, 1993).

21A.06.325 Director. Director: the director of King County department of development and environmental services, or his or her designee. (Ord. 10870 § 105, 1993).

21A.06.330 Dormitory. Dormitory: A residential building that provides sleeping quarters, but not separate dwelling units, and may include common dining, cooking and recreation or bathing facilities. (Ord. 10870 § 106, 1993).

21A.06.335 Drop box facility. Drop box facility: a facility used for receiving solid waste and recyclable from off-site sources into detachable solid waste containers, including the adjacent areas necessary for entrance and exit roads, unloading and vehicle turnaround areas. Drop box facilities normally service the general public with loose loads and may also include containers for separated recyclable. (Ord. 10870 § 107, 1993).

21A.06.340 Drug store. Drug store: An establishment engaged in the retail sale of prescription drugs, nonprescription medicines, cosmetics and related supplies, including only uses located in SIC Industry Group and Industry Nos.:

A. 591-Drug Stores and Proprietary Stores;
B. 5993-Tobacco Stores and Stands; and
C. 5999-Cosmetics Stores. (Ord. 10870 § 108, 1993).

21A.06.345 Dwelling unit. Dwelling unit: one or more rooms designed for occupancy by a person or family for living and sleeping purposes, containing kitchen facilities and rooms with internal accessibility, for use solely by the dwelling's occupants; dwelling units include but are not limited to bachelor, efficiency and studio apartments, factory-built housing and mobile homes. (Ord. 10870 § 109, 1993).

21A.06.350 Dwelling unit, accessory. Dwelling unit, accessory: a separate, complete dwelling unit attached to or contained within the structure of the primary dwelling; or contained within a separate structure that is accessory to the primary dwelling unit on the premises. (Ord. 10870 § 110, 1993).

21A.06.355 Dwelling unit, apartment. Dwelling unit, apartment: a dwelling unit contained in a building consisting of two or more dwelling units which may be stacked, or one or more dwellings with nonresidential uses. (Ord. 10870 § 111, 1993).

21A.06.365 Dwelling unit, single detached. Dwelling unit, single detached: a detached building containing one dwelling unit. (Ord. 10870 § 113, 1993).

21A.06.370 Dwelling unit, townhouse. Dwelling unit, townhouse: a building containing one dwelling unit that occupies space from the ground to the roof, and is attached to one or more other townhouse dwellings by common walls. (Ord. 10870 § 114, 1993).

21A.06.375 Earth station. Earth station: a communication facility which transmits and/or receives signals to and from an orbiting satellite using satellite dish antennas. (Ord. 10870 § 115, 1993).

21A.06.380 Effective radiated power. Effective radiated power: the product of the antenna power input and the numerical antenna power gain. (Ord. 10870 § 116, 1993).

21A.06.390 Electrical substation. Electrical substation: a site containing equipment for the conversion of high voltage electrical power transported through transmission lines into lower voltages transported through distribution lines and suitable for individual users. (Ord. 10870 § 118, 1993).

21A.06.392 Emergency. Emergency: an occurrence during which there is imminent danger to the public health, safety and welfare, or which poses an imminent risk to property, as a result of a natural or man-made catastrophe as so declared by the director of DDES. (Ord. 11621 § 21, 1994).

21A.06.395 Energy resource recovery facility. Energy resource recovery facility: an establishment for recovery of energy in a usable form from mass burning or refuse-derived fuel incineration, pyrolysis or any other means of using the heat of combustion of solid waste. (Ord. 10870 § 119, 1993).

21A.06.400 Enhancement. Enhancement: an action which increases the functions and values of a stream, wetland or other sensitive area or buffer. (Ord. 10870 § 120, 1993).

21A.06.405 Equipment, heavy. Equipment, heavy: high-capacity mechanical devices for moving earth or other materials, and mobile power units including, but not limited to:

A. Carryalls;
B. Graders;
C. Loading and unloading devices;
D. Cranes;
E. Drag lines;
F. Trench diggers;
G. Tractors;
H. Augers;
I. Bulldozers;
J. Concrete mixers and conveyers;
K. Harvesters;
L. Combines; or
M. Other major agricultural equipment and similar devices operated by mechanical power as distinguished from manpower. (Ord. 10870 § 121, 1993).

21A.06.410 Erosion. Erosion: the process by which soil particles are mobilized and transported by natural agents such as wind, rainsplash, frost action or surface water flow. (Ord. 10870 § 122, 1993).

21A.06.415 Erosion hazard areas. Erosion hazard areas: those areas in King County underlain by soils which are subject to severe erosion when disturbed. Such soils include, but are not limited to, those classified as having a severe to very severe erosion hazard according to the USDA Soil Conservation Service, the 1990 Snoqualmie Pass Area Soil Survey, the 1973 King County Soils Survey or any subsequent revisions or addition by or to these sources. These soils include, but are not limited to, any occurrence of River Wash ("Rh") or Coastal Beaches ("Cb") and the following when they occur on slopes 15% or steeper:

A. the Alderwood gravely sandy loam ("AgD");
B. the Alderwood and Kitsap soils ("AkF");
C. the Beausite gravely sandy loam ("BeD" and "BeF");
D. the Kitsap silt loam ("KpD");
E. the Ovall gravely loam ("OvD" and "OvF");
F. the Ragnar fine sandy loam ("RaD"); and
G. the Ragnar-Indianola Association ("RdE"). (Ord. 10870 § 123, 1993).

21A.06.420 Evergreen. Evergreen: a plant species with foliage that persists and remains green year round. (Ord. 10870 § 124, 1993).

21A.06.425 Examiner. Examiner: the zoning and subdivision examiner as established by K.C.C. 20.24. (Ord. 10870 § 125, 1993).

21A.06.430 Fabric shop. Fabric shop: An establishment engaged in the retail sale of sewing supplies and accessories, including only uses located in SIC Industry Nos.: A. 5949-Sewing, Needlework, and Piece Goods Stores; and
B. Awning Shops, Banner Shops, and Flag Shops found in 5999. (Ord. 10870 § 126, 1993).

21A.06.435 Facilities standard. Facilities standard: the space required by grade span, and taking into account the requirements of students with special needs, which is needed in order to fulfill the educational goals of the school district as identified in the district's capital facilities plan. (Ord. 10870 § 127, 1993).

21A.06.440 Factory-built commercial building. Factory-built commercial building: any structure that is either entirely or substantially prefabricated or assembled at a place other than a building site; and designed or used for non-residential human occupancy. (Ord. 10870 § 128, 1993).

21A.06.445 Fairground. Fairground: a site permanently designated and improved for holding a county fair, as provided in RCW Chapters 15.76 and 36.37, or for holding similar events, including, but not limited to:
A. Carnivals;
B. Circuses;
C. Expositions;
D. Animal shows; and
E. Exhibitions and/or demonstrations of farm and home products with accompanying entertainment and amusements. (Ord. 10870 § 129, 1993).

21A.06.450 Family. Family: an individual; two or more persons related by blood or marriage; a group of two or more disabled residents protected under the Federal Housing Act Amendments, who are not related by blood or marriage, living together as a single housekeeping unit; a group of eight or fewer residents, who are not related by blood or marriage, living together as a single housekeeping unit; or a group living arrangement where eight or fewer residents receive supportive services such as counseling, foster care, or medical supervision at the dwelling unit by resident or non-resident staff. For purposes of this definition, minors living with parent shall not be counted as part of the maximum number of residents. (Ord. 11621 § 30, 1994: Ord. 10870 § 130, 1993).

21A.06.455 Federal Emergency Management Agency ("FEMA") floodway. Federal Emergency Management Agency ("FEMA") floodway: the channel of the stream and that portion

of the adjoining floodplain which is necessary to contain and discharge the base flood flow without increasing the base flood elevation more than one foot. (Ord. 10870 § 131, 1993).

21A.06.460 Feed Store. Feed Store: an establishment engaged in retail sale of supplies directly related to the day to day activities of agricultural production. (Ord. 10870 § 132, 1993).

21A.06.465 Fence. Fence: a barrier for the purpose of enclosing space or separating lots, composed of:

A. Masonry or concrete walls, excluding retaining walls; or

B. Wood, metal or concrete posts connected by boards, rails, panels, wire or mesh. (Ord. 10870 § 133, 1993).

21A.06.467 Financial guarantee. "Financial guarantee" means a form of financial security posted to ensure timely and proper completion of improvements, to ensure compliance with the King County Code, and/or to warranty materials, workmanship of improvements, and design. Financial guarantees include assignments of funds, cash deposit, and surety bonds, and or other forms of financial security acceptable to the director. For the purposes of this title, the terms performance guarantee, maintenance guarantee, and defect guarantee are considered sub-categories of financial guarantee. (Ord. 12020 § 32, 1995).

21A.06.470 Flood fringe. Flood fringe: that portion of the floodplain outside of the zero-rise floodway which is covered by floodwaters during the base flood, generally associated with standing water rather than rapidly flowing water. (Ord. 10870 § 134, 1993).

21A.06.475 Flood hazard areas. Flood hazard areas: those areas in King County subject to inundation by the base flood and those areas subject to risk from channel relocation or stream meander including, but not limited to, streams, lakes, wetlands and closed depressions. (Ord. 11621 § 31, 1994: Ord. 10870 § 135, 1993).

21A.06.480 Flood insurance rate map. Flood insurance rate map: the official map on which the Federal Insurance Administration has delineated some areas of flood hazard. (Ord. 11157 § 3, 1993: Ord. 10870 § 136, 1993).

21A.06.485 Flood insurance study for King County. Flood insurance study for King County: the official report provided by the Federal Insurance Administration which includes flood profiles and the Flood Insurance Rate Map. (Ord. 11157 § 4, 1993: Ord. 10870 § 137, 1993).

21A.06.490 Flood protection elevation. Flood protection elevation: an elevation which is one foot above the base flood elevation. (Ord. 10870 § 138, 1993).

21A.06.495 Floodplain. Floodplain: the total area subject to inundation by the base flood. (Ord. 10870 § 139, 1993).

21A.06.500 Floodproofing. Floodproofing: adaptations which will make a structure that is below the flood protection elevation substantially impermeable to the passage of water and resistant to hydrostatic and hydrodynamic loads including the impacts of buoyancy. (Ord. 10870 § 140, 1993).

21A.06.505 Floodway, zero-rise. Floodway zero-rise: the channel of a stream and that portion of the adjoining floodplain which is necessary to contain and discharge the base flood flow without any measurable increase in flood height. A measurable increase in base flood height means a calculated upward rise in the base flood elevation, equal to or greater than .01 foot, resulting from a comparison of existing conditions and changed conditions directly attributable to

development in the floodplain. This definition is broader than that of the FEMA floodway, but always includes the FEMA floodway. The boundaries of the 100-year floodplain, as shown on the Flood Insurance Study for King County, are considered the boundaries of the zero-rise floodway unless otherwise delineated by a sensitive area special study. (Ord. 10870 § 141, 1993).

21A.06.510 Florist shop. Florist shop: An establishment engaged in the retail sale of flowers and plants, including only uses located in SIC Industry Nos.:

A. 5992-Florists; and

B. 5999-Artificial Flowers. (Ord. 10870 § 142, 1993).

21A.06.515 Forest land. Forest land: land devoted primarily to growing and harvesting forest and timber products and designated as a forest production district by the King County Comprehensive Plan. (Ord. 10870 § 143, 1993).

21A.06.520 Forest practice. Forest practice: any activity regulated by the Washington Department of Natural Resources in Washington Administrative Code ("WAC") 222 or RCW 79.06 for which a forest practice permit is required, together with:

A. Fire prevention, detection and suppression; and,

B. Slash burning or removal. (Ord. 10870 § 144, 1993).

21A.06.525 Forest product sales. Forest product sales: the sale of goods produced, extracted, consumed, gathered or harvested from a forest including, but not limited to:

A. Trees;

B. Wood chips;

C. Logs;

D. Fuelwood;

E. Cones;

F. Christmas trees;

G. Berries;

H. Herbs; or

I. Mushrooms. (Ord. 10870 § 145, 1993).

21A.06.530 Forest research. Forest research: The performance of scientific studies relating to botany, hydrology, silviculture, biology and other branches of science in relation to management of forest lands, including only uses located in SIC Industry Nos:

A. 8731-Commercial Physical and Biological Research;

B. 8733-Noncommercial Research Organizations; and

C. 8734-Testing Laboratories. (Ord. 10870 § 146, 1993).

21A.06.533 Fully contained community (FCC). FCC: A site specific development project consisting of conceptual site plan(s), development standards, processing and other elements, and which is consistent with the criteria provided in RCW 36.70A.350. (Ord. 12171 § 3, 1996).

21A.06.535 Furniture and Home Furnishings store. Furniture and Home furnishings store: An establishment engaged in the retail sale of household furniture and furnishings for the home, including only uses located in SIC Major Group and Industry Nos.:

A. 57-Home Furniture, Furnishings, and Equipment Stores, except Industry Group No. 573; and

B. Baby carriages, Cake Decorating Supplies, Hot Tubs, Picture Frames (ready made), Swimming Pools (above-ground, not site-built), Telephone Stores and Typewriter Stores found in 5999. (Ord. 10870 § 147, 1993).

21A.06.540 General business service. General business service: An establishment engaged in providing services to businesses or individuals, with no outdoor storage or fabrication, including only uses located in SIC Major Group Nos.:

A. 60-Depository Institutions;
B. 61-Nondepository Credit Institutions;
C. 62-Security and Commodity Brokers, Dealers, Exchanges, and Services;
D. 63-Insurance Carriers;
E. 65-Real Estate, except 653 (Real Estate Agents and Directors);
F. 67-Holding and Other Investment Offices;
G. 7299 Miscellaneous Personal Services, not elsewhere classified;
H. 73-Business Services, except Industry Group and Industry Nos.:
I. 7312-Outdoor Advertising Services; and
J. 86-Membership Organizations, including administrative offices of organized religions found in 8661, but excluding churches and places of worship. (Ord. 10870 § 148, 1993).

21A.06.545 Geologist. Geologist: a person who has earned at least a Bachelor of Science degree in the geological sciences from an accredited college or university or who has equivalent educational training and at least four years of professional experience. (Ord. 10870 § 149, 1993).

21A.06.550 Geotechnical engineer. Geotechnical engineer: a practicing geotechnical/civil engineer licensed as a professional civil engineer by the State of Washington who has at least four years of professional employment as a geotechnical engineer. (Ord. 10870 § 150, 1993).

21A.06.555 Golf course facility. Golf course facility: a recreational facility, under public or private ownership, designed and developed for golf activities with accessory uses including, but not limited to:

A. A driving range;
B. Miniature golf;
C. Pro shops;
D. Caddyshack buildings;
E. Swimming pools, tennis courts and other related recreational facilities;
F. Restaurants;
G. Office and meeting rooms; and
H. Related storage facilities. (Ord. 11157 § 5, 1993: Ord. 10870 § 151, 1993).

21A.06.560 Grade span. Grade span: the categories into which a district groups its grades of students; i.e., elementary, middle or junior high school, and high school. (Ord. 10870 § 152, 1993).

21A.06.565 Grading. Grading: any excavation, filling, removing the duff layer or any combination thereof. (Ord. 10870 § 153, 1993).

21A.06.570 Grazing area. A grazing area is any open land area used to pasture livestock in which suitable forage is maintained over 80% of the area at all times of the year. (Ord. 11157 § 6, 1993: Ord. 10870 § 154, 1993).

21A.06.575 Groundcover. Groundcover: living plants designed to grow low to the ground (generally one foot or less) and intended to stabilize soils and protect against erosion. (Ord. 10870 § 155, 1993).

21A.06.580 Hazardous household substance. Hazardous household substance: a substance as defined in RCW 70.105.010. (Ord. 10870 § 156, 1993).

21A.06.585 Hazardous substance. Hazardous substance: a substance as defined in RCW 70.105.010. (Ord. 10870 § 157, 1993).

21A.06.590 Heavy equipment and truck repair. Heavy equipment and truck repair: the repair and maintenance of self-powered, self-propelled or towed mechanical devices, equipment and vehicles used for commercial purposes, such as tandem axle trucks, graders, backhoes, tractor trailers, cranes, lifts, but excluding automobiles, and pick-up trucks under 10,000 pounds, recreational vehicles, boats and their trailers. (Ord. 11621 § 32, 1994: Ord. 10870 § 158, 1993).

21A.06.595 Helistop. Helistop: an area on a roof or on the ground used for the takeoff and landing of helicopters for the purpose of loading or unloading passengers or cargo but not including fueling service, hangers, maintenance or overhaul facilities. (Ord. 10870 § 159, 1993).

21A.06.597 Historic resource. Historic resource: a district, site, building, structure or object significant in national, state or local history, architecture, archaeology, and culture. (Ord. 11621 § 22, 1994).

21A.06.598 Historic resource inventory. Historic resource inventory: an organized compilation of information on historic resources considered to be potentially significant according to the criteria listed in K.C.C. 20.62.040.A. The historic resource inventory is kept on file by the historic preservation officer and is updated from time to time to include newly eligible resources and to reflect changes to resources. (Ord. 11621 § 23, 1994).

21A.06.600 Hobby, toy, and game shop. Hobby, toy, and game shop: An establishment engaged in the retail sale of toys, games, hobby and craft kits, including only uses located in SIC Industry Nos.:

A. 5945-Hobby, Toy and Game Shops; and

B. 5999-Autograph and Philatelist Supply Stores, Coin Shops, and Stamps, philatelist-retail (except mail order). (Ord. 10870 § 160, 1993).

21A.06.605 Home industry. Home industry: a limited-scale sales, service or fabrication activity undertaken for financial gain, which occurs in a dwelling unit or residential accessory building, or in a barn or other resource accessory building and is subordinate to the primary use of the site as a residence. (Ord. 13022 § 7, 1998: Ord. 10870 § 161, 1993).

21A.06.610 Home occupation. Home occupation: a limited-scale service or fabrication activity undertaken for financial gain, which occurs in a dwelling unit or accessory building and is subordinate to the primary use of the site as a residence. (Ord. 13022 § 8, 1998: Ord. 10870 § 162, 1993).

21A.06.615 Household pets. Household pets: small animals that are kept within a dwelling unit. (Ord. 10870 § 163, 1993).

21A.06.620 Hydroelectric generation facility. Hydroelectric generation facility: an establishment for the generation of electricity using water sources. (Ord. 10870 § 164, 1993).

21A.06.625 Impervious surface. Impervious surface: For purposes of this title, impervious surface shall mean any nonvertical surface artificially covered or hardened so as to prevent or impede the percolation of water into the soil mantle at natural infiltration rates including, but not limited to, roofs, swimming pools, areas which are paved, graveled or made of packed or oiled earthen materials such as roads, walkways or parking areas and excluding landscaping, surface water flow control and water quality treatment facilities, access easements serving neighboring property and driveways to the extent that they extend beyond the street setback due to location

within an access panhandle or due to the application of King County Code requirements to site features over which the applicant has no control. (Ord. 13190 § 14, 1998: Ord. 11978 § 3, 1995: Ord. 11802 § 2, 1995: Ord. 10870 § 165, 1993).

21A.06.630 Improved public roadways. Improved public roadways: public road rights-of-way that have been improved with at least two travel lanes and are maintained by either King County or the state of Washington. (Ord. 10870 § 166, 1993).

21A.06.635 Individual transportation and taxi. Individual transportation and taxi: An establishment engaged in furnishing individual or small group transportation by motor vehicle, including only uses located in SIC Industry Group and Industry Nos.:

A. 412-Taxicabs; and

B. 4119-Local Passenger Transportation, not elsewhere Classified. (Ord. 10870 § 167, 1993).

21A.06.637 Infiltration rate. Infiltration rate: the rate of water entry into the soil expressed in inches per hour. (Ord. 11210 § 27, 1994).

21A.06.640 Interim recycling facility. Interim recycling facility: A site or establishment engaged in collection or treatment of recyclable materials, which is not the final disposal site, and including:

A. Drop boxes;

B. Source-separated, organic waste processing facilities; and

C. Collection, separation and shipment of glass, metal, paper or other recyclables. (Ord. 10870 § 168, 1993).

21A.06.641 Interlocal agreement. Interlocal agreement: for purposes of K.C.C. 21A.28, interlocal agreement means any agreement between the county, the district, and any city setting forth certain terms relating to the collection of impact fees by the county and distribution of those fees to the district. An interlocal agreement shall not be required where the county is the sole jurisdiction within the boundaries of the district that is assessing impact fees. (Ord. 11621 § 24, 1994).

21A.06.642 Irrigation efficiency. Irrigation efficiency: is the coefficient of the amount of water beneficially used divided by the amount of water applied. This coefficient is derived from actual measurements and an evaluation of the general characteristics of the type of irrigation system and management practices proposed. (Ord. 11210 § 26, 1994).

21A.06.645 Jail. Jail: a facility operated by a governmental agency; designed, staffed and used for the incarceration of persons for the purposes of punishment, correction and rehabilitation following conviction of an offense. (Ord. 10870 § 169, 1993).

21A.06.650 Jail farm. Jail farm: a farm or camp on which persons convicted of minor law violations are confined and participate in agriculture and other work activities of the facility. (Ord. 10870 § 170, 1993).

21A.06.655 Jewelry store. Jewelry Store: an establishment engaged in the retail sale of a variety of jewelry products, including only uses located in SIC Industry Nos.:

A. 5944-Jewelry Stores; and

B. Gem stones and Rock specimens found in 5999. (Ord. 10870 § 171, 1993).

21A.06.658 Joint use driveway. Joint use driveway: a jointly owned and/or maintained vehicular access to two residential properties. (Ord 11621 § 25, 1994).

21A.06.660 Kennel. Kennel: a place where adult dogs are temporarily boarded for compensation, whether or not for training. An adult dog is one of either sex, altered or unaltered, that has reached the age of six months. (Ord. 10870 § 172, 1993).

21A.06.662 Kitchen or kitchen facility. Kitchen or kitchen facility: an area within a building intended for the preparation and storage of food and containing:

A. An appliance for the refrigeration of food;

B. An appliance for the cooking or heating of food; and

C. A sink. (Ord. 12786 § 1, 1997).

21A.06.665 Landfill. Landfill: a disposal site or part of a site at which refuse is deposited. (Ord. 10870 § 173, 1993).

21A.06.667 Landscape water features. Landscape water features: a pond, pool or fountain used as a decorative component of a development. (Ord. 11210 § 28, 1994).

21A.06.670 Landscaping. Landscaping: live vegetative materials required for a development. Said materials provided along the boundaries of a development site is referred to as perimeter landscaping. (Ord. 11210 § 36, 1994: Ord. 10870 § 174, 1993).

21A.06.675 Landslide. Landslide: episodic downslope movement of a mass including, but not limited to, soil, rock or snow. (Ord. 10870 § 175, 1993).

21A.06.680 Landslide hazard areas. Landslide hazard areas: those areas in King County subject to severe risks of landslides, including the following:

A. Any area with a combination of:

1. slopes steeper than 15%;

2. impermeable soils, such as silt and clay, frequently interbedded with granular soils, such as sand and gravel; and

3. springs or ground water seepage;

B. Any area which has shown movement during the Holocene epoch, from 10,000 years ago to the present, or which is underlain by mass wastage debris from that epoch;

C. Any area potentially unstable as a result of rapid stream incision, stream bank erosion or undercutting by wave action;

D. Any area which shows evidence of or is at risk from snow avalanches; or

E. Any area located on an alluvial fan, presently subject to or potentially subject to inundation by debris flows or deposition of stream-transported sediments. (Ord. 10870 § 176, 1993).

21A.06.685 Level of service, traffic. Level of service ("LOS")traffic: A quantitative measure of traffic congestion identified by a declining letter scale (A-F) as calculated by the methodology contained in the 1985 Highway Capacity Manual Special Report 209 or as calculated by another method approved by the department of public works LOS "A" indicates free flow of traffic with no delays while LOS "F" indicates jammed conditions or extensive delay. (Ord. 10870 § 177, 1993).

21A.06.690 Light equipment. Light equipment: hand-held tools and construction equipment, such as chain saws, wheelbarrows and post-hole diggers. (Ord. 10870 § 178, 1993).

21A.06.695 Livestock. Livestock: grazing animals kept either in open fields or structures for training, boarding, home use, sales, or breeding and production, including but not limited to:

A. Cattle;

B. Riding and draft horses;

C. Hogs, excluding pigs weighing under 120 lbs and standing 20 inches or less at the shoulder which are kept as pets or small animals;

D. Sheep; and

E. Goats. (Ord. 10870 § 179, 1993).

21A.06.700 Livestock, large. livestock, large: cattle, horses, and other livestock generally weighing over 500 pounds. (Ord. 10870 § 180, 1993).

21A.06.705 Livestock, small. livestock, small: hogs, excluding pigs weighing under 120 lbs and standing 20 inches or less at the shoulder which are kept as household pets or small animals, sheep, goats, miniature horses, llamas, alpaca and other livestock generally weighing under 500 pounds. (Ord. 10870 § 181, 1993).

21A.06.710 Livestock sales. Livestock sales: the sale of livestock but not including auctions. (Ord. 10870 § 182, 1993).

21A.06.715 Loading space. Loading space: a space for the temporary parking of a vehicle while loading or unloading cargo or passengers. (Ord. 10870 § 183, 1993).

21A.06.720 Log storage. Log storage: a facility for the open or enclosed storage of logs which may include repair facilities for equipment used on-site or operations offices. (Ord. 10870 § 184, 1993).

21A.06.725 Lot. Lot: a physically separate and distinct parcel of property, which has been created pursuant to K.C.C. Title 19, Subdivision. (Ord. 10870 § 185, 1993).

21A.06.730 Lot line, interior. Lot line, interior: lot lines that delineate property boundaries along those portions of the property which do not abut a street. (Ord. 10870 § 186, 1993).

21A.06.735 Marina. Marina: an establishment providing docking, moorage space and related activities limited to the provisioning or minor repair of pleasure boats and yachts; and accessory facilities including, but not limited to:

A. Showers;

B. Toilets; and

C. Self-service laundries. (Ord. 10870 § 187, 1993).

21A.06.740 Material Error. Material Error: substantive information upon which a permit decision is based that is submitted in error or is omitted at the time of permit application. (Ord. 10870 § 188, 1993).

21A.06.745 Microwave. Microwave: electromagnetic waves with a frequency range of 300 megahertz (MHz) to 300 gigahertz (GHz). (Ord. 10870 § 189, 1993).

21A.06.750 Mitigation. Mitigation: the use of any or all of the following actions listed in descending order of preference:

A. Avoiding the impact by not taking a certain action;

B. Minimizing the impact by limiting the degree or magnitude of the action by using appropriate technology or by taking affirmative steps to avoid or reduce the impact;

C. Rectifying the impact by repairing, rehabilitating or restoring the affected sensitive area or buffer;

D. Reducing or eliminating the impact over time by preservation or maintenance operations during the life of the development proposal;

E. Compensating for the impact by replacing, enhancing or providing substitute sensitive areas and environments; and

F. Monitoring the impact and taking appropriate corrective measures. (Ord. 10870 § 190, 1993).

21A.06.751 Mitigation bank. Mitigation bank: a property that has been protected in perpetuity, and approved by appropriate county, state and federal agencies expressly for the purpose of providing compensatory mitigation in advance of authorized impacts through restoration, creation, and/or enhancement of wetlands, and in exceptional circumstances, preservation of adjacent wetlands, wetland buffers, and/or other aquatic resources. (Ord. 11621 § 26, 1994).

21A.06.752 Mitigation banking. Mitigation banking: a system for providing compensatory mitigation in advance of authorized wetland impacts of development in King County in which credits are generated through restoration, creation, and/or enhancement of wetlands, and in exceptional circumstances, preservation of adjacent wetlands, wetland buffers, and/or other aquatic resources. (Ord. 11621 § 27, 1994).

21A.06.755 Mobile home. Mobile home: a structure transportable in one or more sections; that in the traveling mode is eight body feet or more in width or 32 body feet or more in length; or when erected on site, is 320 square feet or more in area; built on a permanent chassis; designed to be used as a dwelling unit, with or without permanent foundation, when connected to the required utilities; which contains plumbing, heating, air-conditioning and electrical systems; and shall include any structure that meets all the requirements of this section, or of WAC 296-150B, except the size requirements for which the manufacturer voluntarily complies with the standards and files the certification required by the Department of Housing and Urban Development ("HUD"). (Ord. 10870 § 191, 1993).

21A.06.760 Mobile home park. Mobile home park: a development with two or more improved pads or spaces designed to accommodate mobile homes. (Ord. 10870 § 192, 1993).

21A.06.765 Monitoring. Monitoring: evaluating the impacts of development proposals on biologic, hydrologic and geologic systems and assessing the performance of required mitigation through the collection and analysis of data for the purpose of understanding and documenting changes in natural ecosystems, functions and features including, but not limited to, gathering baseline data. (Ord. 10870 § 193, 1993).

21A.06.770 Monuments, tombstones, and gravestones sales. Monuments, tombstones, and gravestones sales: the retail sale of custom stonework products including only uses located in SIC Industry No. 5599-Monuments, finished to custom order, Tombstones and Gravestones finished. (Ord. 10870 § 194, 1993).

21A.06.775 Motor vehicle, boat and mobile home dealer. Motor vehicle, boat and mobile home dealer: An establishment engaged in the retail sale of new and/or used automobiles, motor homes, motorcycles, trailers, boats or mobile homes, including only uses located in SIC Major Group and Industry Group Nos.:

A. 55-Automotive Dealers and Gasoline Service Stations except:
   1. 553-Auto and Home Supply Stores;
   2. 554-Gasoline Service Stations; and

B. Aircraft dealers found in 5599:
   1. 527-Mobile Home Dealers; and
   2. Yacht brokers found in 7389. (Ord. 10870 § 195, 1993).

21A.06.780 Motor vehicle and bicycle manufacturing. Motor vehicle and bicycle manufacturing: fabricating or assembling complete passenger automobiles, trucks, commercial cars and buses, motorcycles, and bicycles, including only uses located in SIC Industry Group Nos.:

A. 371-Motor Vehicles and Motor Vehicle Equipment; and

B. 375-Motorcycles, Bicycles, and Parts. (Ord. 10870 § 196, 1993).

21A.06.782 Mulch. Mulch: any material such as leaves, bark, straw left loose and applied to the soil surface to reduce evaporation. (Ord. 11210 § 29, 1994).

21A.06.785 Municipal water production. Municipal water production: The collection and processing of surface water through means of dams or other methods of impoundment for municipal water systems. (Ord. 11157 § 7, 1993: Ord. 10870 § 197, 1993).

21A.06.790 Native vegetation. Native vegetation: vegetation comprised of plant species, other than noxious weeds, which are indigenous to the coastal region of the Pacific Northwest and which reasonably could have been expected to naturally occur on the site. (Ord. 10870 § 198, 1993).

21A.06.795 Naturalized species. Naturalized species: non-native species of vegetation that are adaptable to the climatic conditions of the coastal region of the Pacific Northwest. (Ord. 10870 § 199, 1993).

21A.06.797 Net buildable area. Net buildable area shall be the site area less the following areas:

A. Areas within a project site which are required to be dedicated for public rights-of-way in excess of sixty feet (60') in width;

B. Sensitive areas and their buffers, to the extent they are required by King County to remain undeveloped;

C. Areas required for storm water control facilities other than facilities which are completely underground, including but not limited to, retention/detention ponds, biofiltration swales and setbacks from such ponds and swales;

D. Areas required by King County to be dedicated or reserved as on-site recreation areas;

E. Regional utility corridors;

F. Other areas, excluding setbacks, required by King County to remain undeveloped. (Ord. 11798 § 3, 1995: Ord. 11555 § 2, 1994).

21A.06.800 Nonconformance. Nonconformance: any use, improvement or structure established in conformance with King County rules and regulations in effect at the time of establishment that no longer conforms to the range of uses permitted in the site's current zone or to the current development standards of the code due to changes in the code or its application to the subject property. (Ord. 10870 § 200, 1993).

21A.06.805 Nonhydro-electric generation facility. Nonhydro-electric generation facility: an establishment for the generation of electricity by nuclear reaction, burning fossil fuels, or other electricity generation methods. (Ord. 10870 § 201, 1993).

21A.06.810 Non-ionizing electromagnetic radiation ("NIER"). Non-ionizing electromagnetic radiation ("NIER"): electromagnetic radiation of low photon energy unable to cause ionization. (Ord. 10870 § 202, 1993).

21A.06.815 Noxious weed. Noxious weed: any plant which is highly destructive, competitive or difficult to control by cultural or chemical practices, limited to those plants on the state noxious weed list contained in WAC 16-750. (Ord. 10870 § 203, 1993).

21A.06.817 Off-street required parking lot. Off-street required parking lot: parking facilities constructed to meet the off-street parking requirements of K.C.C. 21A.18 for land uses located on a lot separate from the parking facilities. (Ord. 13022 § 4, 1998).

21A.06.820 Open-work fence. Open-work fence: a fence in which the solid portions are evenly distributed and constitute no more than fifty (50) percent of the total surface area. (Ord. 10870 § 204, 1993).

21A.06.825 Ordinary high water mark. Ordinary high water mark: the mark found by examining the bed and banks of a stream, lake, or tidal water and ascertaining where the presence and action of waters are so common and long maintained in ordinary years as to mark upon the soil a vegetative character distinct from that of the abutting upland. In any area where the ordinary high water mark cannot be found, the line of mean high water shall substitute. In any area where neither can be found, the top of the channel bank shall substitute. In braided channels and alluvial fans, the ordinary high water mark or line of mean high water shall be measured so as to include the entire stream feature. (Ord. 10870 § 205, 1993).

21A.06.830 Outdoor performance center. Outdoor performance center: an establishment for the performing arts with open-air seating for audiences. Such establishments may include related services such as food and beverage sales and other concessions. (Ord. 10870 § 206, 1993).

21A.06.831 Overburden-cover-to-seam-thickness ratio. Overburden-cover-to-seam-thickness ratio: the thickness as measured from the ground surface to the top of the abandoned mine working divided by the extracted thickness of the coal seam, expressed as a ratio. A ten foot extracted coal seam will have a 10:1 overburden-cover-to-seam-thickness ratio at a depth of one hundred feet and a 15:1 overburden-cover-to-seam-thickness ratio at a depth of one hundred fifty feet. (Ord. 13319 § 4, 1998).

21A.06.832 Overspray. Overspray: irrigation water applied beyond the landscape area. (Ord. 11210 § 30, 1994).

21A.06.835 Park. Park: a site designed or developed for recreational use by the public including, but not limited to:

A. Indoor facilities, such as:
   1. Gymnasiums
   2. Swimming pools; or
   3. Activity centers;
B. Outdoor facilities, such as:
   1. Playfields;
   2. Fishing areas;
   3. Picnic and related outdoor activity areas; or
   4. Approved campgrounds;
C. Areas and trails for:
   1. Hikers;
   2. Equestrians;
   3. Bicyclists; or
   4. Off-road recreational vehicle users;
D. Recreation space areas required under K.C.C. 21A.14.180;
E. Play areas required under K.C.C. 21A.14.190; and
F. Facilities for on-site maintenance. (Ord. 13022 § 9, 1998: Ord. 10870 § 207, 1993).

21A.06.840 Park service area. Park service area: established by the department, within which the dedications of land and fees received from new residential developments for the benefit of residents within such service area. (Ord. 10870 § 208, 1993).

21A.06.845 Parking lot aisle. Parking lot aisle: that portion of the off-street parking area used exclusively for the maneuvering and circulation of motor vehicles and in which parking is prohibited. (Ord. 10870 § 209, 1993).

21A.06.850 Parking lot unit depth. Parking lot unit depth: the linear distance within which one parking aisle is flanked by accessible rows of parking stalls as measured perpendicular to the parking aisle. (Ord. 10870 § 210, 1993).

21A.06.855 Parking space. Parking space: an area accessible to vehicles, improved, maintained and used for the sole purpose of parking a motor vehicle. (Ord. 10870 § 211, 1993).

21A.06.860 Parking space angle. Parking space angle: the angle measured from a reference line, generally the property line or center line of an aisle, at which motor vehicles are to be parked. (Ord. 10870 § 212, 1993).

21A.06.865 Party of record. Party of record ("POR"): A person who has submitted written comments, testified, asked to be notified or is the sponsor of a petition entered as part of the official county record on a specific development proposal. (Ord. 10870 § 213, 1993).

21A.06.870 Peak hour. Peak hour: The hour during the morning or afternoon when the most critical level of service occurs for a particular roadway or intersection. (Ord. 10870 § 214, 1993).

21A.06.875 Permanent school facilities. Permanent school facilities: facilities of a school district with a fixed foundation which are not relocatable facilities. (Ord. 10870 § 215, 1993).

21A.06.880 Personal medical supply store. Personal medical supply store: An establishment engaged in the retail sale of eyeglasses, contact lenses, hearing aids, and artificial limbs, including only uses located in SIC Industry Nos.:

A. 5995-Optical Goods Stores; and

B. 5999-Hearing Aids and Orthopedic and Artificial Limb Stores. (Ord. 10870 § 216, 1993).

21A.06.885 Pet shop. Pet shop: An establishment engaged in the retail sale of pets, small animals, pet supplies, or grooming of pets, including only uses located in SIC Industry No. 5999-Pet shops. (Ord. 10870 § 217, 1993).

21A.06.890 Photographic and electronic shop. Photographic and electronic shop: An establishment engaged in the retail sale of cameras and photographic supplies, and a variety of household electronic equipment, including only uses located in SIC Industry No.:

A. 5946 - Camera and Photographic Supply Stores;

B. 5999 - Binoculars and Telescopes;

C. 5731 - Radio, Television, and Consumer Electronics Stores; and

D. 5734 - Computer and Computer Software Stores. (Ord. 10870 § 218, 1993).

21A.06.895 Plant associations of infrequent occurrence. Plant associations of infrequent occurrence: one or more plant species of a landform type which does not often occur in King County because of the rarity of the habitat and/or the species involved or for other botanical or environmental reasons. (Ord. 10870 § 219, 1993).

21A.06.897 Plant factor. Plant factor: a factor which when multiplied by reference evapotranspiration, estimates the amount of water used by plants. (Ord. 11210 § 31, 1994).

21A.06.899 Potable water. Potable water: water suitable for human consumption. (Ord. 11210 § 32, 1994).

21A.06.900 Private. Private: solely or primarily for the use of residents or occupants of the premises; e.g., a non-commercial garage used solely by residents or their guests is a private garage. (Ord. 10870 § 220, 1993).

21A.06.905 Private stormwater management facility. Private stormwater management facility: a surface water control structure installed by a project proponent to retain, detain or otherwise limit runoff from an individual or group of developed sites specifically served by such structure. (Ord. 10870 § 221, 1993).

21A.06.910 Professional office. Professional office: an office used as a place of business by licensed professionals, or persons in other generally recognized professions, which use training or knowledge of a technical, scientific or other academic discipline as opposed to manual skills, and which does not involve outside storage or fabrication, or on-site sale or transfer of commodities; including only the following SIC Major Group and Industry Nos.:

A. 64-Insurance Agents, Brokers and Service;
B. 653-Real Estate Agents and Directors;
C. 7291-Income Tax Return Preparation Services;
D. 81-Legal Services;
E. 871-Engineering, Architectural and Surveying Services;
F. 872-Accounting, Auditing and Bookkeeping Services; and
G. 874-Management and Public Relations Services. (Ord. 10870 § 222, 1993).

21A.06.915 Public agency. Public agency: any agency, political subdivision or unit of local government of this state including, but not limited to, municipal corporations, special purpose districts and local service districts, any agency of the State of Washington, the United States or any state thereof or any Indian tribe recognized as such by the federal government. (Ord. 10870 § 223, 1993).

21A.06.920 Public agency animal control facility. Public agency animal control facility: a facility for the impoundment and disposal of stray or abandoned small animals. (Ord. 10870 § 224, 1993).

21A.06.925 Public agency archive. Public agency archive: a facility for the enclosed storage of public agency documents or related materials, excluding storage of vehicles, equipment, or similar materials. (Ord. 10870 § 225, 1993).

21A.06.930 Public agency or utility office. Public agency or utility office: an office for the administration of any governmental or utility activity or program, with no outdoor storage and including, but not limited to uses located in SIC Major Group, Industry Group and Industry Nos.:

A. 91-Executive, Legislative, and General Government, except Finance;
B. 93-Public Finance, Taxation, and Monetary Policy;
C. 94-Administration of Human Resource Programs;
D. 95-Administration of Environmental Quality and Housing Program;
E. 96-Administration of Economic Programs;
F. 972-International Affairs;
G. 9222-Legal Counsel and Prosecution; and
H. 9229-Public Order and Safety. (Ord. 10870 § 226, 1993).

21A.06.935 Public agency or utility yard. Public agency or utility yard: a facility for open or enclosed storage, repair, and maintenance of vehicles, equipment, or related materials, excluding document storage. (Ord. 10870 § 227, 1993).

21A.06.940 Public agency training facility. Public agency training facility: an establishment or school for training state and local law enforcement, fire safety, national guard or transit personnel and facilities including but not limited to:

A. Dining and overnight accommodations;
B. Classrooms;
C. Shooting ranges;
D. Auto test tracks; and
E. Fire suppression simulations. (Ord. 10870 § 228, 1993).

21A.06.945 Radio frequency. Radio frequency: the number of times the current from a given source of non-ionizing electromagnetic radiation changes from a maximum positive level through a maximum negative level and back to a maximum positive level in one second; measured in cycles per second or Hertz ("Hz"). (Ord. 10870 § 229, 1993).

21A.06.950 Reasonable use. Reasonable use: a legal concept articulated by federal and state courts in regulatory taking cases. (Ord. 10870 § 230, 1993).

21A.06.955 Receiving site. Receiving site: land for which allowable residential density is increased over the base density permitted by the underlying zone, by virtue of permanently securing and dedicating to King County, or another qualifying agency, the development potential of an associated sending site. (Ord. 10870 § 231, 1993).

21A.06.960 Recreational vehicle ("RV"). Recreational vehicle ("RV"): a vehicle designed primarily for recreational camping, travel or seasonal use which has its own motive power or is mounted on or towed by another vehicle, including but not limited to:

A. Travel trailer;
B. Folding camping trailer;
C. Park trailer;
D. Truck camper;
E. Park trailer;
F. Motor home; and
G. Multi-use vehicle. (Ord. 10870 § 232, 1993).

21A.06.965 Recreational vehicle parks. Recreational vehicle parks: The use of land upon which two or more recreational vehicle sites, including hook up facilities, are located for occupancy by the general public of recreational vehicles as temporary living quarters for recreation or vacation purposes. (Ord. 10870 § 233, 1993).

21A.06.970 Recyclable material. Recyclable material: a non-toxic, recoverable substance that can be re-processed for the manufacture of new products. (Ord. 10870 § 234, 1993).

21A.06.972 Reference evapotranspiration (Eto). Reference evapotranspiration (Eto): a standard measurement of environmental parameters which affect the water use of plants. (Ord. 11210 § 33, 1994).

21A.06.975 Regional stormwater management facility. Regional stormwater management facility: a surface water control structure installed in or adjacent to a stream or wetland of a basin or sub-basin by the surface water management ("SWM") division or a project proponent. Such

facilities protect downstream areas identified by SWM as having previously existing or predicted significant regional basin flooding or erosion problems. (Ord. 10870 § 235, 1993).

21A.06.980 Regional utility corridor. Regional utility corridor: a right-of-way tract or easement other than a street right-of-way which contains transmission lines or pipelines for utility companies. Right-of-way tracts or easements containing lines serving individual lots or developments are not regional utility corridors. (Ord. 10870 § 236, 1993).

21A.06.985 Relocatable facilities cost per student. Relocatable facilities cost per student: the estimated cost of purchasing and siting a relocatable facility in a school district for the grade span of school to be provided, as a function of the district's facilities standard per grade span and taking into account the requirements of students with special needs. (Ord. 10870 § 237, 1993).

21A.06.990 Relocatable facility. Relocatable facility: any factory-built structure, transportable in one or more sections that is designed to be used as an education space and is needed to prevent the overbuilding of school facilities, to meet the needs of service areas within a district or to cover the gap between the time that families move into new residential developments and the date that construction is completed on permanent school facilities. (Ord. 10870 § 238, 1993).

21A.06.995 Relocation facilities. Relocation facilities: housing units within King County that provide housing to persons who have been involuntarily displaced from other housing units within King County as a result of conversion of their housing unit to other land uses. (Ord. 10870 § 239, 1993).

21A.06.1000 Restoration. Restoration: returning a stream, wetland, other sensitive area or any associated buffer to a state in which its stability and functions approach its unaltered state as closely as possible. (Ord. 10870 § 240, 1993).

21A.06.1005 Retail, comparison. Retail, comparison. provides for the sale of comparison good and services and is centrally located in the community or region. (Ord. 10870 § 241, 1993).

21A.06.1010 Retail, convenience. Retail, convenience. provides for daily living goods, is easy to access and use and is close to residential neighborhoods. (Ord. 10870 § 242, 1993).

21A.06.1011 Retaining wall. Retaining wall: any wall used to resist the lateral displacement of any material. (Ord. 12987 § 2, 1998).

21A.06.1012 Runoff. Runoff: water not absorbed by the soil in the landscape area to which it is applied. (Ord. 11210 § 34, 1994).

21A.06.1015 Salmonid. Salmonid: a member of the fish family salmonidae, including:

A. chinook, coho, chum, sockeye and pink salmon;
B. rainbow, steelhead and cutthroat salmon;
C. brown trout;
D. brook and dolly varden char;
E. kokanee; and
F. whitefish. (Ord. 10870 § 243, 1993).

21A.06.1020 School bus base. School bus base: an establishment for the storage, dispatch, repair and maintenance of coaches and other vehicles of a school transit system. (Ord. 10870 § 244, 1993).

21A.06.1025 School district. School district: any school district in King County whose boundaries include unincorporated areas of the county. (Ord. 10870 § 245, 1993).

21A.06.1030 School district support facility. School district support facility: uses (excluding schools and bus bases) that are required for the operation of a school district. This term includes school district administrative offices, centralized kitchens, and maintenance or storage facilities. (Ord. 10870 § 246, 1993).

21A.06.1035 Schools, elementary, and middle/junior high. Schools, elementary, and middle/junior high: institutions of learning offering instruction in the several branches of learning and study required by the Education Code of the State of Washington in grades kindergarten through nine, including associated meeting rooms, auditoriums and athletic facilities. (Ord. 10870 § 247, 1993).

21A.06.1040 Schools, secondary or high school. Schools, secondary or high school: institutions of learning offering instruction in the several branches of learning and study required by the Education Code of the State of Washington in grades nine through twelve, including associated meeting rooms, auditoriums and athletic facilities. (Ord. 10870 § 248, 1993).

21A.06.1045 Seismic hazard areas. Seismic hazard areas: those areas in King County subject to severe risk of earthquake damage as a result of soil liquefaction in areas underlain by cohesionless soils of low density and usually in association with a shallow groundwater table or of other seismically induced settlement. (Ord. 10870 § 249, 1993).

21A.06.1050 Self-service storage facility. Self-service storage facility: an establishment containing separate storage spaces that are leased or rented as individual units. (Ord. 10870 § 250, 1993).

21A.06.1055 Sending site. Sending site: land designated in K.C.C. 21A.36 as capable of providing a public benefit if permanently protected by virtue of having its zoned development potential transferred to another property. (Ord. 10870 § 251, 1993).

21A.06.1060 Senior citizen. Senior citizen: A person aged 62 or older. (Ord. 11157 § 8, 1993: Ord. 10870 § 252, 1993).

21A.06.1062 Senior citizen assisted housing. Senior citizen assisted housing: housing in a building consisting of two or more dwelling units or sleeping units restricted to occupancy by at least one senior citizen per unit, and may include the following support services, as deemed necessary:

A. Food preparation and dining areas;
B. Group activity areas;
C. Medical supervision; and
D. Similar activities. (Ord. 11157 § 9, 1993: Ord. 10870 § 634 (part), 1993).

21A.06.1065 Sensitive areas. Sensitive areas: any of those areas in King County which are subject to natural hazards or those land features which support unique, fragile or valuable natural resources including fishes, wildlife and other organisms and their habitat and such resources which carry, hold or purify water in their natural state. Sensitive areas include coal mine hazard areas, erosion hazard areas, flood hazard areas, landslide hazard areas, seismic hazard areas, steep slope hazard areas, streams, volcanic hazard areas and wetlands. (Ord. 10870 § 253, 1993).

21A.06.1070 Setback. Setback: The minimum required distance between a structure and a specified line such as a lot, easement or buffer line that is required to remain free of structures. (Ord. 10870 § 254, 1993).

21A.06.1075 Shelters for temporary placement. Shelters for temporary placement: housing units within King County that provide housing to persons on a temporary basis for a duration not to exceed four weeks. (Ord. 10870 § 255, 1993).

21A.06.1080 Shooting range. Shooting range: a facility designed to provide a confined space for safe target practice with firearms, archery equipment, or other weapons. (Ord. 10870 § 256, 1993).

21A.06.1085 Sign. Sign: any device, structure, fixture, or placard that is visible from a public right-of-way or surrounding properties and uses graphics, symbols, or written copy for the purpose of advertising or identifying any establishment, product, goods, or service. (Ord. 10870 § 257, 1993).

21A.06.1090 Sign, awning. Sign, awning: A sign painted on or attached directly to and supported by an awning. An awning may be constructed of rigid or non-rigid materials and may be retractable or non-retractable. (Ord. 13014 § 1, 1998: Ord. 10870 § 258, 1993).

21A.06.1095 Sign, changing message center. Sign, changing message center: an electrically controlled sign that contains advertising messages which changes at intervals of three minutes or greater. (Ord. 10870 § 259, 1993).

21A.06.1100 Sign, community bulletin board. Sign, community bulletin board: a permanent sign used to notify the public of community events and public services, and which contains no commercial advertising. (Ord. 10870 § 260, 1993).

21A.06.1105 Sign, directional. Sign, directional: a sign designed to guide or direct pedestrian or vehicular traffic to an area, place or convenience, and may include incidental graphics such as trade names and trademarks. (Ord. 10870 § 261, 1993).

21A.06.1110 Sign, freestanding. Sign, freestanding: a sign standing directly upon the ground or having one or more supports standing directly upon the ground, and being detached from any building or fence. (Ord. 10870 § 262, 1993).

21A.06.1115 Sign, fuel price. Sign, fuel price: a sign utilized to advertise the price of gasoline and/or diesel fuel. (Ord. 10870 § 263, 1993).

21A.06.1120 Sign, incidental. Sign, incidental: a sign, emblem or decal designed to inform the public of goods, facilities, or services available on the premises, and may include but not limited to signs designating:

A. Restrooms;
B. Hours of operation;
C. Acceptable credit cards;
D. Property ownership or management;
E. Phone booths; and
F. Recycling containers. (Ord. 10870 § 264, 1993).

21A.06.1125 Sign, indirectly illuminated. Sign, indirectly illuminated: a sign that is illuminated entirely from an external artificial source. (Ord. 10870 § 265, 1993).

21A.06.1130 Sign, monument. Sign, monument: a freestanding sign that is above ground level and is anchored to the ground by a solid base, with no open space between the sign and the ground. (Ord. 10870 § 266, 1993).

21A.06.1135 Sign, off-premise directional. Sign, off-premise directional: a sign which contains no advertising of a commercial nature which is used to direct pedestrian or vehicular traffic circulation to a facility, service or business located on other premises within six hundred and sixty feet of the sign. (Ord. 10870 § 267, 1993).

21A.06.1140 Sign, on-premise. Sign, on-premise: a sign which displays a message which is incidental to and directly associated with the use of the property on which it is located. (Ord. 10870 § 268, 1993).

21A.06.1145 Sign, permanent residential development identification. Sign, permanent residential development identification: a permanent sign identifying the residential development upon which the sign is located. (Ord. 10870 § 269, 1993).

21A.06.1150 Sign, portable. Sign, portable: a sign which is capable of being moved and is not permanently affixed to the ground, a structure or building. (Ord. 10870 § 270, 1993).

21A.06.1155 Sign, projecting. Sign, projecting: any sign which is attached to and supported by the exterior wall of a building with the exposed face of the sign on a plane perpendicular to the wall of the building; projecting more than one foot from the wall of a building and vertical to the ground. (Ord. 13014 § 2, 1998; Ord. 10870 § 271, 1993).

21A.06.1160 Sign, time and temperature. Sign, time and temperature: an electrically controlled sign that contains messages for date, time, and temperature, which changes at intervals of one minute or less. (Ord. 10870 § 272, 1993).

21A.06.1165 Sign, wall. Sign, wall: any sign painted on, or attached directly to and supported by a building or structure; with the exposed face of the sign on a plane parallel to the portion of the building or structure to which it is attached; projecting no more than one foot from the building or structure; including window signs which are permanently attached. (Ord. 13014 § 3, 1998; Ord. 10870 § 273, 1993).

21A.06.1170 Site. A single lot, or two or more contiguous lots that are under common ownership or documented legal control, used as a single parcel for a development proposal in order to calculate compliance with the standards and regulations of this title. (Ord. 11922 § 2, 1995).

21A.06.1172 Site area. Site area shall be to the total horizontal area of a project site, less the following:

A. Areas below the ordinary high water mark; and

B. Areas which are required to be dedicated on the perimeter of a project site for public rights-of-way. (Ord. 11555 § 1, 1994).

21A.06.1175 Site cost per student. Site cost per student: the estimated cost of a site in the district for the grade span of school to be provided, as a function of the district's facilities standard per grade span and taking into account the requirements of students with special needs. (Ord. 10870 § 275, 1993).

21A.06.1177 SITUS file. SITUS file: information on an individual parcel of land, including its size, known extent of existing development, known environmental constraints, approval conditions and other site-specific information, contained in the computerized permitting and land

parcel data base of the department of development and environmental services or its successor agencies. (Ord. 11621 § 28, 1994).

21A.06.1180 Ski area. Ski area: an establishment for cross-country or downhill ski runs and including, but not limited to:

A. Chair lifts;
B. Warming huts; and
C. Supporting services. (Ord. 10870 § 276, 1993).

21A.06.1185 Soil recycling facility. Soil recycling facility: an establishment engaged in the collection, storage and treatment of contaminated soils to remove and reuse organic contaminants. (Ord. 10870 § 277, 1993).

21A.06.1190 Source-separated organic material. Source-separated organic material: vegetative material, scrap lumber or wood, or other materials that provide a source for recycled or composted products. This does not include chemically treated wood products and/or toxic organic substances. (Ord. 10870 § 278, 1993).

21A.06.1195 Special use permit. Special use permit: a permit granted by the County to locate a regional land use at a particular location, subject to conditions placed on the proposed use to ensure compatibility with adjacent land uses. (Ord. 10870 § 279, 1993).

21A.06.1200 Specialized instruction school. Specialized instruction school: establishments engaged in providing specialized instruction in a designated field of study, rather than a full range of courses in unrelated areas; including, but not limited to:

A. Art;
B. Dance;
C. Music;
D. Cooking;
E. Driving; and
F. Pet obedience training. (Ord. 10870 § 280, 1993).

21A.06.1205 Specified sexual activities. Specified sexual activities: human genitalia in a state of sexual stimulation or arousal; acts of human masturbation, sexual intercourse or sodomy; or erotic fondling, touching or display of human genitalia, pubic region, buttock, or female breast. (Ord. 10870 § 281, 1993).

21A.06.1210 Sporting goods store. Sporting goods store: An establishment engaged in the retail sale of sporting goods and equipment, including only uses located in SIC Industry Nos.:

A. 5941-Sporting Goods Stores and Bicycle Shops; and
B. 5999-Tent Shops and Trophy Shops. (Ord. 10870 § 282, 1993).

21A.06.1215 Sports club. Sports club: an establishment engaged in operating physical fitness facilities and sports and recreation clubs, including only uses located in SIC Industry Nos.:

A. 7991-Physical Fitness Facilities; and
B. 7997-Membership Sports and Recreation Clubs. (Ord. 10870 § 283, 1993).

21A.06.1220 Stable. Stable: a structure or facility in which horses or other livestock are kept for:

A. Boarding;
B. Training;
C. Riding lessons;
D. Breeding;

E. Rental; or
F. Personal use. (Ord. 10870 § 284, 1993).

21A.06.1225 Standard of service, school districts. Standard of service, school districts: the standard adopted by each school district which identifies the program year, the class size by grade span and taking into account the requirements of students with special needs, the number of classrooms, the types of facilities the district believes will best serve its student population, and other factors as identified by the school district. The district's standard of service shall not be adjusted for any portion of the classrooms housed in relocatable facilities which are used as transitional facilities or for any specialized facilities housed in relocatable facilities. Except as otherwise defined by the school board pursuant to a board resolution, transitional facilities shall mean those facilities that are used to cover the time required for the construction of permanent facilities; provided that, the "necessary financial commitments" as defined in Section 21A.28 are in place to complete the permanent facilities called for in the capital plan. (Ord. 10870 § 285, 1993).

21A.06.1230 Steep slope hazard areas. Steep slope hazard areas: those areas in King County on slopes 40% or steeper within a vertical elevation change of at least ten feet. A slope is delineated by establishing its toe and top and is measured by averaging the inclination over at least ten feet of vertical relief. For the purpose of this definition:

A. The toe of a slope is a distinct topographic break in slope which separates slopes inclined at less than 40% from slopes 40% or steeper. Where no distinct break exists, the toe of a steep slope is the lower most limit of the area where the ground surface drops ten feet or more vertically within a horizontal distance of 25 feet; and

B. The top of a slope is a distinct, topographic break in slope which separates slopes inclined at less than 40% from slopes 40% or steeper. Where no distinct break exists, the top of a steep slope is the upper most limit of the area where the ground surface drops ten feet or more vertically within a horizontal distance of 25 feet. (Ord. 10870 § 286, 1993).

21A.06.1235 Stream functions. Stream functions: natural processes performed by streams including functions which are important in facilitating food chain production, providing habitat for nesting, rearing and resting sites for aquatic, terrestrial and avian species, maintaining the availability and quality of water, such as purifying water, acting as recharge and discharge areas for groundwater aquifers, moderating surface and storm water flows and maintaining the free flowing conveyance of water, sediments and other organic matter. (Ord. 10870 § 287, 1993).

21A.06.1240 Streams. Streams: those areas in King County where surface waters produce a defined channel or bed, not including irrigation ditches, canals, storm or surface water run-off devices or other entirely artificial watercourses, unless they are used by salmonids or are used to convey streams naturally occurring prior to construction in such watercourses. For the purpose of this definition, a defined channel or bed is an area which demonstrates clear evidence of the passage of water and includes, but is not limited to, bedrock channels, gravel beds, sand and silt beds and defined-channel swales. The channel or bed need not contain water year-round. For the purpose of defining the following categories of streams, normal rainfall is rainfall that is at or near the mean of the accumulated annual rainfall record, based upon the water year for King County as recorded at the Seattle-Tacoma International Airport:

A. Class 1 streams, only including streams inventoried as "Shorelines of the State" under King County's Shoreline Master Program, K.C.C. Title 25, pursuant to RCW 90.58;

B. Class 2 streams, only including streams smaller than class 1 streams which flow year-round during years of normal rainfall or those which are used by salmonids; and

C. Class 3 streams, only including streams which are intermittent or ephemeral during years of normal rainfall and which are not used by salmonids. (Ord. 10870 § 288, 1993).

21A.06.1245 Street. Street: a public or recorded private thoroughfare providing pedestrian and vehicular access through neighborhoods and communities and to abutting property. (Ord. 10870 § 289, 1993).

21A.06.1250 Street frontage. Street frontage: any portion of a lot or combination of lots which directly abut a public right-of-way. (Ord. 10870 § 290, 1993).

21A.06.1255 Structure. Structure: anything permanently constructed in or on the ground, or over the water; excluding fences six feet or less in height, decks less than 18 inches above grade, paved areas, and structural or non-structural fill. (Ord. 12987 § 3, 1998; Ord. 10870 § 291, 1993).

21A.06.1260 Student factor. Student factor: the number derived by a school district to describe how many students of each grade span are expected to be generated by a dwelling unit. Student factors shall be based on district records of average actual student generated rates for new developments constructed over a period of not more than five years prior to the date of the fee calculation; if such information is not available in the district, data from adjacent districts, districts with similar demographics, or county wide averages must be used. Student factors must be separately determined for single family and multifamily dwelling units, and for grade spans. (Ord. 10870 § 292, 1993).

21A.06.1265 Submerged land. Submerged land: any land at or below the ordinary high water mark. (Ord. 10870 § 293, 1993).

21A.06.1270 Substantial improvement. Substantial improvement: any maintenance, repair, structural modification, addition or other improvement of a structure, the cost of which equals or exceeds 50 percent of the market value of the structure either before the maintenance, repair, modification or addition is started or before the damage occurred, if the structure has been damaged and is being restored. (Ord. 10870 § 294, 1993).

21A.06.1275 Temporary use permit. Temporary use permit: permit to allow a use of limited duration and/or frequency, or to allow multiple related events over a specified period. (Ord. 10870 § 295, 1993).

21A.06.1277 Theater. Theater: an establishment primarily engaged in the indoor exhibition of motion pictures or of live theatrical presentations. (Ord. 13022 § 5, 1998).

21A.06.1278 Theatrical production services. Theatrical production services: an establishment engaged in uses located in SIC Industry No. 792 - Theatrical Producers (except motion picture), bands, orchestras, and entertainers, except establishments primarily engaged in providing live theatrical presentations, such as road companies and summer theaters. (Ord. 13022 § 6, 1998).

21A.06.1280 Tightline sewer. Tightline sewer: a sewer trunk line designed and intended specifically to serve only a particular facility or place, and whose pipe diameter should be sized appropriately to ensure service only to that facility or place. It may occur outside the local service area for sewers, but does not amend the local service area. (Ord. 10870 § 296, 1993).

21A.06.1285 Trails. Trails: man-made pathways designed and intended for use by pedestrians, bicyclists, equestrians, and/or recreational users. (Ord. 10870 § 297, 1993).

21A.06.1290 Transfer station. Transfer station: a staffed collection and transportation facility used by private individuals and route collection vehicles to deposit solid waste collected off-

site into larger transfer vehicles for transport to permanent disposal sites; and may also include recycling facilities involving collection or processing for shipment. (Ord. 10870 § 298, 1993).

21A.06.1295 Transit base. Transit base: an establishment for the storage, dispatch, repair and maintenance of coaches, light rail trains, and other vehicles of a public transit system. (Ord. 10870 § 299, 1993).

21A.06.1305 Transitional housing facilities. Transitional housing facilities: housing units within King County owned by public housing authorities, nonprofit organizations or other public interest groups that provide housing to persons on a temporary basis for a duration not to exceed 24 months in conjunction with job training, self sufficiency training, and human services counseling; the purpose of which is to help persons make the transition from homelessness to placement in permanent housing. (Ord. 10870 § 301, 1993).

21A.06.1310 Transmission equipment. Transmission equipment: equipment, such as antennae and satellite, or point-to-point microwave dishes, that transmit or receive radio signals. (Ord. 10870 § 302, 1993).

21A.06.1315 Transmission line booster station. Transmission line booster station: an establishment containing equipment designed to increase voltage of electrical power transported through transmission and/or distribution lines to compensate for power loss due to resistance. (Ord. 10870 § 303, 1993).

21A.06.1320 Transmission support structure. Transmission support structure: a pole or lattice-work structure specifically designed and intended to support antenna and related communication equipment. The term does not include poles or lattice-work towers supporting above-ground distribution or transmission lines for utility services such as electric, telephone, cable, etc. (Ord. 13129 § 19, 1998: Ord. 10870 § 304, 1993).

21A.06.1325 Transmitter building. Transmitter building: building used to contain communication transmission equipment. (Ord. 10870 § 305, 1993).

21A.06.1330 Transportation system management ("TSM"). Transportation System Management ("TSM"): Low-cost projects that can be implemented in a short time frame designed to increase the efficiency of existing transportation facilities. This also includes transit and/or ride sharing measures to decrease single occupancy vehicle trips. (Ord. 10870 § 306, 1993).

21A.06.1332 Trough subsidence. Trough subsidence: a readily predictable or historically observed surface depression phenomena caused by coal extraction which is generally characterized by a gentle and continuous dish shape which may extend beyond the subsurface area in which coal mining has occurred. (Ord. 13319 § 5, 1998).

21A.06.1335 Ultimate roadway section. Ultimate roadway section: A designation by King County that the maximum roadway or intersection capacity has been reached and further right-of-way acquisition and/or improvements are not feasible to increase peak hour vehicle capacity. (Ord. 10870 § 307, 1993).

21A.06.1340 Urban Plan Development (UPD). Urban Plan Development: a site specific project consisting of conceptual site plan(s), development standards, processing and other elements. (Ord. 10870 § 308, 1993).

21A.06.1345 Use. Use: activity or function carried out on an area of land, or in a building or structure located thereon. Any use subordinate or incidental to the primary use on a site is considered an accessory use. (Ord. 10870 § 309, 1993).

21A.06.1350 Utility facility. Utility facility: a facility for the distribution or transmission of services to an area; including, but not limited to:

A. Telephone exchanges;
B. Water pumping or treatment stations;
C. Electrical substations;
D. Water storage reservoirs or tanks;
E. Municipal groundwater well-fields;
F. Regional stormwater management facilities.
G. Natural gas gate stations and limiting stations;
H. Propane, compressed natural gas and liquified natural gas storage tanks serving multiple lots or uses from which fuel is distributed directly to individual users;
I. Sewer lift stations; and
J. Pipes, electrical wires and associated structural supports. (Ord. 10870 § 310, 1993).

21A.06.1352 Vactor waste. "Vactor Waste" means liquid or solid waste material collected from catch basins, retention/detention facilities or drainage pipes. (Ord 12018 § 1, 1995).

21A.06.1353 Vactor waste receiving facility. "Vactor Waste Receiving Facility" means a facility where vactor waste is brought for treatment and storage prior to final disposal. (Ord. 12018 § 2, 1995).

21A.06.1355 Variance. Variance: an adjustment in the application of standards of a zoning code to a particular property. (Ord. 10870 § 311, 1993).

21A.06.1360 Vegetation. Vegetation: any and all plant life growing at, below or above the soil surface. (Ord. 10870 § 312, 1993).

21A.06.1365 Vocational school. Vocational school: establishments offering training in a skill or trade to be pursued as a career, including only uses located in SIC Industry Group No.:

A. 824-Vocational Schools; and
B. 8222-Technical Institutes. (Ord. 10870 § 313, 1993).

21A.06.1370 Volcanic hazard areas. Volcanic hazard areas: those areas in King County subject to inundation by mudflows, lahars or related flooding resulting from volcanic activity on Mount Rainier, delineated based on recurrence of an event equal in magnitude to the prehistoric Electron Mudflow. (Ord. 10870 § 314, 1993).

21A.06.1375 Warehousing and wholesale trade. Warehousing and wholesale trade: establishments involved in the storage and/or sale of bulk goods for resale or assembly, excluding establishments offering the sale of bulk goods to the general public which is classified as a retail use in K.C.C. 21A.08.070. These establishments shall include only SIC Major Group Nos. 50 and 51 and SIC Industry Group Nos. 422 and 423. (Ord. 10870 § 315, 1993).

21A.06.1380 Wastewater treatment facility. Wastewater treatment facility: a plant for collection, decontamination and disposal of sewage, including residential, industrial and agricultural liquid wastes, and including any physical improvement within the scope of the definition of "water pollution control facility" set forth in WAC 173-90-015(4) as amended. (Ord. 10870 § 316, 1993).

21A.06.1382 Water budget. Water budget: the upper limit of irrigation water applied to the established landscape area. (Ord. 11210 § 35, 1994).

21A.06.1385 Water dependent use. Water dependent use: a land use which can only exist when the interface between wet meadows, grazed land and water provides the biological or physical conditions necessary for the use. (Ord. 10870 § 317, 1993).

21A.06.1390 Wet meadows, grazed. Wet meadows, grazed: palustrine emergent wetlands typically having up to six inches of standing water during the wet season and dominated under normal conditions by meadow emergents such as reed canary grass, spike rushes, bulrushes, sedges and rushes. During the growing season, the soil is often saturated but not covered with water. These meadows have been frequently used for livestock activities. (Ord. 10870 § 318, 1993).

21A.06.1395 Wetland edge. Wetland edge: the line delineating the outer edge of a wetland, consistent with the 1987 US Army Corps of Engineers Wetlands Delineation Manual in use on January 1, 1995 by the United States Army Corps of Engineers and the United States Environmental Protection Agency as implemented through, and consistent with the May 23, 1994 "Washington Regional Guidance on the 1987 Wetland Delineation Manual" document issued by the Corps of Engineers and the Environmental Protection Agency. When the State of Washington, Department of Ecology, adopts a manual as required pursuant to new section 11 of Engrossed Senate Bill 5776, wetlands regulated under development regulations shall be delineated pursuant to said manual. (Ord. 11977 § 1, 1995: Ord. 10870 § 319, 1993).

21A.06.1400 Wetland, forested. Wetland, forested: a wetland which is characterized by woody vegetation at least 20 feet tall. (Ord. 10870 § 320, 1993).

21A.06.1405 Wetland functions. Wetland functions: natural processes performed by wetlands including functions which are important in facilitating food chain production, providing habitat for nesting, rearing and resting sites for aquatic, terrestrial and avian species, maintaining the availability and quality of water, acting as recharge and discharge areas for groundwater aquifers and moderating surface and storm water flows, as well as performing other functions including, but not limited to, those set forth in 33 CFR 320.4(b)(2), 1988. (Ord. 10870 § 321, 1993).

21A.06.1410 Wetland, isolated. Wetland, isolated: a wetland which has a total size less than 2500 square feet excluding buffers or, if within the Urban Area is less than 5000 square feet excluding buffers, which is hydrologically isolated from other wetlands or streams does not have permanent open water, and is determined to be of low function. (Ord. 11621 § 33, 1994: Ord. 10870 § 322, 1993).

21A.06.1415 Wetlands. Wetlands: those areas in King County which are inundated or saturated by ground or surface water at a frequency and duration sufficient to support, and under normal circumstances do support, a prevalence of vegetation typically adapted for life in saturated soil conditions. Wetlands generally include swamps, marshes, bogs and similar areas, or other artificial features intentionally created to mitigate conversions of wetlands pursuant to wetlands mitigation banking. Wetlands do not include artificial features created from non-wetland areas including, but not limited to irrigation and drainage ditches, grass-lined swales, canals, detention facilities, wastewater treatment facilities, farm ponds and landscape amenities, or those wetlands created after July 1, 1990, that were unintentionally created as a result of the construction of a road, street, or highway. Where the vegetation has been removed or substantially altered, a wetland shall be determined by the presence or evidence of hydric or organic soil, as well as by other documentation, such as aerial photographs, of the previous existence of wetland vegetation.

When the areas of any wetlands are hydrologically connected to each other, they shall be added together to determine which of the following categories of wetlands apply:

A. Class 1 wetlands, only including wetlands assigned the Unique/Outstanding #1 rating in the 1983 King County Wetlands Inventory or which meet any of the following criteria:

1. are wetlands which have present species listed by the federal or state government as endangered or threatened or outstanding actual habitat for those species;

2. are wetlands which have 40% to 60% permanent open water in dispersed patches with two or more classes of vegetation;

3. are wetlands equal to or greater than ten acres in size and have three or more classes of vegetation, one of which is submerged vegetation in permanent open water; or

4. are wetlands which have present plant associations of infrequent occurrence;

B. Class 2 wetlands, only including wetlands assigned the Significant #2 rating in the 1983 King County Wetlands Inventory or which meet any of the following criteria:

1. are wetlands greater than one acre in size;

2. are wetlands equal to or less than one acre in size and have three or more classes of vegetation;

3. are wetlands which:

a. are located within an area designated "urban" in the King County Comprehensive Plan;

b. are equal to or less than one acre but larger than 2,500 square feet; and

c. have three or more classes of vegetation;

4. are forested wetlands equal to or less than one acre but larger than 2500 square feet; or

5. are wetlands which have present heron rookeries or raptor nesting trees; and

C. Class 3 wetlands, only including wetlands assigned the Lesser Concern #3 rating in the 1983 King County Wetlands Inventory or which meet any of the following criteria:

1. are wetlands equal to or less than one acre in size and have two or fewer classes of vegetation; or

2. are wetlands which:

a. are located within an area designated "urban" in the King County Comprehensive Plan;

b. are equal to or less than one acre but larger than 2,500 square feet; and

c. have two or fewer classes of vegetation. (Ord. 12122 § 1, 1996: Ord. 11621 § 34, 1994: Ord. 10870 § 323, 1993).

21A.06.1420 Wetpond. Wetpond: an artificial water body constructed as a part of a surface water management system. (Ord. 10870 § 324, 1993).

21A.06.1425 Wildlife shelter. Wildlife shelter: A facility for the temporary housing of sick, wounded or displaced wildlife. (Ord. 10870 § 325, 1993).

21A.06.1430 Work release facility. Work release facility: a facility which allows the opportunity for convicted persons to be employed outside of the facility, but requires confinement within the facility when not in the place of employment. (Ord. 10870 § 326, 1993).

21A.06.1432 Wrecked, dismantled or inoperative vehicle. "Wrecked, dismantled or inoperative vehicle" means a motor vehicle or the remains or remnant parts of a motor vehicle which is mechanically inoperative and cannot be made operative without the addition of vital parts or mechanisms or the application of a substantial amount of labor and is certified by the department of development and environmental services as meeting at least three of the following requirements:

A. is three years old or older;

B. is extensively damaged, such damage including but not limited to any of the following: missing wheels, tires, motor, or transmission;

C. is apparently inoperable;

D. has an approximate fair market value equal only to the approximate value of the scrap in it. (Ord. 12024 § 11, 1995).

21A.06.1435 Yard or organic waste processing facility. Yard or organic waste processing facility: a site where yard and garden wastes, including wood and landclearing debris, are processed into new products such as soil amendments and wood chips. (Ord. 11157 § 10, 1993: Ord. 10870 § 327, 1993).

21A.06.1440 Zoo animal breeding facility. Zoo animal breeding facility means a non-profit farm which is owned by an American Zoo and Aquarium Association (AZA) accredited zoo, is accredited by the AZA and is operated in conformance with all licensing requirements of the United States Department of Agriculture for the purposes of long term species survival, propagation, conservation, research, and husbandry of native and exotic wildlife and for training zoo professionals, biologists, veterinarians and other zoo-related researchers. (Ord. 12709 § 3, 1997).

Chapter 21A.08
PERMITTED USES

Sections:

21A.08.010 Establishment of uses.
21A.08.020 Interpretation of land use tables.
21A.08.030 Residential land uses.
21A.08.040 Recreational/cultural land uses.
21A.08.050 General services land uses.
21A.08.060 Government/business service land uses.
21A.08.070 Retail land uses.
21A.08.080 Manufacturing land uses.
21A.08.090 Resource land uses.
21A.08.100 Regional land uses.

21A.08.010 Establishment of uses. The use of a property is defined by the activity for which the building or lot is intended, designed, arranged, occupied, or maintained. The use is considered permanently established when that use will or has been in continuous operation for a period exceeding sixty days. A use which will operate for less than sixty days is considered a temporary use, and subject to the requirements of ISDC 21A.32 of this title. All applicable requirements of this code, or other applicable state or federal requirements, shall govern a use located in the City of Sammamish.

21A.08.020 Interpretation of land use tables. A. The land use tables in this chapter determine whether a specific use is allowed in a zone district. The zone district is located on the vertical column and the specific use is located on the horizontal row of these tables.

B. If no symbol appears in the box at the intersection of the column and the row, the use is not allowed in that district, except for certain temporary uses.

C. If the letter "P" appears in the box at the intersection of the column and the row, the use is allowed in that district subject to the review procedures specified in ISDC 21A.42 and the general requirements of the code.

D. If the letter "C" appears in the box at the intersection of the column and the row, the use is allowed subject to the conditional use review procedures specified in ISDC 21A.42 and the general requirements of the code.

E. If the letter "S" appears in the box at the intersection of the column and the row, the regional use is permitted subject to the special use permit review procedures specified in ISDC 21A.42 and the general requirements of the code.

F. If a number appears in the box at the intersection of the column and the row, the use may be allowed subject to the appropriate review process indicated above, the general requirements of the code and the specific conditions indicated in the development condition with the corresponding number immediately following the land use table.

G. If more than one letter-number combination appears in the box at the intersection of the column and the row, the use is allowed in that zone subject to different sets of limitation or conditions depending on the review process indicated by the letter, the general requirements of the code and the specific conditions indicated in the development condition with the corresponding number immediately following the table.

H. All applicable requirements shall govern a use whether or not they are cross-referenced in a section.

21A.08.030 A. Residential land uses.

KEY
P-Permitted Use
C-Conditional Use
S-Special Use

	ZONE				RESIDENTIAL								
							URBAN	RESIDENTIAL	NEIGHBORHOOD	BUSINESS	COMMUNITY	BUSINESS	OFFICE
SIC #	SPECIFIC LAND USE						R1-8	R12	NB	CB		O	
	DWELLING UNITS, TYPES:												
*	Single detached						P C13	P C13					
*	Townhouse						P 12 C	P	P3	P3		P3	
*	Apartment						P5 C4	P	P3	P3		P3	
*	Mobile home park						C8	P					
	GROUP RESIDENCES:												
*	Community residential facility-I						C	P	P3	P3		P3	
*	Community residential facility-II					P	P	P	P3	P3		P3	
*	Dormitory						C6	P					
*	Senior citizen assisted housing							P	P3	P3		P3	
	ACCESSORY USES:												
*	Residential accessory uses						P7	P7	P7	P7		P7	
*	Home occupation						P	P	P	P		P	
*	Home industry						C						
	TEMPORARY LODGING:												
7011	Hotel/motel (1)									P		P	
*	Bed and breakfast guesthouse						P10	P10	P10	P11			
7041	Organization hotel/lodging houses												

B. Development conditions.

1. Except bed and breakfast guesthouses.

2. Not Used.

3. Only as part of a mixed use development subject to the conditions of ISDC 21A.14, except that in the NB zone on properties with a land use designation of commercial outside of center (CO) in the urban areas, stand-alone townhouse developments are permitted subject to the provisions of ISDC 21A.12.040, ISDC 21A.14.030, ISDC 21A.14.060 and ISDC 21A.14.180.

4. Only in a building listed on the National Register as an historic site or designated as a landmark subject to the provisions of ISDC 21A.32.

5. Only subject to the residential density incentive provisions of ISDC 21A.34.

6. Only as an accessory to a school, college/university or church.

7. a. Accessory dwelling units:

(1) Only one accessory dwelling per primary single detached dwelling unit;

(2) Only in the same building as the primary dwelling unit when the lot is less than 10,000 square feet in area or when there is more than one primary dwelling on a lot;

(3) The primary dwelling unit or the accessory dwelling unit shall be owner occupied;

(a.) One of the dwelling units shall not exceed a floor area of 1,000 square feet except when one of the dwelling units is wholly contained within a basement or attic, and

(b.) When the primary and accessory dwelling units are located in the same building, only one entrance may be located on each street side of the building;

(5) One additional off-street parking space shall be provided;

(6) The accessory dwelling unit shall be converted to another permitted use or shall be removed if one of the dwelling units ceases to be owner occupied; and

(7) An applicant seeking to build an accessory dwelling unit shall file a notice approved by the Department with the records and elections division which identifies the dwelling unit as accessory. The notice shall run with the land. The applicant shall submit proof that the notice was filed before the Department shall approve any permit for the construction of the accessory dwelling unit. The required contents and form of the notice shall be set forth in administrative rules.

b. One single or twin engine, noncommercial aircraft shall be permitted only on lots which abut, or have a legal access which is not a county right-of-way, to a waterbody or landing field, provided:

(1) No aircraft sales, service, repair, charter or rental; and

(2) No storage of aviation fuel except that contained in the tank or tanks of the aircraft.

8. Mobile home parks shall not be permitted in the R-1 zones.

9. Not Used.

10. Only as an accessory to the permanent residence of the operator, provided:

a. Serving meals to paying guests shall be limited to breakfast; and

b. The number of persons accommodated per night shall not exceed five, except that a structure which satisfies the standards of the Uniform Building Code as adopted by King County for R-1 occupancies may accommodate up to ten persons per night.

11. Only when part of a mixed use development, and subject to the conditions of ISDC 21A.08.030B.10.

12. A conditional use permit is not required for townhouse units on lots in a subdivision designed for townhouse units.

13. Required prior to approving more than one dwelling on individual lots, except on lots in subdivisions, short subdivisions, or binding site plans approved for multiple unit lots, and except as provided for accessory dwelling units in ISDC 21A.08.030B7.

14. Not Used.

21A.08.040 A. Recreational/cultural land uses.

KEY
P-Permitted Use
C-Conditional Use
S-Special Use

SIC#	SPECIFIC LAND USE	ZONE				RESIDENTIAL			COMMERCIAL/INDUSTRIAL				
							URBAN	RESIDENTIAL	NEIGHBORHOOD	BUSINESS	COMMUNITY	BUSINESS	OFFICE	I
							R1-8	R12-	NB	CB		O	
	PARK/RECREATION:												
*	Park						P1	P1	P	P		P	
*	Trails						P	P	P	P		P	
*	Marina						C4	C4	P5	P		P	
*	Sports club (17)						C4	C4	C	P			
	AMUSEMENT/ENTERTAINMENT:												
*	Theater									P6		P6	
7833	Theater, Drive-in												
793	Bowling center									P			
*	Golf facility						P7	P7					
7999 (14)	Amusement and recreation Services						P8 C15	P8 C15		P			
*	Amusement arcades									P			
	CULTURAL:												
823	Library						P11 C	P11 C	P	P		P	
841	Museum						P11 C	P11 C	P	P		P	
842	Arboretum						P	P	P	P		P	
*	Conference Center						P11 C	P11 C	P			P	

Recreational/cultural land uses.

B. Development conditions.

1. The following conditions and limitations shall apply, where appropriate:

a. No stadiums on sites less than ten acres;

b. Lighting for structures and fields shall be directed away from residential areas;

c. Structures or service yards shall maintain a minimum distance of fifty feet from property lines adjoining residential zones, except for structures in on-site recreation areas required in 21A.14.180 and 21A.14.190. Setback requirements for structures in these on-site required recreation areas shall be maintained pursuant to ISDC 21A.12.030;

d. Not Used.

2. Not Used.

3. Limited to day moorage. The marina shall not create a need for off-site public services beyond those already available prior to date of application.

4. Limited to recreation facilities subject to the following conditions and limitations:

a. The bulk and scale shall be compatible with residential or rural character of the area;

b. For sports clubs, the gross floor area shall not exceed 10,000 square feet unless the building is on the same site or adjacent to a site where a public facility is located or unless the building is a non-profit facility located in the urban area; and

c. Use is limited to residents of a specified residential development or to sports clubs providing supervised instructional or athletic programs.

5. Limited to day moorage.

6. Adult use facilities shall be prohibited within 660 feet of any residential zones, any other adult use facility, or school licensed daycare centers, parks, community centers, public libraries or churches which conduct religious or educational classes for minors.

7. Clubhouses, maintenance buildings and equipment storage areas, and driving range tees shall be at least 50 feet from residential property lines. Lighting for practice greens and driving range ball impact areas shall be directed away from adjoining residential zones.

8. Limited to a golf driving range as an accessory to golf courses.

9.aNot Used,

10.a. Not Used.

11. Only as accessory to a park or in a building listed on the National Register as an historic site or designated as a landmark subject to the provisions of ISDC 21A.32.

12. Not Used.

13. Not Used.

14. Not Used.

15. Not Used.

16. Not Used.
17. Only for stand-alone sports clubs that are not part of a park.

21A.08.050 A. General Services land uses.

KEY
P-Permitted Use
C-Conditional Use
S-Special Use

	ZONE				RURAL	RESIDENTIAL		COMMERCIAL/INDUSTRIAL				
						URBAN RESIDENTIAL		NEIGHBORHOOD BUSINESS	COMMUNITY BUSINESS		OFFICE	
SIC#	SPECIFIC LAND USE					R1-8	R12-	NB	CB		O	
	PERSONAL SERVICES:											
72	General Personal Service					C 26	C 26	P	P		P3	
7216	Drycleaning plants											P
7261	Funeral Home/Crematory					C4	C4		P			
*	Cemetery, Columbarium or Mausoleum					P25 C5	P25 C5	P25	P25		P25	
	Day care I					P6	P	P	P		P7	
*	Day care II					P8 C	P8 C	P	P		P7	
074	Veterinary Clinic							P10	P10			
753	Automotive repair (1)							P11	P			
754	Automotive service							P11	P			
76	Miscellaneous repair								P			
866	Churches, synagogue, temple					P12 C	P12 C	P	P		P	
83	Social Services (2)					P12 C13	P12 C13	P13	P		P	
*	Stable					P 14 C						
*	Kennel or Cattery								C			
*	Theatrical Production Services								P31			
*	Artist Studios					P29	P29	P	P		P30	
*	Interim Recycling Facility					P 22	P 22	P 23	P 23			
	HEALTH SERVICES:											
801-04	Office/Outpatient Clinic					P12 C 13	P12 C 13	P	P		P	
805	Nursing and personal care facilities						C		P			
806	Hospital					C13	C13		P		C	
807	Medical/Dental Lab								P		P	
808-09	Miscellaneous Health								P		P	
	EDUCATION SERVICES:											
*	Elementary School					P	P					
*	Middle/Junior High School					P	P					
*	Secondary or High School					P27	P27		C			
	Vocational School					P13 C	P13 C				P17	

*	Specialized Instruction School						P19 C20	P19 C20	P	P		P17	
*	School District Support Facility						P 24 C	P 24 C	C	P		P	

General services land uses.

B. Development conditions.

1. Except SIC Industry No. 7534 - Tire Retreading, see manufacturing permitted use table.

2. Except SIC Industry Group Nos.:

a. 835-Day Care Services, and

b. 836-Residential Care, which is otherwise provided for on the residential permitted land use table.

3. Limited to SIC Industry Group and Industry Nos.:

a. 723-Beauty Shops;

b. 724-Barber Shops;

c. 725-Shoe Repair Shops and Shoeshine Parlors;

d. 7212-Garment Pressing and Agents for Laundries and Drycleaners;

e. 217-Carpet and Upholstery Cleaning.

4. Only as an accessory to a cemetery.

5. Structures shall maintain a minimum distance of one hundred feet from property lines adjoining residential zones.

6. Only as an accessory to residential use, provided:

a. Outdoor play areas shall be completely enclosed by a solid wall or fence, with no openings except for gates, and have a minimum height of six feet; and

b. Outdoor play equipment shall maintain a minimum distance of twenty feet from property lines adjoining residential zones.

7. Permitted as an accessory use, see commercial/industrial accessory, ISDC 21A.08.060A.

8. Only as a re-use of a public school facility subject to the provisions of ISDC 21A.32, or an accessory use to a school, church, park, sport club or public housing administered by a public agency, provided:

a. Outdoor play areas shall be completely enclosed by a solid wall or fence, with no openings except for gates and have a minimum height of six feet;

b. Outdoor play equipment shall maintain a minimum distance of twenty feet from property lines adjoining residential zones;

c. Direct access to a developed arterial street shall be required in any residential zone; and

d. Hours of operation may be restricted to assure compatibility with surrounding development.

9. Not Used.

10.a. No burning of refuse or dead animals is allowed;

b. The portion of the building or structure in which animals are kept or treated shall be soundproofed. All run areas, excluding confinement areas for livestock, shall be surrounded by an eight-foot solid wall and surfaced with concrete or other impervious material; and

c. The provisions of ISDC 21A.30 relative to animal keeping are met.

11. The repair work or service shall only be performed in an enclosed building, and no outdoor storage of materials. SIC Industry No. 7532 - Top, Body, and Upholstery Repair Shops and Paint Shops is not allowed.

12. Only as a re-use of a public school facility subject to the provisions of ISDC 21A.32.

13. Only as a re-use of a surplus nonresidential facility subject to ISDC 21A.32.

14. Covered riding arenas are subject to the provisions of ISDC 21A.30.030 and shall not exceed twenty thousand square feet, provided that stabling areas, whether attached or detached, shall not be counted in this calculation.

15. Not Used.

16.a. Not Used.

17. All instruction must be within an enclosed structure.

18. Not Used.

19. Only as an accessory to residential use, provided:

a. Students are limited to twelve per one-hour session,

b. All instruction must be within an enclosed structure, and

c. Structures used for the school shall maintain a distance of twenty-five feet from property lines adjoining residential zones.

20. Subject to the following:

a. Structures used for the school and accessory uses shall maintain a minimum distance of twenty-five feet from property lines adjoining residential zones;

b. On lots over two and one half acres:

(1) Retail sales of items related to the instructional courses is permitted, provided total floor area for retail sales is limited to two thousand square feet;

(2) Sales of food prepared in the instructional courses is permitted, provided total floor area for food sales is limited to one thousand square feet and is located in the same structure as the school; and

(3) Other incidental student-supporting uses are allowed, provided such uses are found to be both compatible with and incidental to the principal use; and

c. On sites over ten acres, and zoned R-1, and/or R-4:

(1) Retail sales of items related to the instructional courses is permitted, provided total floor area for retail sales is limited to two thousand square feet;

(2) Sales of food prepared in the instructional courses is permitted, provided total floor area for food sales is limited to one thousand seven hundred fifty square feet and is located in the same structure as the school;

(3) Other incidental student-supporting uses are allowed, provided such uses are found to be functionally related, subordinate, compatible with and incidental to the principal use;

(4) The use is integrated with allowable agricultural uses on the site;

(5) Advertised special events shall comply with the temporary use requirements of this chapter; and

(6) Existing structures that are damaged or destroyed by fire or natural event, if damaged by more than fifty percent of their prior value, may reconstruct and expand an additional sixty-five percent of the original floor area but need not be approved as a conditional use if their use otherwise complies with the standards set forth in development condition B20c of this section and the requirements of this title.

21. Not Used.

22. Limited to drop box facilities accessory to a public or community use such as a school, fire station or community center.

23. With the exception of drop box facilities for the collection and temporary storage of recyclable materials, all processing and storage of material shall be within enclosed buildings. Yard waste processing is not permitted.

24. Only when adjacent to an existing or proposed school.

25. Limited to columbariums accessory to a church provided that required landscaping and parking are not reduced.

26. Not permitted in R-1 and limited to a maximum of five thousand square feet per establishment and subject to the additional requirements in ISDC 21A.12.230.

27.a. New high schools shall be permitted in urban residential and urban reserve zones subject to the review process set forth in ISDC 21A.42.140 and

b. Renovation, expansion, modernization, or reconstruction of a school, or the addition of relocatable facilities, is permitted.

28. Not Used.

29. Only as a reuse of a surplus non-residential facility subject to ISDC 21A.32 or as a joint use of an existing public school facility.

30. All studio use must be within an enclosed structure.

31. Adult use facilities shall be prohibited within six hundred sixty feet of any residential zones, any other adult use facility, or school licensed daycare centers, parks, community centers, public libraries or churches which conduct religious or educational classes for minors.

21A.08.060 A. Government/business services land uses.

KEY
P-Permitted Use
C-Conditional Use
S-Special Use

SIC#	SPECIFIC LAND USE	ZONE				RESIDENTIAL				COMMERCIAL/INDUSTRIAL				
							URBAN	RESIDENTIAL	NEIGHBORHOOD	BUSINESS	COMMUNITY	BUSINESS	OFFICE	D
							R1-8	R12-	NB		CB		O	
	GOVERNMENT SERVICES:													
*	Public agency or utility office						P3 C	P3 C	P		P		P	
*	Public agency archives												P	
921	Court										P4		P	
9221	Police Facility						P7	P7	P7		P		P	
9224	Fire Facility						C6	C6	P		P		P	
*	Utility Facility						P29 C28	P29 C28	P		P		P	
*	Commuter Parking Lot						C P19	C P19	P		P		P	
*	Private Stormwater Management Facility						P8	P8	P8		P8		P8	
*	Vactor Waste Receiving Facility						P18	P18	P31		P31		P31	
	BUSINESS SERVICES:													
*	Construction and Trade												P9	
*	Individual Transportation and Taxi										P25		P10	
421	Trucking and Courier Service										P11		P13	
*	Self-service Storage							C14			P		P	
473	Freight and Cargo Service												P	
472	Passenger Transportation Service										P		P	

21A.08.060 A. Government/business services land uses (continued)

KEY
P-Permitted Use
C-Conditional Use
S-Special Use

	ZONE				RESIDENTIAL				COMMERCIAL/INDUSTRIAL				
							URBAN RESIDENTIAL		NEIGHBORHOOD BUSINESS	COMMUNITY BUSINESS		OFFICE	
SIC#	SPECIFIC LAND USE						R1-8	R12-	NB	CB		O	
48	Communication Offices											P	
482	Telegraph and other Communications									P		P	
*	General Business Service								P	P		P	
*	Professional Office								P	P		P	
7312	Outdoor Advertising Service											P17	
735	Miscellaneous Equipment Rental									P17		P17	
751	Automotive Rental and Leasing									P			
752	Automotive Parking								P20	P20		P20	
*	Off-Street Required Parking Lot						P32	P32	P32	P32		P32	
7941	Professional Sport Teams/Promoters											P	
873	Research, Development and Testing											P2	
	ACCESSORY USES:												
*	Commercial/Industrial Accessory Uses								P22	P22		P	
*	Helistop						C23	C23	C23	C23		C23	

Government/business service land uses.

B. Development conditions.

1. Not Used.

2. Except SIC Industry No. 8732-Commercial Economic, Sociological, and Educational Research, see general business service/office.

3.a. Only as a re-use of a public school facility or a surplus nonresidential facility subject to the provisions of ISDC chapter 21A.32; or

b. only when accessory to a fire facility and the office is no greater than one thousand five hundred square feet of floor area.

4. Only as a re-use of a surplus nonresidential facility subject to ISDC chapter 21A.32.

5. Not Used.

6.a. All buildings and structures shall maintain a minimum distance of twenty feet from property lines adjoining residential zones;

b. any buildings from which fire-fighting equipment emerges onto a street shall maintain a distance of thirty-five feet from such street;

c. no outdoor storage; and

d. excluded from the RA-10 and RA-20 zones unless it is demonstrated that no feasible alternative location is possible.

7. Limited to "storefront" police offices. Such offices shall not have:

a. holding cells,

b. suspect interview rooms (except in the NB zone), or

c. long-term storage of stolen properties.

8. Private stormwater management facilities serving development proposals located on commercial/industrial zoned lands shall also be located on commercial/industrial lands, unless participating in an approved shared facility drainage plan. Such facilities serving development within an area designated "urban" in the King County Comprehensive Plan shall only be located in the urban area.

9. No outdoor storage of materials.

10. Limited to office uses.

11. Limited to self-service household moving truck or trailer rental accessory to a gasoline service station.

12. Not Used.

13. Limited to SIC Industry No. 4215-Courier Services, except by air.

14. Accessory to an apartment development of at least twelve units provided:

a. the gross floor area in self service storage shall not exceed the total gross floor area of the apartment dwellings on the site;

b. all outdoor lights shall be deflected, shaded and focused away from all adjoining property;

c. the use of the facility shall be limited to dead storage of household goods;

d. no servicing or repair of motor vehicles, boats, trailers, lawn mowers or similar equipment;

e. no outdoor storage or storage of flammable liquids, highly combustible or explosive materials or hazardous chemicals;

f. no residential occupancy of the storage units;

g. no business activity other than the rental of storage units; and

h. a resident Director shall be required on the site and shall be responsible for maintaining the operation of the facility in conformance with the conditions of approval.

15. Not Used.

16. Not Used.

17. No outdoor storage.

18. Only as an accessory use to a public agency or utility yard, or to a transfer station.

19. Limited to new commuter parking lots designed for thirty or fewer parking spaces or commuter parking lots located on existing parking lots for churches, schools, or other permitted nonresidential uses which have excess capacity available during commuting; provided that the new or existing lot is adjacent to a designated arterial that has been improved to a standard acceptable to the Department of transportation;

20. No tow-in lots for damaged, abandoned or otherwise impounded vehicles.

21. Not Used.

22. Storage limited to accessory storage of commodities sold at retail on the premises or materials used in the fabrication of commodities sold on the premises.

23. Limited to emergency medical evacuation sites in conjunction with police, fire or health service facility. Helistops are prohibited from the UR zone only if the property is located within a designated unincorporated Rural Town.

24. Not Used.

25. Limited to private road ambulance services with no outside storage of vehicles.

26. Limited to two acres or less.

27a. Utility yards only on sites with utility district offices; or

b. Public agency yards are limited to material storage for road maintenance facilities.

28. Limited to bulk gas storage tanks which pipe to individual residences but excluding liquefied natural gas storage tanks.

29. Excluding bulk gas storage tanks.

30. Not Used.

31. Vactor waste treatment, storage and disposal shall be limited to liquid materials. Materials shall be disposed of directly into a sewer system, or shall be stored in tanks (or other covered structures), as well as enclosed buildings.

32. Provided:

a. off-street required parking for a land use located in the urban area must be located in the urban area;

b. off-street required parking for a land use located in the rural area must be located in the rural area; and

c. off-street required parking must be located on a lot which would permit, either outright or through a land use permit approval process, the land use the off-street parking will serve

21A.08.070 A. Retail land uses.

KEY
P-Permitted Use
C-Conditional Use
S-Special Use

	ZONE				RESIDENTIAL				COMMERCIAL/INDUSTRIAL				
							URBAN	RESIDENTIAL	NEIGHBORHOOD	BUSINESS	COMMUNITY	BUSINESS	OFFICE
SIC#	SPECIFIC LAND USE						R1-8	R12-	NB		CB		O
*	Building, Hardware and Garden Materials								P2		P		
*	Department and Variety Stores						C15	C15	P5		P		
54	Food Stores						C16	C16	P		P		C
*	Agricultural Product Sales						P3						
553	Auto Supply Stores										P9		
554	Gasoline Service Stations								P		P		
56	Apparel and Accessory Stores										P		
*	Furniture and Home Furnishings Stores										P		
58	Eating and Drinking Places						C17	C17	P10		P		P
*	Drug Stores						C16	C16	P		P		C
592	Liquor Stores										P		
593	Uses Goods: Antiques/Secondhand Shops										P		
*	Sporting Goods and related Stores										P		
*	Book, Stationery, Video &Art Supply Stores						C16, 11	C16, 11	P11		P11		
*	Jewelry Stores										P		
*	Hobby, Toy, Game Shops								P		P		
*	Photographic and Electronic Shops								P		P		
*	Fabric Shops										P		
598	Fuel Dealers										C12		
*	Florist Shops						C16	C16	P		P		P
*	Personal Medical Supply Stores										P		
*	Pet Shops								P		P		
*	Bulk Retail										P		
*	Livestock Sales						P18, 19						

Retail land uses.

B. Development conditions.

1. Not Used.

2. Only hardware and garden materials stores shall be permitted.

3.a. Except for hay sales, limited to products produced on-site; and

b. Covered sales areas shall not exceed a total area of 500 square feet.

4. Not Used.

5. Limited to SIC Industry No. 5331, Variety Stores, and further limited to a maximum of 2,000 square feet of gross floor area.

6. Not Used.

7.a. Not Used.

8. Not Used.

9. Only the sale of new or reconditioned automobile supplies is permitted.

10. Excluding SIC Industry No. 5813-Drinking Places.

11. Adult use facilities shall be prohibited within 660 feet of any residential zones, any other adult use facility, school, licensed daycare centers, parks, community centers, public libraries, or churches which conduct religious or educational classes for minors.

12. No outside storage of fuel trucks and equipment.

13. Not Used.

14. Not Used.

15. Not in R-1 and limited to SIC Industry No. 5331 - Variety Stores, limited to a maximum of 5,000 square feet of gross floor area, and subject to the requirements in ISDC 21A.12.330.

16. Not permitted in R-1 and limited to a maximum of 5,000 square feet of gross floor area and subject to the requirements in ISDC 21A.12.230.

17. Not permitted in R-1 and excluding SIC Industry No. 5813-Drinking Places, and limited to a maximum of 5,000 square feet of gross floor area and subject to the requirements in ISDC 21A.12.230.

18. Retail sale of livestock is permitted only as accessory to raising livestock.

19. Limited to the R-1 zone.

21A.08.080 A. Manufacturing land uses.

KEY
P-Permitted Use
C-Conditional Use
S-Special Use

SIC#	SPECIFIC LAND USE	ZONE				RESIDENTIAL				COMMERCIAL/INDUSTRIAL				
								URBAN	RESIDENTIAL	NEIGHBORHOOD	BUSINESS	COMMUNITY	BUSINESS	OFFICE
								R1-8	R12-	NB		CB		O
27	Printing and Publishing									P7		P7		P7 C
32	Stone, Clay, Glass and Concrete Products											P8		
357	Computer and Office Equipment													C
38	Measuring and Controlling Instruments													C

Manufacturing land uses.

B. Development conditions.

1. Not Used.
2. Not Used.
3. Not Used.
4. Not Used.
5. Not Used.
6. Not Used.
7. Limited to photocopying and printing services offered to the general public.
8. Only within enclosed buildings, and as an accessory use to retail sales.
9. Not Used.
10. Not Used.
11. Not Used.

21A.08.090 A. Resource land uses.

KEY
P-Permitted Use C-Conditional Use S-Special Use

	ZONE				RESIDENTIAL				COMMERCIAL/INDUSTRIAL				
							URBAN RESIDENTIAL		NEIGHBORHOOD BUSINESS	COMMUNITY BUSINESS		OFFICE	
SIC#	SPECIFIC LAND USE						R1-8	R12-	NB	CB		O	
	AGRICULTURE:												
01	Growing and Harvesting Crops						P						
02	Raising Livestock and Small Animals						P6						
	FORESTRY:												
08	Growing & Harvesting Forest Product						P						
*	Forest Research											P2	
	Fish and Wildlife Management:												
0921	Hatchery/Fish Preserve (1)						C						
0273	Aquaculture (1)						C						
	MINERAL:												

Resource land uses.

B. Development conditions.

1. Not Used.
2. Only forest research conducted within an enclosed building.
3. Not Used.
4. Not Used.
5. Not Used.
6. Large livestock allowed only in the R-1 zone.
7. Not Used.
8. Not Used.
9. Not Used.
10. ;

Not Used.

21A.08.100 A. Regional land uses.

KEY
P-Permitted Use
C-Conditional Use
S-Special Use

	ZONE	RESIDENTIAL							COMMERCIAL/INDUSTRIAL				
							URBAN RESIDENTIAL		NEIGHBORHOOD BUSINESS	COMMUNITY BUSINESS		OFFICE	
SIC#	SPECIFIC LAND USE						R1-8	R12-	NB	CB		O	
*	Jail						S	S	S	S		S	
*	Work Release Facility						S	S	S	S		S	
*	Public Agency Training Facility									S3		S3	
*	Hydroelectric Generation Facility						C14 S						
*	Non-hydroelectric Generation Facility						C12 S	C12 S	C12 S	C12 S		C12 S	
*	Communication Facility (17)						C6c S	C6c S	C6c S	P		P	
*	Earth Station						C6a S	C6a S	P6b C	P		P	
13	Oil and Gas Extraction						S	S	S	S		S	
*	Energy Resource Recovery Facility						S	S	S	S		S	
*	Landfill						S	S	S	S		S	
*	Transfer Station						S	S	S	S			
*	Wastewater Treatment Facility						S	S	S	S		S	
*	Municipal Water Production						S	S	S	S		S	
*	Airport/Heliport						S	S	S	S		S	
*	Transit Bus Base						S	S	S	S		S	
*	School Bus Base						CP5 S	C5 S	S	S		S	
7948	Racetrack						S8	S8	S8	S8		S8	
*	Fairground									S			
8422	Zoo/Wildlife Exhibit (2)						S	S		S			
7941	Stadium/Arena												
8221-8222	College/University (1)						P10 C11 S	P10 C11 S	P10 C11 S	P		P	

B. Development Conditions.

1. Not Used.
2. Not Used.
3. Except weapons armories and outdoor shooting ranges.
4. Except outdoor shooting range.
5. Only in conjunction with an existing or proposed school.
6. a. Limited to no more than three satellite dish antennae.
   b. Limited to one satellite dish antenna.
   c. Limited to tower consolidations.
7. Not Used.
8. Except racing of motorized vehicles.
9. Not Used.
10. Only as a re-use of a public school facility subject to the provisions of ISDC chapter 21A.32.
11. Only as a re-use of a surplus nonresidential facility subject to the provisions of ISDC chapter 21A.32.
12. Limited to cogeneration facilities for on-site use only.
13. Not Used.
14. Limited to facilities that comply with the following provisions:
    a. Any new diversion structure shall not:
       (1) exceed a height of eight feet as measured from the streambed, or
       (2) impound more than three surface acres of water at the normal maximum surface level;
    b. There shall be no active storage;
    c. The maximum water surface area at any existing dam or diversion shall not be increased;
    d. An exceedance flow of no greater than fifty percent in mainstream reach shall be maintained;
    e. Any transmission line shall be limited to a:
       (1) right-of-way of five miles or less; and
       (2) capacity of two hundred thirty KV or less;
    f. Any new, permanent access road shall be limited to five miles or less; and
    g. The facility shall only be located above any portion of the stream used by anadromous fish.
15. Not Used.
16. Not Used.
17. Not Used.

Chapter 21A.12
DEVELOPMENT STANDARDS - DENSITY AND DIMENSIONS

Sections:

21A.12.010	Purpose.
21A.12.020	Interpretation of tables.
21A.12.030	Densities and dimensions - Residential zones.
21A.12.040	Densities and dimensions - Resource and commercial/industrial zones.
21A.12.050	Measurement methods.
21A.12.060	Minimum urban residential density.
21A.12.070	Calculations - Allowable dwelling units or floor area.
21A.12.080	Calculations - Site area used for base density and maximum density floor area calculations.
21A.12.085	Calculations - Site area used for minimum density calculations.
21A.12.087	Minimum density adjustments for moderate slopes.
21A.12.090	Lot area - Prohibited reduction.
21A.12.100	Not Used.
21A.12.110	Measurement of setbacks.
21A.12.120	Setbacks - Specific building or use.
21A.12.122	Setbacks - Livestock buildings and manure storage areas.
21A.12.130	Setbacks - Modifications.
21A.12.140	Setbacks - From regional utility corridors.
21A.12.150	Setbacks - From alley.
21A.12.160	Setbacks - Required modifications.
21A.12.170	Setbacks - Projections and structures allowed.
21A.12.180	Height - Exceptions to limits.
21A.12.190	Not Used.
21A.12.200	Lot divided by zone boundary.
21A.12.210	Sight distance requirements.
21A.12.220	Not Used.
21A.12.230	Personal services and retail uses in R-4 through R-48 zones.

21A.12.010 Purpose. The purpose of this chapter is to establish basic dimensional standards for development relative to residential density and as well as specific rules for general application. The standards and rules are established to provide flexibility in project design, and maintain privacy between adjacent uses.

21A.12.020 Interpretation of tables. A. ISDC 21A.12.030 and 21A.12.040 contain general density and dimension standards for the various zones and limitations specific to a particular zone(s). Additional rules, exceptions, and methodologies are set forth in ISDC 21A.12.050 through 21A.12.210.

B. The density and dimension tables are arranged in a matrix format on two separate tables and are delineated into two general land use categories:

1. Residential; and
2. Resource and Commercial/Industrial.

C. Development standards are listed down the left side of both tables, and the zones are listed at the top. The matrix cells contain the minimum dimensional requirements of the zone. The parenthetical numbers in the matrix identify specific requirements applicable either to a

specific use or zone. A blank box indicates that there are no specific requirements. If more than one standard appears in a cell, each standard will be subject to any applicable parenthetical footnote following the standard.

21A.12.030 A. Densities and dimensions - Residential zones.

	RESIDENTIAL												
ZONES						URBAN RESIDENTIAL							
STANDARDS						R-1 (17)	R-4	R-6	R-8	R-12	R-18		
Base Density: Dwelling Unit/Acre (15)						1 du/ac	4 du/ac (6)	6 du/ac	8 du/ac	12 du/ac	18 du/ac		
Maximum Density: Dwelling Unit/Acre (1)							6 du/ac	9 du/ac	12 du/ac	18 du/ac	27 du/ac		
Minimum Density: (2)							85% (12) (18)	85% (12) (18)	85% (12) (18)	80% (18)	75% (18)		
Minimum Lot Width (3)						35 ft (7)	30 ft	30 ft	30 ft	30 ft	30ft		
Minimum Street Setback (3)						20 ft (7)	10 ft (8)	10 ft (8)	10 ft (8)	10 ft (8)	10 ft (8)		
Minimum Interior Setback (3) (16)						5 ft (7)	5 ft	5 ft	5 ft	5 ft (10)	5 ft (10)		
Base Height (4)						35 ft	35 ft	35 ft 45 ft (14)	35 ft 45 ft (14)	60 ft	60 ft 80 ft (14)		
Maximum Impervious Surface: Percentage (5)						30% (11)	55%	70%	75%	85%	85%		

B. Development conditions.

1. This maximum density may be achieved only through the application of residential density incentives pursuant to ISDC 21A.34 or transfers of density credits pursuant to ISDC

21A.36 or 21A.55, or any combination of density incentive or density transfer. Maximum density may only be exceeded pursuant to ISDC 21A.34.040F.1.f.

2. Also see ISDC 21A.12.060.

3. These standards may be modified under the provisions for zero-lot-line and townhouse developments.

4. Height limits may be increased when portions of the structure which exceed the base height limit provide one additional foot of street and interior setback for each foot above the base height limit, provided the

maximum height may not exceed seventy-five feet. Netting or fencing and support structures for the netting or fencing used to contain golf balls in the operation of golf courses or golf driving ranges are exempt from the additional interior setback requirements provided that the maximum height shall not exceed seventy-five feet.

5. Applies to each individual lot. Impervious surface area standards for:

a. regional uses shall be established at the time of permit review;

b. nonresidential uses in residential zones shall comply with ISDC 21A.12.120 and .220;

c. individual lots in the R-4 through R-6 zones which are less than 9,076 square feet in area shall be subject to the applicable provisions of the nearest comparable R-6 or R-8 zone;

d. lot may be increased beyond the total amount permitted in this chapter subject to approval of a conditional use permit.

6. Mobile home parks shall be allowed a base density of six dwelling units per acre.

7. The standards of the R-4 zone shall apply if a lot is less than 15,000 square feet in area.

8. At least twenty linear feet of driveway shall be provided between any garage, carport or other fenced parking area and the street property line. The linear distance shall be measured along the center line of the driveway from the access point to such garage, carport or fenced area to the street property line.

9Not Used.

10.a. For developments consisting of three or more single-detached dwellings located on a single parcel, the setback shall be ten feet along any property line abutting R-1 through R-8, except for structures in on-site play areas required in ISDC 21A.14.190, which shall have a setback of five feet.

b. for townhouse and apartment development, the setback shall be twenty feet along any property line abutting R-1 through R-8, except for structures in on-site play areas required in ISDC 21A.14.190, which shall have a setback of five feet, unless the townhouse or apartment development is adjacent to property upon which an existing townhouse or apartment development is located.

11. Lots smaller than .5 acre in area shall comply with standards of the nearest comparable R-4 through R-8 zone. For lots that are .5 acre in area or larger, the maximum impervious surface area allowed shall be at least 10,000 square feet. On any lot over one acre in area, an additional five percent of the lot area may be used for buildings related to agricultural or forestry practices. For lots smaller than two acres but larger than .5 acre, an additional ten percent of the lot area may be used for structures which are determined to be medically necessary, provided the applicant submits with the permit application a notarized affidavit, conforming with the requirements of ISDC 21A.32.170A.2.

12. For purposes of calculating minimum density, the applicant may request that the minimum density factor be modified based upon the weighted average slope of the net buildable area(s) of the site pursuant to ISDC 21A.12.087.

13. Reserved.

14. The base height to be used only for projects as follows:

a. in R-6 and R-8 zones, a building with a footprint built on slopes exceeding a fifteen percent finished grade; and

b. in the R-18zoneusing residential density incentives and transfer of density credits pursuant to this title.

15. Density applies only to dwelling units and not to sleeping units.

16. Vehicle access points from garages, carports or fenced parking areas shall be set back from the property line on which a joint use driveway is located to provide a straight line length of at least twenty-six feet as measured from the center line of the garage, carport or fenced parking area, from the access point to the opposite side of the joint use driveway.

17. All subdivisions and short subdivisions in the R-1 zone shall be required to be clustered away from sensitive areas or the axis of designated corridors such as urban separators or the wildlife habitat network to the extent possible and a permanent open space tract that includes at least fifty percent of the site shall be created. Open space tracts shall meet the provisions of ISDC21A.14.040.

18. See ISDC 21A.12.085.

19. Not Used.

20. Not Used.

21A.12.040 A. Densities and dimensions - Resource and commercial/industrial zones.

ZONES			COMMERCIAL						
					NEIGH-BOR HOOD BUSINESS	COMMUNITY BUSINESS		OFFICE	
STANDARDS					NB	CB		O	
Base Density: Dwelling Unit/Acre					8 du/ac (2)	18 du/ac (2)		36 du/ac (2)	
Maximum Density: Dwelling Unit/Acre					12 du/ac (3)	24 du/ac (3)		48 du/ac (3)	
Minimum Lot Area									
Maximum Lot Depth/ Width Ratio									
Minimum Street Setback					10 ft (5)	10 ft (5)		10 ft	
Minimum Interior Setback					20 ft (7) (14)	20 ft (7)		20 ft (7)	
Base Height (10)					35 ft 45 ft (6)	35 ft 60 ft (6)		45 ft 60 ft (6)	
Maximum Floor/Lot Ratio: Square Feet					1/1 (9)	1.5/1 (9)		2.5/1 (9)	
Maximum Impervious Surface: Percentage (13)					85%	85%		75%	

B. Development Conditions.

1. Reserved.

2. These densities are allowed only through the application of mixed use development standards and for stand-alone townhouse development in the NB zone on property designated commercial outside of center in the urban area.

3. These densities may only be achieved through the application of residential density incentives or transfer of density credits in mixed use developments and for stand-alone townhouse development in the NB zone on property designated commercial outside of center in the urban area. See ISDC 21A.34 and 21A.36.

4.Not Used

5. Gas station pump islands shall be placed no closer than twenty-five feet to street front lines.

6. This base height allowed only for mixed use developments and for stand-alone townhouse development in the NB zone on property designated commercial outside of center in the urban area.

7. Required on property lines adjoining residential zones.

8. Required on property lines adjoining residential zones for industrial uses established by conditional use permits.

9. The floor/lot ratio for mixed use developments shall conform to ISDC 21A.14.

10. Height limits may be increased when portions of the structure building which exceed the base height limit provide one additional foot of street and interior setback for each foot above the base height limit, provided the maximum height may exceed seventy-five feet only in mixed use developments. Netting or fencing and support structures for the netting or fencing used to contain golf balls in the operation of golf courses or golf driving ranges are exempt from the additional interior setback requirement provided that the maximum height shall not exceed seventy-five feet.

11. Not Used.

12. Not Used.

13. The impervious surface area for any lot may be increased beyond the total amount permitted in this chapter subject to approval of a conditional use permit.

14. Not Used.

21A.12.050 Measurement methods. The following provisions shall be used to determine compliance with this title:

A. Street setbacks shall be measured from the existing edge of a street right-of-way or temporary turnaround, except as provided by ISDC 21A.12.150;

B. Lot widths shall be measured by scaling a circle of the applicable diameter within the boundaries of the lot, provided that an access easement shall not be included within the circle;

C. Building height shall be measured from the average finished grade to the highest point of the roof. The average finished grade shall be determined by first delineating the smallest square or rectangle which can enclose the building and then averaging the elevations taken at the midpoint of each side of the square or rectangle, provided that the measured elevations do not include berms;

D. Lot area shall be the total horizontal land area contained within the boundaries of a lot; and

E. Impervious surface calculations shall not include areas of turf, landscaping, natural vegetation, or surface water flow control or water quality treatment facilities.

21A.12.060 Minimum urban residential density. Minimum density for residential development in the urban areas designated by the Interim Comprehensive Plan shall be based on the tables in 21A.12.030, adjusted as provided for in 21A.12.070 - .080.

A. A proposal may be phased, when compliance with the minimum density requirement results in noncompliance with the standards of ISDC 21A.28, provided the overall density of the proposal is consistent with this section.

B. Minimum density requirements may be waived by the City if the applicant demonstrates one or more of the following:

1. The proposed layout of the lots in a subdivision or the buildings in a multiple dwelling development will not preclude future residential development consistent with the minimum density of the zone.

2. The non-sensitive area of the parcel is of a size or configuration that results in lots which cannot meet the minimum dimensional requirements of the zone.

3. In the R-12 and R-18 zones, the area of the parcel required to accommodate storm water facilities exceeds 10 percent of the area of the site.

4. The site contains a national, state or county historic landmark.

C. A proposal to locate a single residential unit on a lot shall be exempt from the minimum density requirement provided the applicant either pre-plans the site by demonstrating that the proposed single residence would be located in a manner compatible with future division of the site in a manner which would meet the minimum density requirements, or locates the dwelling within fifteen feet of one or more of the site's interior lot lines.

21A.12.070 Calculations - Allowable dwelling units, lots or floor area. Permitted number of units, or lots or floor area shall be determined as follows:

A. The allowed number of dwelling units or lots (base density) shall be computed by multiplying the site area specified in ISDC 21A.12.080 by the applicable residential base density number;

B. The maximum density (unit or lot) limits shall be computed by adding the bonus or transfer units authorized by ISDC 21A.34 or 21A.36 to the base units computed under subsection A;

C. The allowed floor area, which excludes structured or underground parking areas and areas housing mechanical equipment, shall be computed by applying the floor-to-lot area ratio to the project site area specified in ISDC 21A.12.080; and

D. When calculations result in a fraction, the fraction shall be rounded to the nearest whole number as follows:

1. Fractions of .50 or above shall be rounded up; and

2. Fractions below .50 shall be rounded down.

21A.12.080 Calculations - Site area used for base density and maximum density floor area calculations. A. All site areas may be used in the calculation of base and maximum allowed residential density or project floor area except as outlined under the provisions of subsection B.

B. Submerged lands shall not be credited toward base and maximum density or floor area calculations.

21A.12.085 Calculations - Site area used for minimum density calculations. Minimum density shall be determined by:

A. Multiplying the Base Density (Dwelling Units/Acre) as set forth in ISDC 21A.12.030.A by the net buildable area of the project site; and then

B. Multiplying the resulting product by the Minimum Density percentage set forth in ISDC 21A.12.030.A or as adjusted pursuant to the provisions of ISDC 21A.12.087.

21A.12.087 Minimum density adjustments for moderate slopes. A. For purposes of calculating minimum density of sloped sites in zones R-4, R-6 and R-8, the following adjustment is permitted:

Weighted Average Slope of Net Buildable Area(s) of Site:	Minimum Density Factor:
0% - less than 5%	85%
5% - less than 15%	83%, less 1.5% for each 1% of average slope in excess of 5%
15% - less than 40%	66%, less 2.0% for each 1% of average slope in excess of 15%

B. Weighted average slope shall be calculated as follows:

1. The applicant shall submit a topographic survey of the net buildable area(s) of the site which identifies distinct areas within the following slope increments: 0-5%, 5-10%, 10-15%, etc. up to 35-40%.

2. Each slope increment will have a corresponding median slope value. This value is the midpoint of each slope increment. For instance, slope increments of 0-5% and 5-10% shall have median values of 2.5% and 7.5%, respectively.

3. The weighted average slope shall be determined by multiplying the number of square feet in each area by the median slope value in that area. For example, if the net buildable area portion of a site is 30,000 sq. ft. of which there are 10,000 square feet of 5-10% slope and 20,000 square feet of 10-15% slope, the weighted average slope would be 10.8%. See the following calculation [(10,000 sq. ft. times 7.5% plus 20,000 sq. ft. times 12.5%) divided by 30,000 sq. ft. = 10.8%].

21A.12.090 Lot area - Prohibited reduction. Any portion of a lot that was used to calculate compliance with the standards and regulations of this title shall not be subsequently subdivided or segregated from such lot.

21A.12.100 Not Used.

21A.12.110 Measurement of setbacks. A. Interior setback: the interior setback is measured from the interior lot line to a line parallel to and measured perpendicularly from the interior lot lines at the depth prescribed for each zone.

B. Street setback: the street setback is measured from the street right-of-way or the edge of a surface improvement which extends beyond a right-of-way, whichever is closer to the proposed structure, to a line parallel to and measured perpendicularly from the street right-of-way or the edge of the surface improvement at the depth prescribed for each zone.

21A.12.120 Setbacks - Specific building or use. When a building or use is required to maintain a specific setback from a property line or other building, such setback shall apply only to the specified building or use.

21A.12.122 Setbacks - Livestock buildings and manure storage areas. A. The minimum interior setback for any building used to house, confine or feed swine shall be 90 feet.

B. The minimum interior setback for any building used to house, confine or feed any other livestock shall be 25 feet.

C. The minimum interior setback for any manure storage area shall be 35 feet.

21A.12.130 Setbacks - Modifications. The following setback modifications are permitted:

A. When the common property line of two lots is covered by a building(s), the setbacks required by this chapter shall not apply along the common property line; and

B. When a lot is located between lots having nonconforming street setbacks, the required street setback for such lot may be the average of the two nonconforming setbacks or 60 percent of the required street setback, whichever results in the greater street setback.

21A.12.140 Setbacks - From regional utility corridors. A. In subdivisions and short subdivisions, areas used as regional utility corridors shall be contained in separate tracts.

B. In other types of land development permits, easements shall be used to delineate such corridors.

C.

by mutual agreement in the utility corridor.

21A.12.150 Setbacks - From alley. A. Structures may be built to a property line abutting an alley, except as provided in subsection B.

B. Vehicle access points from garages, carports or fenced parking areas shall be set back from the alley property line to provide a straight line length of at least 26 feet, as measured from the centerline of the garage, carport or fenced parking area, from the access point to the opposite edge of the alley. No portion of the garage or the door in motion may cross the property line.

21A.12.160 Setbacks - Required modifications. The following setback modifications are required:

A. In addition to providing the standard street setback, a lot adjoining a half-street or designated arterial shall provide an additional width of street setback sufficient to accommodate construction of the planned half-street or arterial; and

B. Where the standard setback for a property is modified within an adopted neighborhood plan area zoning, the applicable setback shall be that specified therein.

21A.12.170 Setbacks - Projections and structures allowed. Provided that the required setbacks from regional utility corridors of ISDC 21A.12.140, the adjoining half-street or designated arterial setbacks of ISDC 21A.12.160 and the sight distance requirements of ISDC 21A.12.210 are maintained, structures may extend into or be located in required setbacks, including setbacks as required by ISDC 21A.12.220B, as follows:

A. Fireplace structures, bay or garden windows, enclosed stair landings, closets, or similar structures may project into any setback, provided such projections are:

1. Limited to two per facade;

2. Not wider than ten feet; and

3. Not more than twenty-four inches into an interior setback or thirty inches into a street setback;

B. Uncovered porches and decks which exceed eighteen inches above the finished grade may project:

1. Eighteen inches into interior setbacks, and

2. Five feet into the street setback;

C. Uncovered porches and decks not exceeding eighteen inches above the finished grade may project to the property line;

D. Eaves may not project more than:

1. Eighteen inches into an interior setback,

2. Twenty-four inches into a street setback, or

3. Eighteen inches across a lot line in a zero-lot-line development;

E. Fences with a height of six feet or less may project into or be located in any setback.

F. Rockeries, retaining walls and curbs may project into or be located in any setback provided these structures:

1. Do no exceed a height of six feet in the R-1 through R-18 zones, and

2. Not Used

3. Do not exceed the building height for the zone in commercial zones, measured in accordance with the standards established in the Uniform Building Code, Title 16;

G. Fences located on top of rockeries, retaining walls or berms are subject to the requirements of ISDC 21A.14.220;

H. Telephone, power, light and flag poles;

I. The following may project into or be located within a setback, but may only project into or be located within a five foot interior setback area if an agreement documenting consent between the owners of record of the abutting properties is recorded with the King County department of records and elections prior to the installment or construction of the structure:

1. Sprinkler systems, electrical and cellular equipment cabinets and other similar utility boxes and vaults,

2. Security system access controls,

3. Structures, except for buildings, associated with trails and on-site recreation spaces and play areas required in ISDC 21A.14.180 and ISDC 21A.14.190 such as benches, picnic tables and drinking fountains, and

4. surface water management facilities as required by King County Code 9.04;

J. Mailboxes and newspaper boxes may project into or be located within street setbacks;

K. Fire hydrants and associated appendages;

L. Metro bus shelters may be located within street setbacks.

M. Unless otherwise allowed in ISDC 21A.20.080, free standing and monument signs four feet or less in height, with a maximum sign area of twenty square feet may project into or be located within street setbacks; and

N. Stormwater conveyance and control facilities, both above and below ground, provided such projections are:

1. Consistent with setback, easement and access requirments specified in the Surface Water Design Manual, or

2. In the absence of said specifications, not within five feet of the property line.

RETAINING WALL IN SETBACK

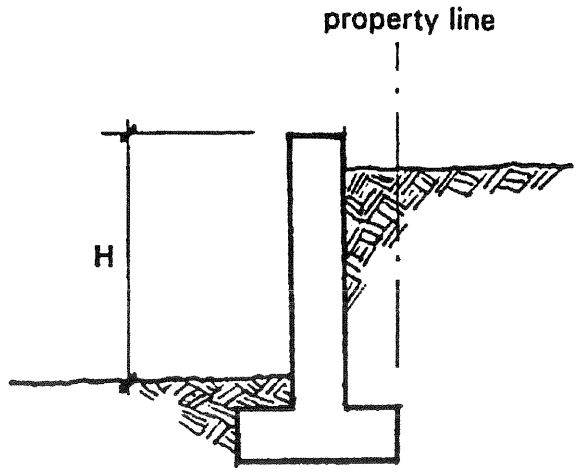

H max. 6' in R1 - R18, UR, RA & Resource Zones

H max. 8' in R24 and R 48 Zones, and not to exceed building height requirement in Commerical/Industrial Zones

21A.12.180 Height - Exceptions to limits. The following structures may be erected above the height limits of ISDC 21A.12.030-.050.

A. Roof structures housing or screening elevators, stairways, tanks, ventilating fans or similar equipment required for building operation and maintenance; and

B. Fire or parapet walls, skylights, flagpoles, chimneys, smokestacks, church steeples, crosses, spires, communication transmission and receiving structures, utility line towers and poles, and similar structures.

21A.12.190 Not Used.

21A.12.200 Lot divided by zone boundary. When a lot is divided by a zone boundary, the following rules shall apply:

A. When a lot contains both residential and non-residential zoning, the zone boundary between the zones shall be considered a lot line for determining permitted building height and required setbacks on the site;

B. When a lot contains residential zones of varying density,

1. Any residential density transfer within the lot shall be allowed from the portion with the lesser residential density to that of the greater residential density;

2. Residential density transfer from the higher density zone to the lower density zone may be allowed only when:

a. the units transferred from any R-12 or R-18 zoned portion of the lot are maintained in an attached dwelling unit configuration on the lower density portion receiving such units,

b. the transfer does not reduce the minimum density achievable on the lot,

c. the transfer enhances the efficient use of needed infrastructure,

d. the transfer does not result in significant adverse impacts to the low density portion of the lot,

e. the transfer contributes to preservation of environmentally sensitive areas, wildlife corridors, or other natural features, and

f. the transfer does not result in significant adverse impacts to adjoining lower density properties.

3. Compliance with these criteria shall be evaluated during review of any development proposals in which such a transfer is proposed; and

C. Uses on each portion of the lot shall only be those permitted in each zone pursuant to ISDC 21A.08.

21A.12.210 Sight distance requirements. Except for utility poles and traffic control signs, the following sight distance provisions shall apply to all intersections and site access points:

A. A sight distance triangle area as determined by Section 21A.12.210B shall contain no fence, berm, vegetation, on-site vehicle parking area, signs

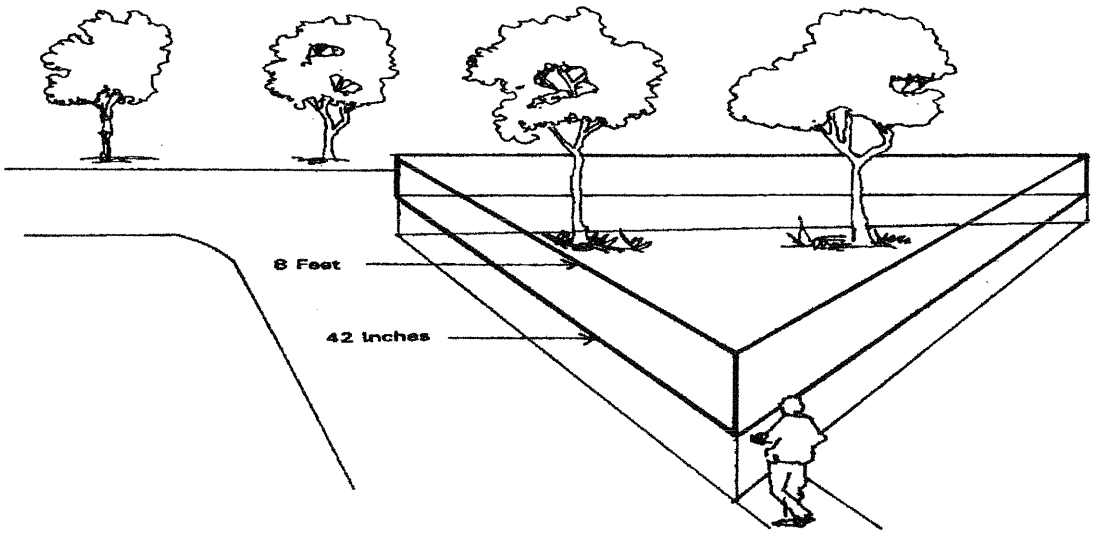

NOTE: The area of a sight distance triangle between 42 inches and eight feet above the existing street grade shall remain open.

or other physical obstruction between 42 inches and eight feet above the existing street grade;

B. The sight distance triangle at:

1. A street intersection shall be determined by measuring 15 feet along both street property lines beginning at their point of intersection. The third side of the triangle shall be a line connecting the endpoints of the first two sides of the triangle; or

2. A site access point shall be determined by measuring 15 feet along the street lines and 15 feet along the edges of the driveway beginning at the respective points of intersection. The third side of each triangle shall be a line connecting the endpoints of the first two sides of each triangle; and

C. The director may require modification or removal of structures or landscaping located in required street setbacks, if:

1. Such improvements prevent adequate sight distance to drivers entering or leaving a driveway, and,

2. No reasonable driveway relocation alternative for an adjoining lot is feasible.

21A.12.220 Not Used.

21A.12.230 Personal services and retail uses in R-4 and R-18 zones. The general personal service use (SIC # 72 except 7216, 7218 and 7261) listed in ISDC 21A.08.050 and the retail uses, listed in ISDC 21A.08.070 which are located in the R-4 and R-18 zones shall be subject to the following requirements:

A. Each individual establishment shall not exceed 5,000 square feet of gross floor area and the combined total of all contiguous commercial establishments shall not exceed 15,000 square feet of gross floor area;

B. Establishments shall not be located less than one mile from another commercial establishment, unless located with other establishments meeting the criteria in paragraph A;

C. Establishment sites shall abut an intersection of two public streets, each of which is designated as a neighborhood collector or arterial and which has improved pedestrian facilities for at least 1/4th mile from the site;

D. The maximum on-site parking ratios for establishments and sites shall be 2 per 1000 square feet and required parking shall not be located between the building(s) and the street; and

E. Buildings shall comply with the building facade modulation and roofline variation requirements in ISDC 21A.14.080 and .090 and at least one facade of the building shall be located within five feet of the sidewalk.

F. If the personal service or retail use is located in a building with multifamily uses, then the commercial use shall be on the ground floor and shall not exceed 25 percent of the total floor area of the building.

G. Sign and landscaping standards for the use apply.

DEVELOPMENT STANDARDS - DESIGN REQUIREMENTS

Sections:

21A.14.010 Purpose.
21A.14.020 Not Used 21A.14.030 Lot segregations - Zero lot line development.
21A.14.040 Lot segregations - Clustered development.
21A.14.050 Lot segregations - UR zone reserve tract.
21A.14.060 Townhouse development.
21A.14.070 Attached dwellings and group residences - Applicability.
21A.14.080 Attached dwellings and group residences - Vehicular access and parking location.
21A.14.090 Attached dwellings and group residences - Building facade modulation.
21A.14.110 Mixed use development - Percentages of residential uses.
21A.14.120 Mixed use development - Residential density.
21A.14.130 Mixed use development - Building floor area.
21A.14.140 Mixed use development - Shared parking.
21A.14.150 Mobile home parks - Standards for existing parks.
21A.14.160 Mobile home parks - Standards for new parks.
21A.14.170 Not Used.
21A.14.185 Recreation space - Fees in lieu of.
21A.14.190 On-site recreation - Play areas required.
21A.14.200 On-site recreation - Maintenance of recreation space or dedication.
21A.14.210 Storage space and collection points for recyclables.
21A.14.220 Fences.
21A.14.240 Trail corridors - Design standards.
21A.14.250 Trail corridors - Maintenance of trail corridors/improvements.
21A.14.260 Wildlife habitat corridors - Applicability.
21A.14.270 Wildlife habitat corridors - Design standards.
21A.14.280 Not Used.

21A.14.010 Purpose. The purpose of this chapter is to improve the quality of development by providing building and site design standards that:

A. Reduce the visual impact of large residential buildings from adjacent streets and properties;

B. Enhance the aesthetic character of large residential buildings;

C. Contain sufficient flexibility of standards to encourage creative and innovative site and building design;

D. Meet the on-site recreation needs of project residents;

E. Enhance aesthetics and environmental protection through site design; and

F. Allow for continued or adaptive reuse of historic resources while preserving their historic and architectural integrity.

21A.14.020 Not Used.

21A.14.030 Lot segregations - Zero lot line development. In the NB zone on property designated commercial outside of center in the urban area, interior setbacks may be modified during subdivision or short subdivision review as follows:

A. If a building is proposed to be located within a normally required interior setback:

1. An easement shall be provided on the abutting lot of the subdivision that is wide enough to ensure a 10-foot separation between the walls of structures on adjoining lots, except as provided for common wall construction;

2. The easement area shall be free of permanent structures and other obstructions that would prevent normal repair and maintenance of the structure's exterior;

3. Buildings utilizing reduced setbacks shall not have doors that open directly onto the private yard areas of abutting property. Windows in such buildings shall not be oriented toward such private yard areas unless they consist of materials such as glass block, textured glass, or other opaque materials, and shall not be capable of being opened, except for clerestory-style windows or skylights; and

4. The final plat or short plat shall show the approximate location of buildings proposed to be placed in a standard setback area.

B. Not Used.

21A.14.040 Lot segregations - Clustered development. When residential lot clustering is proposed, the following provisions shall be met:

A. Any open space resulting from lot clustering shall not be altered or disturbed except as specified on recorded documents creating the open space. Such open spaces may be retained under ownership by the subdivider, conveyed to residents of the development, or conveyed to a third party. When access to the open space is provided, the access shall be located in a separate tract, and

B. Not Used.

C. In the R-1 zone, open space tracts created by clustering required by ISDC 21A.12.030 shall be located and configured to create urban separators and greenbelts as required by the Interim Comprehensive Planto connect and increase protective buffers for environmentally

ISDC 21A.06.1065, to connect and protect wildlife habitat corridors designated by the Interim Comprehensive Plan, and to connect existing or planned public parks or trails. The City may require open space tracts created under this subsection to be dedicated to the City, an appropriate managing public agency, or qualifying private entity such as a nature conservancy.

21A.14.050 Not Used.

21A.14.060 Townhouse development. In the R-1 through R-8 zones and in the NB zone on property designated commercial outside of center in the urban area, a building that contains a grouping of attached townhouse units shall not exceed a 200-foot maximum length without a separation of at least 10 feet from other groupings or rows of townhouses.

21A.14.070 Attached dwellings and group residences - Applicability. The standards of ISDC 21A.14.080 through 21A.14.090 shall apply to all new apartment developments exceeding four dwelling units, new townhouse development and new group residences except Class I Community Residential Facilities ("CRF-I"). Expansions of existing development that involve four or more dwelling units shall be subject to compliance with ISDC 21A.14.080 to 21A.14.090.

21A.14.080 Attached dwellings and group residences - Vehicular access and parking location. A. On sites abutting an alley constructed to a width of at least 20 feet, apartment and townhouse development and all group residences except Class I Community Residential Facilities ("CRF-I") shall have parking areas placed to the rear of buildings with primary vehicular access via the alley, except when waived by the director due to physical site limitations.

B. When alley access is provided, no additional driveway access from the public street shall be allowed except as necessary to access parking under the structure or for fire protection.

C. When the number of uncovered common parking spaces for attached dwellings and group residences exceed 30 spaces and when there is alley access, no more than 50 percent of these uncovered parking spaces shall be permitted between the street property line and any building, except when authorized by the director due to physical site limitations.

21A.14.090 Attached dwellings and group residences - Building facade modulation. Apartment and townhouse developments and all group residences shall provide building facade modulation on facades exceeding 60 feet and facing abutting streets or properties zoned R-1 through R-4. The following standards shall apply:

A. The maximum wall length without modulation shall be 30 feet; and

B. The sum of the modulation depth and the modulation width shall be no less than eight feet. Neither the modulation depth nor the modulation width shall be less than two feet.

C. Any other technique approved by the director that achieves the intent of this section.

21A.14.110 Mixed use development - Percentages of residential uses. Residential uses in mixed use developments shall be subject to the following limits:

A. A maximum of fifty percent of the total built floor area when located in NB zones; and

B. A maximum of seventy-five percent of the total built floor area when located in CB and O zones provided that the total percentage may be increased by an additional ten percent with the approval of the d

Director.

21A.14.120 Mixed use development - Residential density. Base residential density for mixed use developments shall be determined using total site area according to K.C.C. 21A.12.040A.

21A.14.130 Mixed use development - Building floor area. A. For mixed use developments that utilize at least 25 percent of building square footage for residential uses in the NB zone and at least 50 percent of building square footage in the CB or O zones, the building floor area ratio shall be as follows:

1. 1.5/1 in NB zones;
2. 3.5/1 in CB zones; and
3. 4.0/1 in O zones;

B. Building floor area ratios of subsection A may be increased when all required parking is contained within a common parking structure, as follows:

1. 2.0/1 in NB zones;
2. 4.5/1 in CB zones; and
3. 5.0/1 in O zones.

21A.14.140 Mixed use development - Shared parking. For mixed use developments, a 20 percent reduction of required parking shall be permitted when the criteria of ISDC 21A.18.040. for shared parking facilities are met. 21A.14.150 Mobile home parks - Standards for existing parks. A. Mobile home parks established prior to August 3, 1999shall continue to be governed by all standards relating to density, setbacks, landscaping and off-street parking in effect at the time they were approved.

B. Placement of new accessory structures and replacement mobile homes, either standard or nonstandard, in these mobile home parks shall be governed by the dimensional standards in effect when the parks were approved, unless two or more replacement mobile homes are proposed to be installed adjacent to each other under the flexible setback option set forth in ISDC 21A.14.170. Where internal setbacks are not specified, the average of the prevailing setbacks on the pads to either side of the proposed new or replacement structure shall apply.

C. No spaces or pads in an existing mobile home park shall be used to accommodate recreational vehicles (RVs), except when the spaces or pads were specifically for RVs at the time the park was established.

D. An existing mobile home park may be enlarged, provided the proposed enlargement meets the standards set forth in K.C.C. 21A.14.160 and K.C.C. 21A.14.170.

E. Both insignia and non-insignia mobile homes may be installed in established parks, provided that all mobile homes supported by piers shall be fully skirted, and that nonstandard mobile homes shall meet the minimum livability and safety requirements set forth in K.C.C. Title 16, Building Code and Construction Standards.

21A.14.160 Mobile home parks - Standards for new parks. New mobile home parks shall be developed subject to the following standards:

A. A mobile home park shall be at least three acres in area;

B. Residential densities in a mobile home park shall be as follows:

1. Six dwellings per acre in R-4 zone;
2. The base density of the zone in which the park is located in all R-6 through R-18 zones; and
3. Mobile home parks shall be eligible to achieve the maximum density permitted in the zone by providing the affordable housing benefit for mobile home parks set forth in ISDC 21A.34;

provided that non-insignia mobile homes shall meet the minimum livability and safety requirements set forth in ISDC Title 16, Uniform Building Code;

D. A mobile home park shall be exempt from impervious surface limits set forth in ISDC 21A.12;

E. At least one of the off-street parking spaces required for each mobile home shall be located on or adjacent to each mobile home pad;

F. Internal roads and sidewalks shall provide access to each mobile home space and shall be constructed in accordance with the adopted Interim Street Standards for residential minor access streets;

G. There shall be a minimum of ten feet of separation maintained between all mobile homes on the site, unless the flexible setback option set forth in ISDC 21A.14.170 is used. Accessory structures shall be located no closer than:

1. Ten feet to mobile homes on adjacent spaces, unless constructed of noncombustible materials, in which case the minimum setback shall be five feet;

2. Five feet to accessory structures of mobile homes on adjacent spaces; and

3. Five feet to the mobile home or other accessory structures on the same space, except a carport or garage may be attached to the mobile home, and the separation may be waived when such structures are constructed of noncombustible materials;

H. All mobile homes and RVs supported by piers shall be fully skirted; and

I. A mobile home park may include a storage area for RVs owned by residents of the park, provided the storage area contains no utility hook-ups and no RV within the storage area shall be used as living quarters.

21A.14.170 Not Used.

21A.14.180 On-site recreation - Space required. A. Stand-alone townhouse developments in the NB zone on property designated commercial outside of center in the urban

area of more than four units, and mixed use developments if more than four units, shall provide recreation space for leisure, play and sport activities as follows:

1. Townhouses developed at a density of eight units or less per acre - 390 square feet per unit;

2. Not Used.

3. Townhouses developed at a density of greater than eight units per acre, and mixed use:

a. Studio and one bedroom - 90 square feet per unit;

b. Two bedroom - 130 square feet per unit; and

c. Three or more bedroom - 170 square feet per unit.

B. Any recreation space located outdoors shall:

1. Be of a grade and surface suitable for recreation;

2. Be on the site of the proposed development;

3. Have no dimensions less than 20 feet (except trail segments);

4. In Townhouse subdivisions, when the required outdoor recreation space exceeds 5000 feet, the space shall have a street roadway or parking area frontage along 10 percent or more of the recreation space perimeter (except trail segments);

5. Be accessible and convenient to all residents within the development; and

6. Be accessible by trail or walkway to any existing or planned community park, public open space or trail system, which may be located on adjoining property.

C. Indoor recreation areas may be credited towards the total recreation space requirement, when the county determines that such areas are located, designed and improved in a manner

[illegible] provides recreational opportunities functionally equivalent to those recreational opportunities available outdoors. For senior citizen assisted housing, indoor recreation areas need not be functionally equivalent but may include social areas, game and craft rooms, and other multi-purpose entertainment and education areas.

D.Stormwater runoff tracts may be credited for up to 50% of the on-site recreation space requirement, subject to the following criteria:

1. The stormwater runoff tract is dedicated or reserved as a part of a recreation space tract;

2. The detention pond shall be constructed to meet the following conditions:

a. The side slope of the stormwater facilities shall not exceed 33% unless slopes are existing, natural and covered with vegetation;

b. A bypass system or an emergency overflow pathway shall be designed to handle flow exceeding the facility design and located so that it does not pass through active recreation areas or present a safety hazard;

c. The stormwater facilities shall be landscaped in a manner to enhance passive recreation opportunities such as trails and aesthetic viewing; and

d. The stormwater facilities shall be designed so they do not require fencing pursuant to the Surface Water Design Manual.

3. In the case of joint use of the tract for stormwater facilities and recreation space, the City shall be responsible for maintenance of the stormwater facilities only and will require an access easement for that purpose.

21A.14.185 Recreation space - Fees in lieu of. If on-site recreation space is not provided, the applicant shall pay a fee-in-lieu of actual recreation space. The City's acceptance of this payment is discretionary, and may be permitted if the proposed on-site recreation space does not meet the criteria of this chapter, or the recreation space provided within a county park in the vicinity will be of greater benefit to the prospective residents of the development. Fees provided in-lieu of on-site recreation space shall be determined annually by the City on the basis of the typical market value of the required recreation space land area prior to the development. Any recreational space provided by the applicant shall be credited toward the required fees.

21A.14.190 On-site recreation - Play areas required. A. All single detached subdivisions, apartment, townhouse and mixed use development, excluding age restricted senior citizen housing, shall provide to children play areas within the recreation space on-site, except when facilities are available to the public within 1/4 mile that are developed as parks or playgrounds and are accessible without crossing of arterial streets.

B.If any play apparatus is provided in the play area, the apparatus shall meet Consumer Product Safety Standards for equipment, soft surfacing and spacing, and shall be located in an area that is:

1. At least 400 square feet in size with no dimension less than twenty feet; and

2. Adjacent to main pedestrian paths or near building entrances.

21A.14.200 On-site recreation - Maintenance of recreation space or dedication. A. Recreation space as defined in ISDC 21A.14.180B may be dedicated as a park open to the public in lieu of providing the on-site recreation required above when the following criteria are met:

1. The dedicated area is at least twenty acres in size, except when adjacent to an existing or planned public park;

a. Shoreline access,

b. Regional trail linkages,

c. Habitat linkages,

d. Recreation facilities, or

e. Heritage sites; and

3. The dedicated area is located within 1 mile of the project site.

B. Unless the recreation space is dedicated to the City pursuant to subsection A., maintenance of any recreation space retained in private ownership shall be the responsibility of the owner or other separate entity capable of long-term maintenance and operation in a manner acceptable to the the City.

21A.14.210 Storage space and collection points for recyclables. Developments shall provide storage space for the collection of recyclables as follows:

A. The storage space shall be provided at the following rates, calculated based on any new dwelling unit in multiple-dwelling developments and any new square feet of building gross floor area in any other developments:

1. One and one-half square feet per dwelling unit in multiple-dwelling developments except where the development is participating in a county-sponsored or approved direct collection program in which individual recycling bins are used for curbside collection;

2. Two square feet per every 1,000 square feet of building gross floor area in office, educational and institutional developments;

3. Three square feet per every 1,000 square feet of building gross floor area in manufacturing and other nonresidential developments; and

4. Five square feet per every 1,000 square feet of building gross floor area in retail developments.

B. The storage space for residential developments shall be apportioned and located in collection points as follows:

1. The required storage area shall be dispersed in collection points throughout the site when a residential development comprises more than one building.

2. There shall be one collection point for every 30 dwelling units.

3. Collection points may be located within residential buildings, in separate buildings/structures without dwelling units, or outdoors.

4. Collection points located in separate buildings/structures or outdoors shall be no more than 200 feet from a common entrance of a residential building.

5. Collection points shall be located in a manner so that the swing of any collection point gate does not obstruct pedestrian or vehicle traffic or access to parking or that the gate swing or any hauling truck does not project into any public right-of-way.

C. The storage space for nonresidential developments shall be apportioned and located in collection points as follows:

1. Storage space may be allocated to a centralized collection point.

2. Outdoor collection points shall not be located in any required setback areas.

3. Collection points shall be located in a manner so that the swing of any collection point gate does not obstruct pedestrian or vehicle traffic or access to parking or that the gate swing or any hauling truck does not project into any public right-of-way.

4. Access to collection points may be limited, except during regular business hours and/or specified collection hours.

D. The collection points shall be designed as follows:

1. Dimensions of the collection points shall be of sufficient width and depth to enclose containers for recyclables.

2. Architectural design of any structure enclosing an outdoor collection point or any building primarily used to contain a collection point shall be consistent with the design of the primary structure(s) on the site.

3. Collection points shall be identified by signs not exceeding two square feet.

4. A six-foot wall or fence shall enclose any outdoor collection point, excluding collection points located in industrial developments that are greater than 100 feet from residentially zoned property.

5. Enclosures for outdoor collection points and buildings used primarily to contain a collection point shall have gate openings at least 12 feet wide for haulers. In addition, the gate opening for any building or other roofed structure used primarily as a collection point shall have a vertical clearance of at least 12 feet.

6. Weather protection of recyclables shall be ensured by using weather-proof containers or by providing a roof over the storage area.

E. Only recyclable materials generated on-site shall be collected and stored at such collection points. Except for initial sorting of recycables by users, all other processing of such materials shall be conducted off-site.

requirements set forth in this section if the Director finds,

in writing, that an alternate recycling program design proposed by the applicant meets the needs of the development and provides an equivalent or better level of storage and collection for recyclables.

21A.14.220 Fences. Fences are permitted as follows: A. Fences exceeding a height of six feet shall comply with the applicable street and interior setbacks of the zone in which the property is located, except;

1. Fences located on a rockery, retaining wall, or berm within a required setback area are permitted subject to the following requirements;

a. In R-1 through R-18 zones:

(1) The total height of the fence and the rockery, retaining wall or berm upon which the fence is located shall not exceed a height of ten feet. This height shall be measured from the top of the fence to the ground on the low side of the rockery, retaining wall or berm; and

(2) The total height of the fence itself, measured from the top of the fence to the top of the rockery, retaining wall or berm, shall not exceed six feet.

b. In the R-24, R-18 and commercial zones, the height of the fence, measured from the top of the fence to the top of the rockery, retaining wall or berm, shall not exceed six feet.

c. Any portion of the fence above a height of eight feet, measured to include both the fence and the rockery, retaining wall, or berm (as described in a1. above), shall be an open-work fence.

B. Fences located on a rockery, retaining wall or berm outside required setback areas shall not exceed the building height for the zone, measured in accordance with the standards established in the Uniform Building Code, Title 16.

RETAINING WALL WITH FENCE IN SETBACK

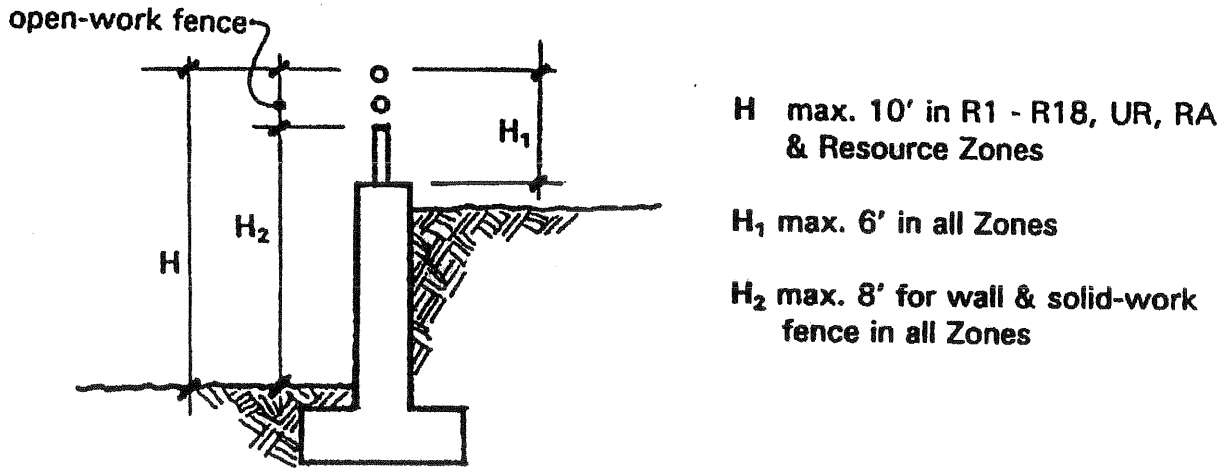

C. Electric fences shall:

1. Be permitted in all zones, provided that when placed within R-4 through R-18 zones, additional fencing or other barriers shall be constructed to prevent inadvertent contact with the electric fence from abutting property;

2. Comply with the following requirements:

a. An electric fence using an interrupted flow of current at intervals of about one second on and two seconds off shall be limited to 2,000 volts at 17 milliamp;

b. An electric fence using continuous current shall be limited to 1,500 volts at seven milliamp;

c. All electric fences in the R-4 through R-18 zones shall be posted with permanent signs a minimum of 36 square inches in area at 50 foot intervals stating that the fence is electrified; and

d. Electric fences sold as a complete and assembled unit can be installed by an owner if the controlling elements of the installation are certified by an A.N.S.I. approved testing agency; and

D. Except as specifically required for the necessary security related to a nonresidential use, no barbed or razor-wire fence shall be located in any R-4 through R-18 zone.

21A.14.230 Trail corridors - Applicability. Trail easements shall be provided by any development, except for single detached residential permits, when such developments are located within an adopted City Plan. The residents or tenants of the development shall be provided access to the trail easement. The area of the trail easement shall be counted as part of the site for purposes of density and floor area calculations.

21A.14.240 Trail corridors - Design standards. Trail design shall be reviewed by the Department of Community Development for consistency with adopted standards for:

A. Width of the trail corridor;

B. Location of the trail corridor on the site;

C. Surfacing improvements; and

D. Use(s) permitted within the corridor.

21A.14.250 Trail corridors - Maintenance of trail corridors/improvements. Maintenance of any trail corridor or improvements, retained in private ownership, shall be the responsibility of the owner or other separate entity capable of long-term maintenance and operation in a manner acceptable to the City.

21A.14.260 Wildlife habitat corridors - Applicability. Habitat corridors shall be set aside and protected along the designated wildlife habitat network adopted by the Interim Comprehensive Plan as follows:

A. Wildlife habitat corridors shall apply to the following development activities on parcels which include a portion of a designated wildlife habitat corridor:

1. All urban planned developments, subdivisions and short subdivisions;
2. All building permits on individual lots created prior to January 1, 1995.

1. Urban planned developments, subdivisions and short subdivisions shall either place the corridor in a contiguous permanent open-space tract with all developable lots sited on the remaining portion of the project site, or shall design the lots so that conservation easements on individual lots can form a contiguous easement covering the corridor.

2. Individual lots shall place the corridor in a conservation easement.

C. Not Used.

21A.14.270 Wildlife habitat corridors - Design standards. Corridor design shall be reviewed by the Department for consistency with the following standards:

A. The wildlife habitat corridor shall be sited on the property in order to meet the following conditions:

1. Forms one contiguous tract that enters and exits the property at the points the designated wildlife habitat network crosses the property boundary;

2. Maintains a width, wherever possible, of 300 feet. The network width shall not be less than 150 feet wide at any point;

3. Be contiguous with and may include sensitive area tracts and their buffers; and

B. When feasible, the wildlife habitat corridor shall be sited on the property in order to meet the following conditions:

1. Connect isolated sensitive areas or habitat; and

2. Connect with wildlife habitat corridors, open space tracts or wooded areas on adjacent properties, if present.

C. The wildlife corridor tract shall be permanently marked consistent with the methods contained in ISDC 21A.24.160. Conservation easements are exempt from the permanent marking requirement.

D. A management plan for the wildlife corridor contained within a tract or tracts shall be prepared which specifies the permissible extent of recreation, forestry or other uses compatible with preserving and enhancing the wildlife habitat value of the tract or tracts. The management plan shall be reviewed and approved by the department. The approved management plan for an urban planned development or subdivision shall be contained within and recorded with the covenants, conditions and restrictions (CCRs). If the wildlife corridor is contained in a conservation easement, a management plan is not required, but may be submitted to the department for review and approval, and recorded with the conservation easement.

E. Clearing within the wildlife corridor contained in a tract or tracts shall be limited to that allowed by the management plan. No clearing shall be allowed within a wildlife corridor contained within a conservation easement on individual lots, unless the property owner has an approved management plan.

F. A homeowners association or other entity capable of long term maintenance and operation shall be established to monitor and assure compliance with the management plan.

G. Wildlife corridors set aside in tracts or conservation easements shall meet the provisions in ISDC 16.82.150.

H. The permanent open space tract containing the wildlife corridor may be credited toward the other applicable requirements such as surface water management and the recreation space requirement of ISDC 21A.14.180, provided

the proposed uses within the tract are compatible with preserving and enhancing the wildlife habitat value. Restrictions on other uses within the wildlife corridor tract shall be clearly identified in the management plan.

I. At the discretion of the Director, these standards may be waived or reduced for public facilities such as schools, fire stations, parks, and public road projects.

21A.14.280 Not Used.

21A.16.010Chapter 21A.16
DEVELOPMENT STANDARDS - LANDSCAPE AND IRRIGATION

Sections:

21A.16.010 Purpose.
21A.16.020 Application.
21A.16.030 Not Used. 21A.16.040 Landscaping - Screen types and description.
21A.16.050 Landscaping - Street frontages.
21A.16.060 Landscaping - Interior lot lines.
21A.16.070 Landscaping - Surface parking areas.
21A.16.080 Not Used. 21A.16.085 Landscaping - General standards for all landscape areas.
21A.16.090 Landscaping - Additional standards for required landscape areas.
21A.16.100 Landscaping - Alternative options.
21A.16.115 Landscaping - Plan design, design review, and installation.
21A.16.180 Maintenance.
21A.16.190 Financial guarantees.
21A.16.300 Water use - Applicability of water budget for landscape areas.
21A.16.310 Water use - Irrigation water budget calculated.
21A.16.320 Water use - Estimated water use calculated.
21A.16.330 Water use - Irrigation efficiency goals and system design standards.
21A.16.340 Water use - Irrigation system design, design review and audit at installation.
21A.16.350 Water use - Irrigation design plan contents.
21A.16.360 Water use - Irrigation schedules.
21A.16.370 Water use - Irrigation system maintenance.

21A.16.010 Purpose. The purpose of this chapter is to preserve the aesthetic character of communities; to improve the aesthetic quality of the built environment; to promote retention and protection of existing vegetation; to promote water efficiency; to promote native wildlife; to reduce the impacts of development on drainage systems and natural habitats; and to increase privacy for residential zones by:

A. Providing visual relief from large expanses of parking areas and reduction of perceived building scale;

B. Providing physical separation between residential and non-residential areas;

C. Providing visual screens and barriers as a transition between differing land uses;

D. Retaining existing vegetation and significant trees by incorporating them into the site design;

E. Providing increased areas of permeable surfaces to allow for:

1. Infiltration of surface water into groundwater resources;
2. Reduction in the quantity of storm water discharge; and
3. Improvement in the quality of storm water discharge;

F. Encouraging the use of native plant species by their retention or use in the landscape design;

G. Requiring water use efficiency through water budgeting and efficient irrigation design standards;

H. Encouraging the use of a diversity of plant species which promote native wildlife habitat.

21A.16.020 Application. Except for communication facilities regulated pursuant to ISDC 21A.26, all new development listed in ISDC 21A.16.030 shall be subject to the landscaping provisions of this chapter, provided that specific landscaping and tree retention provisions for uses established through a conditional use permit, a special use permit, or an urban planned development application shall be determined during the applicable review process.

21A.16.030 Section 21A.16.030 – Not Used

21A.16.040 Landscaping - Screen types and description. The three types of landscaping screens are described and applied as follows:

A. Type I landscaping screen:

1. Type I landscaping is a "full screen" that functions as a visual barrier. This landscaping is typically found between residential and non-residential areas.

2. Type I landscaping shall minimally consist of:

a. A mix of primarily evergreen trees and shrubs generally interspersed throughout the landscape strip and spaced to form a continuous screen;

b. Between 70 and 90 percent evergreen trees;

c. Trees provided at the rate of one per 10 linear feet of landscape strip and spaced no more than 30 feet apart on center;

d. Evergreen shrubs provided at the rate of one per linear four feet of landscape strip and spaced no more than 8 feet apart on center; and

e. Ground cover pursuant to ISDC 21A.16.090;

B. Type II landscaping screen:

1. Type II landscaping is a "filtered screen" that functions as a visual separator. This landscaping is typically found between commercial and industrial uses; between differing types of residential development; and to screen industrial uses from the street;

2. Type II landscaping shall minimally consist of:

a. A mix of evergreen and deciduous trees and shrubs generally interspersed throughout the landscape strip spaced to create a filtered screen;

b. At least 50 percent deciduous trees and at least 30 percent evergreen trees;

c. Trees provided at the rate of one per 20 linear feet of landscape strip and spaced no more than 30 feet apart on center;

d. Shrubs provided at the rate of one per four linear feet of landscape strip and spaced no more than eight feet apart on center; and

e. Ground cover pursuant to ISDC 21A.16.090;

C. Type III landscaping screen:

1. Type III landscaping is a "see-through screen" that functions as a partial visual separator to soften the appearance of parking areas and building elevations. This landscaping is typically found along street frontage or between apartment developments;

2. Type III landscaping shall minimally consist of:

a. A mix of evergreen and deciduous trees generally interspersed throughout the landscape strip and spaced to create a continuous canopy;

b. At least 70 percent deciduous trees;

c. Trees provided at the rate of one per linear 25 feet of landscape strip and spaced no more than 30 feet apart on center;

d. Shrubs provided at the rate of one per four linear feet of landscape strip and spaced no more than 8 feet apart on center; and

e. Ground cover pursuant to ISDC 21A.16.090.

21A.16.050 Landscaping - Street frontages. The requiredwidth of perimeter landscaping along street frontages shall be provided as follows:

A. Twenty feet of Type II landscaping shall be provided for an institutional use, excluding playgrounds and playfields;

B. Ten feet of Type II landscaping shall be provided for an industrial development;

C. Ten feet of Type II landscaping shall be provided for an above ground utility facilities development, excluding distribution and transmission corridors, located outside a public right-of-way;

D. Ten feet of Type III landscaping shall be provided for a commercial or attached/group residence development; and

E. For single family subdivisions:

1. Trees shall be planted at the rate of one tree for every 40 feet of frontage along a neighborhood collector street or arterial street.

2. The trees shall be:

a. Located within the street right-of-way if permitted by the custodial state or local agency;

b. No more than 20 feet from the street right-of-way line when located within a lot;

c. Maintained by the adjacent landowner unless part of a county maintenance program; and

d. A species approved by the county if located within the street right-of way and compatible with overhead utility lines.

3. The trees may be spaced at irregular intervals in order to accommodate sight distance requirements for driveways and intersections.

21A.16.060 Landscaping - Interior lot lines. The requiredwidth of perimeter landscaping along interior lot lines shall be provided as follows:

A. Twenty feet of Type I landscaping shall be included in a commercial or industrial development along any portion adjacent to a residential development;

B. Five feet of Type II landscaping shall be included in an attached/group residence development, except that along portions of the development adjacent to property developed with single detached residences or vacant property that is zoned R(1-8), the requirement shall be ten feet of Type II landscaping;

C. Ten feet of Type II landscaping shall be included in an industrial development along any portion adjacent to a commercial or institutional development; and

D. Ten feet of Type II landscaping shall be included in an institutional use, excluding playgrounds and playfields, or an above-ground utility facility development, excluding distribution or transmission corridors, when located outside a public right-of-way. (

21A.16.070 Landscaping - Surface parking areas. Parking area landscaping shall be provided within surface parking areas with ten or more parking stalls for the purpose of providing shade and diminishing the visual impacts of large paved areas as follows:

A. Residential developments with common parking areas shall provide planting areas at the rate of 20 square feet per parking stall;

B. Commercial, industrial, or institutional developments, shall provide landscaping at a rate of:

1. Twenty square feet per parking stall when 10 to 30 parking stalls are provided; and

2. Twenty-five square feet per parking stall when 31 or more parking stalls are provided;

C. Trees shall be provided and distributed throughout the parking area at a rate of:

1. One tree for every five parking stalls for a commercial or industrial development; and
2. One tree for every ten parking stalls for residential or institutional development;

D. The maximum distance between any parking stall and landscaping shall be no more than 100 feet;

E. Permanent curbs or structural barriers shall be provided to protect the plantings from vehicle overhang; and

F. Parking area landscaping shall consist of:

1. Canopy-type deciduous trees, evergreen trees, evergreen shrubs and ground covers planted in islands or strips;
2. Shrubs that do not exceed a maintained height of 42 inches;
3. Plantings contained in planting islands or strips having an area of at least 100 square feet and with a narrow dimension of no less than five feet;
4. Ground cover pursuant to ISDC 21A.16.090; and
5. At least 70 percent of trees are deciduous.

21A.16.080 Not Used.

21A.16.085 Landscaping - General standards for all landscape areas. All new landscape areas proposed for a development shall be subject to the following provisions:

A. Berms shall not exceed a slope of two horizontal feet to one vertical foot (2:1).

B. All new turf areas, except all-weather, sand-based athletic fields shall:

1. Be augmented with a two-inch layer of stabilized compost material or a four (4") inch layer of organic material with a minimum of eight (8%) percent organic material cultivated a minimum of six inches deep, or
2. Have an existing organic content of eight (8) percent or more to a depth of six inches as shown in a soil sample analysis. The soil analysis shall include:
   a. Determination of soil texture, indicating percentage of organic matter,
   b. An approximated soil infiltration rate (either measured or derived from soil/texture /infiltration rate tables). A range of infiltration rates shall be noted where appropriate, and
   c. Measure Ph value.

C. Not Used.

D. Landscape areas, except turf or areas of established groundcover, shall be covered with at least two inches of stabilized compost to minimize evaporation.

E. Plants having similar water use characteristics shall be grouped together in distinct hydrozones.

F. Plant selection shall consider adaptability to climatic, geologic, and topographical conditions of the site. Preservation of existing vegetation is encouraged. (

21A.16.090 Landscaping - Additional standards for required landscape areas. In addition to the general standards of ISDC 21A.16.085, landscape areas required pursuant to ISDC 21A.16.050 through .080 shall conform to the following standards:

A. All plants shall conform to American Association of Nurserymen (AAN) grades and standards as published in the "American Standard for Nursery Stock" manual, provided that existing healthy vegetation used to augment new plantings shall not be required to meet the standards of this manual;

B. Single-stemmed trees required pursuant to this chapter shall at the time of planting conform to the following standards:

1. In parking area landscaping and in street rights-of-way:

a. Deciduous trees shall have a minimum caliper of 1.75 inches and a height of 10 feet, and

b. Coniferous and broadleaf evergreens shall be at least five feet in height;

2. In all other required landscape areas:

a. Deciduous trees shall have a minimum caliper of 1.5 inches and a height of ten feet, and

b. Coniferous and broadleaf evergreen trees shall be at least five feet in height.

C. Multiple-stemmed trees shall be permitted as an option to single-stemmed trees provided that such multiple-stemmed trees are:

1. At least six feet in height, and

2. Not allowed within street rights-of-way;

D. When the width of any landscape strip is 20 feet or greater, the required trees shall be staggered in two or more rows;

E. Shrubs shall be:

1. At least an AAN container class #2 size at time of planting in Type II, III and parking area landscaping,

2. At least 24 inches in height at the time of planting for Type I landscaping, and

3. Maintained at a height not exceeding 42 inches when located in Type III or parking area landscaping;

F. Ground covers shall be planted and spaced to result in total coverage of the majority of the required landscape area within three years.

G. All fences shall be placed on the inward side of any required perimeter landscaping along the street frontage.

H. Required street landscaping may be placed within City of Sammamish street rights-of-way subject to the King County Road Design Standards, provided adequate space is maintained along the street line to replant the required landscaping should subsequent street improvements require the removal of landscaping within the rights-of-way;

I. Required street landscaping may be placed within Washington State rights-of-way subject to permission of the Washington State Department of Transportation.

J. New landscape material provided within areas of undisturbed vegetation or within the protected area of significant trees shall give preference to utilizing indigenous plant species.

21A.16.100 Landscaping - Alternative options. The following alternative landscape options may be allowed, subject to county approval, only if they accomplish equal or better levels of screening, or when existing conditions on or adjacent to the site, such as significant topographic differences,

vegetation, structures or utilities would render application of this chapter ineffective or result in scenic view obstruction:

A. The amount of required landscape area may be reduced to ensure that the total area for required landscaping, and/or the area remaining undisturbed for the purpose of wildlife habitat or corridors does not exceed 15 percent of the net developable area of the site. For the purpose of this subsection, the net developable area of the site shall not include areas deemed unbuildable due to their location within sensitive areas and any associated buffers.

B. The average width of the perimeter landscape strip may be reduced up to 25 percent along any portion where:

1. Berms at least three feet in height or architectural barriers at least six feet in height are incorporated into the landscape design; or

2. The landscape materials are incorporated elsewhere on-site;

C. In pedestrian district overlays, street perimeter landscaping may be waived provided a site plan, consistent with the applicable adopted area zoning document, is approved that provides street trees and other pedestrian-related amenities;

D. Landscaping standards for uses located in a rural town or rural business centers designated by the comprehensive plan may be waived or modified by the director if deemed necessary to maintain the historic character of the area. Where a local or subarea plan with design guidelines has been adopted, the director shall base the landscaping modifications on the policies and guidelines of such plan.

E. When an existing structure precludes installation of the total amount of required site perimeter landscaping, such landscaping material shall be incorporated on another portion of the site.

F. Single-stemmed deciduous tree species that cannot generally be planted and established in larger sizes may have a caliper of less than 1.5 inches; and

G. The number of trees and shrubs to be provided in required perimeter and parking area landscaping may be reduced up to 25 percent when a development uses landscaping materials consisting of species typically associated with the Puget Sound Basin in the following proportions:

1. Seventy-five percent of groundcover and shrubs, and

2. Fifty percent of trees.

H. The department shall, pursuant to ISDC 2.98, develop and maintain an advisory listing of trees recommended for new plantings. Such list shall describe their general characteristics and suitability, and provide guidelines for their inclusion within required landscape areas.

21A.16.115 Landscaping - Plan design, design review, and installation.

A. The landscape plan submitted to the department shall be drawn on the same base map as the development plans and shall identify the following:

1. Total landscape area and separate hydrozones,

2. Landscape materials botanical/common name and applicable size,

3. Property lines,

4. Impervious surfaces,

5. Natural or man-made water features or bodies,

6. Existing or proposed structures, fences, and retaining walls,

7. Natural features or vegetation left in natural state, and

8. Designated recreational open space areas.

B. The proposed landscape plan shall be certified by a Washington State registered landscape architect, Washington State certified nurseryman, or Washington State certified landscaper.

C. An affidavit signed by an individual specified in subsection B, certifying that the landscaping has been installed consistent with the approved landscaping plan, shall be submitted to the department within 30 days of installation completion, unless the installed landscaping has been inspected and accepted by the department.

D. The required landscaping shall be installed no later than three months after issuance of a certificate of occupancy for the project or project phase. However, the time limit for compliance may be extended to allow installation of such required landscaping during the next appropriate planting season. A financial guarantee shall be required prior to issuance of the certificate of occupancy, if landscaping is not installed and inspected prior to occupancy.

21A.16.180 Maintenance. A. All landscaping shall be maintained for the life of the project, including water conservation practices for turf grass such as annual aeration and dethatching, top dressing and overseeding.

B. All landscape materials shall be pruned and trimmed as necessary to maintain a healthy growing condition or to prevent primary limb failure;

C. With the exception of dead, diseased or damaged trees specifically retained to provide wildlife habitat; other dead, diseased, damaged or stolen plantings shall be replaced within three months or during the next planting season if the loss does not occur in a planting season; and

D. Landscape areas shall be kept free of trash.

21A.16.190 Financial guarantees. Financial guarantees shall be required consistent with the provisions of Title 27A. This time period may be extended to one year by the director, if necessary to cover a planting and growing season.

21A.16.300 Water use - Applicability of water budget for landscape areas. Irrigation systems of any type are optional components of a landscape area. However, a water budget for irrigation purposes shall be established for all new development, except for:

A. Individually platted single dwelling (attached or detached) residential lots, provided that developer-installed landscaping in common areas of residential projects is not exempt; and

B. Any project with a total landscaped area less than 500 square feet.

21A.16.310 Water use - Irrigation water budget calculated. A. The water budget (WB) allocation shall be calculated using the following formula:

WB = (ETo) x (AF) x (LA) x (CF)

Eto: Referenced Evapotranspiration Rate (net seasonal irrigation requirement in inches - see table below)

AF: Adjustment factor value of 0.8 (i.e., 0.5 x (Eto)/0.625 irrigation efficiency coefficient)

LA: Landscape area (square feet)

CF: Conversion factor value of 0.62 (Eto inches to gallons per square foot)

Reference Eto Table - Historical Data*

	Jan	Feb	Mar	Apr	May	Jun	Jul	Aug	Sep	Oct	Nov	Dec	Season Total
Monthly Net Irrig. Requirement (Inches)	.00	.00	.00	.00	1.59	3.13	4.46	3.51	1.77	.03	.00	.00	14.49

* These figures are based on a 30-year average of National Weather Service Data and represent the amount of additional irrigation required for turf grass. The figures are adjusted for turf typically used in commercial landscaping.

B. The City shall periodically undertake an evaluation of the WB calculation formula outlined in subsection A. The evaluation shall include a recommendation to retain or modify the adjustment factor or components thereof, and shall be made in consultation with groups including landscape professionals and water purveyors.

C. The water budget will be calculated upon the total area of the site in landscape areas and in landscape water features (such as decorative ponds, pools or fountains) that are fed by irrigation water. For the purpose of calculating the water budget, "landscape area" shall mean the entire parcel, less:

1. Sensitive areas and their buffers,
2. The building footprint,
3. Driveways,
4. Paved portions of parking lots, and
5. Hardscapes (e.g., decks, patios, sidewalks, and other nonporous areas).

D. Areas such as playgrounds, sport fields, golf courses, school yards, or other recreational spaces where the turf provides a playing surface or serves other recreational purposes may be allowed additional water beyond the calculated water budget. In order to receive additional water for such turf areas, the applicant shall submit a statement designating such turf areas for recreational purposes and specifying additional water needs above the water budget. This additional water need will be based upon the Eto information for the turfgrass species or species mix used in such turf areas.

E. Landscape water features shall not use potable water unless the water feature recirculates water used in its operation.

F. The irrigation water use may be monitored by the water purveyor on a after the date of release of the performance bond.

G. Alternative water sources such as recycled waste water or rainwater are encouraged. Such water sources shall not be subject to the limits of the water budget.

21A.16.320 Water use - Estimated water use calculated. The estimated water use shall be calculated using the following provisions.

A. Estimated water use (EWU) shall be calculated for each hydrozone by using the following formula:

$$EWU = \frac{(Eto) \times (PF) \times (HA) \times (CF)}{IE}$$

Eto: Referenced Evapotranspiration Rate (net seasonal irrigation requirement in inches - see table)

PF: Plant factor value (see paragraph B)

HA: Hydrozone area (square feet)

CF: Conversion factor value of 0.62 (Eto inches to gallons per square foot)

IE: Irrigation efficiency value

B. Plant factor values shall be as follows, but may be adjusted pursuant to subsection C:

1. 0 to 0.3 for low water use plants,
2. 0.4 to 0.6 for average water use plants, and
3. 0.7 to 1.0 for high water use plants.

C. For each hydrozone, plant factor values may be determined and adjusted by the designer (based on professional judgment and applicable reference materials) considering the relevant factors such as:

1. Water requirements of the various plant species proposed,
2. Density of the plantings,
3. Microclimate of the site, and
4. Soil conditions.

21A.16.330 Water use - Irrigation efficiency goals and system design standards. For purposes of this section, irrigation shall include any means of applying water to landscaped areas. All irrigation is at the applicant's option. Manually applied irrigation methods shall comply with subsections A and B. Irrigation applied through installed irrigation systems shall comply with subsections A through C:

A. Irrigation water shall be applied with goals of avoiding runoff, low head drainage, overspray, or other similar conditions where water flows onto adjacent property, nonirrigated areas, and impervious surfaces by:

1. Considering soil type and infiltration rates,
2. Using proper irrigation equipment and schedules, including features such as repeat cycles, to closely match application rates with infiltration rates, and
3. Considering special problems posed by irrigation on slopes and in median strips.

B. All irrigation water outlets, except those using alternative water sources, shall be downstream of the meter used to measure irrigation water use.

C. Irrigation systems shall be subject to the following additional provisions:

1. Systems shall not be located on any:

a. turfgrass slopes exceeding a slope of three horizontal feet to one vertical foot (3:1), and

b. turfgrass portions of median strips less than eight (8') feet width.

2. Systems in landscape strips less than five feet in width shall be designed to ensure that overspray and/or runoff does not occur by use of system design options such as low volume emitters or microspray systems.

3. Systems shall be designed to be consistent with the requirements of the hydrozone in which they are located.

4. Systems shall be designed with the minimum average irrigation efficiency of 0.625 for spry type and .0.925 for low volume, low pressure emitter type systems.

5. The use of automatic shutoff or override capabilities using rain shutoffs or moisture sensors is encouraged.

6. Systems shall utilize a master control valve connected to an automatic controller.

7. Systems shall make provisions for winterization either by providing:

a. manual drains (automatic drain valves are not permitted at all low points), or

b. means to blow out lines with pressurized air.

8. Separate valves shall be used to irrigate plants with differing water needs.

9. Sprinkler heads with consistent application rates shall be selected for proper area coverage, operating pressure, and adjustment capability.

21A.16.340 Water use - Irrigation system design, design review and audit at installation. A. Irrigation plan design shall be certified by an Irrigation Association (IA)-certified designer or a registered landscape architect or professional engineer with irrigation design experience.

B. The irrigation system must be audited and accepted at installation by an IA-certified irrigation auditor.

21A.16.350 Water use - Irrigation design plan contents. Proposed irrigation system design plans shall be drawn on the same base project map as the landscape plan and shall identify:

A. Location and size of any proposed separate water meters for the landscape serving commercial, multifamily,school,church or recreation land uses only;

B. Location, type, and size of all components of the irrigation system;

C. Static water pressure at the point of connection to the water supply; and

D. Flow rate (gallons per minute), application rates (inches per hour), and design operating pressure (PSI) for each station.

E. Cross connection prevention and/or backflow prevention device in accordance with state standards.

21A.16.360 Water use - Irrigation schedules. Irrigation schedules consistent with the following shall be submitted:

A. A recommended irrigation program with monthly irrigation schedules based, at a minimum on average monthly Eto, shall be required for before and after establishment.

B. The irrigation schedule shall:

1. Include for each station the run time (in minutes per cycle) and cycles per week,

2. Indicate the amount of applied water (in the applicable billing unit used by a purveyor),

3. Incorporate use of evapotranspiration data reflecting local microclimates,
4. Be adjusted for additional water need in recreational areas,
5. Incorporate additional operating criteria such as avoiding irrigation at times of high temperatures or winds.

21A.16.370 Water use - Irrigation system maintenance. Irrigation systems shall be maintained and inspected periodically to assure proper functioning and in compliance with the calculated water budget for the system. Replacement of components shall be of originally specified parts or materials, or their equivalents. (

Chapter 21A.20
DEVELOPMENT STANDARDS - SIGNS

Sections:

21A.20.010 Purpose.
21A.20.020 Permit requirements.
21A.20.030 Exempt signs.
21A.20.040 Prohibited signs.
21A.20.050 Sign area calculation.
21A.20.060 General sign requirements.
21A.20.065 Community bulletin board signs.
21A.20.070 Not Used
21A.20.080 Residential zone signs.
21A.20.090 Office zone signs.
21A.20.095 Neighborhood business zone signs.
21A.20.100 Community business and industrial zone signs.
21A.20.110 Regional business zone signs.
21A.20.120 Signs or displays of limited duration.
21A.20.130 Not Used.
21A.20.140 Not Used.
21A.20.150 Not Used.
21A.20.160 Not Used.
21A.20.170 Not Used.
21A.20.180 Not Used.
21A.20.190 Not Used.

21A.20.010 Purpose. The purpose of this chapter is to enhance the visual environment of the county by:

A. Establishing standards that regulate the type, number, location, size, and lighting of signs;

B. Recognizing the private purposes of signs for the identification of businesses and promotion of products and services; and

C. Recognizing the public purposes of signs which includes considerations of traffic safety, economic and aesthetic welfare.

21A.20.020 Permit requirements. A. Except as otherwise permitted by this chapter, no sign shall be erected, altered or relocated without approval by the City.

B. No building permit shall be required for repainting, cleaning, or other normal maintenance and repair of a sign, or for sign face and copy changes that do not alter the size or structure of the sign.

21A.20.030 Exempt signs. The following signs or displays are exempted from the regulations under this chapter:

A. Historic site markers or plaques, gravestones, and address numbers;

B. Signs required by law, including but not limited to:

1. Official or legal notices issued and posted by any public agency or court; or
2. Traffic directional or warning signs.

C. Plaques, tablets or inscriptions indicating the name of a building, date of erection, or other commemorative information, which are an integral part of the building structure or are attached flat to the face of the

building, which are nonilluminated, and which do not exceed four square feet in surface area;

D. Incidental signs, which shall not exceed two square feet in surface area, provided that said size limitation shall not apply to signs providing directions, warnings or information when established and maintained by a public agency;

E. State or Federal flags;

F. Religious symbols; and

G. The flag of a commercial institution, provided no more than one flag is permitted per business premises, and further provided the flag does not exceed 20 square feet in surface area.

21A.20.040 Prohibited signs. Except as indicated by this chapter, the following signs or displays are prohibited:

A. Portable signs including, but not limited to, sandwich/A-frame signs and mobile readerboard signs, and excluding signs permitted under ISDC 21A.20.120;

B. Private signs on utility poles;

C. Signs which, by reason of their size, location, movement, content, coloring or manner of illumination may be confused with traffic control signs or signals;

D. Signs located in the public right-of-way, except where permitted in this chapter; and

E. Posters, pennants, string of lights, blinking lights, balloons, searchlights and other displays of a carnival nature; except as architectural features, or on a limited basis as seasonal decorations or as provided for in Section 21A.20.120 as grand opening displays;

F. Changing message center signs, where the message changes more frequently then every three minutes; and

G. Billboards.

21A.20.050 Sign area calculation. A. Sign area for non-monument free-standing signs shall be calculated by determining the total surface area of the sign as viewed from any single vantage point, excluding support structures.

B. Sign area for letters or symbols painted or mounted directly on walls or monument signs or on the sloping portion of a roof shall be calculated by measuring the smallest single rectangle which will enclose the combined letters and symbols.

C. Sign area for signs contained entirely within a cabinet and mounted on a wall, roof or monument shall be calculated by measuring the entire area of the cabinet.

21A.20.060 General sign requirements. A. All signs, except billboards, community bulletin boards, community identification signs, political signs, real estate signs and special event signs shall be on-premise signs; provided that uses located on lots without public street frontage in business, office and industrial zones may have one off-premise directional sign of no more than sixteen square feet.

B. Fuel price signs shall not be included in sign area or number limitations of ISDC 21A.20.090-.110, provided such signs do not exceed twenty square feet per street frontage.

C. Projecting and awning signs and signs mounted on the sloping portion of roofs shall not be permitted for uses in the Residential zones. In other zones, projecting and awning signs and signs mounted on the sloping portion of roofs may be used in lieu of wall signs, provided:

1. They maintain a minimum clearance of eight feet above finished grade;

2. They do not project more than six feet perpendicular from the supporting building facade;

3. They meet the standards of ISDC 21A.20.060J. if mounted on the roof of a building; and

4. They shall not exceed the number or size permitted for wall signs in a zone.

D. Changing message center signs, and time and temperature signs, which can be a wall or freestanding sign, shall not exceed the size permitted for a wall or freestanding sign, and shall be permitted only in the NB, CB, RB, O, and I zones. Changing message center signs and time and temperature signs shall not exceed the maximum sign height permitted in the zone.

E. Directional signs shall not be included in the sign area or number limitation of ISDC 21A.20.080 -.110, provided they shall not exceed six square feet in surface area and are limited to one for each entrance or exit to surface parking areas or parking structure.

F. Sign illumination and glare:

1. All signs in the NB, CB, , or O, zone districts may be illuminated. Signs in all other zones may be indirectly illuminated, provided the light source for indirectly illuminated signs shall be no farther away from the sign than the height of the sign;

2. Indirectly illuminated signs shall be arranged so that no direct rays of light are projected from such artificial source into residences or any street right-of-way.

3. Electrical requirements for signs shall be governed by Chapter 19.28 RCW and Chapter 296-46-910 of the Washington Administrative Code; and

4. Signs with an on/off operation shall be permitted only in the CB, zone.

G. Maximum height for wall signs shall not extend above the highest exterior wall or structure upon which the sign is located.

H. Maximum height for projecting signs shall not extend above the highest exterior wall upon which the projecting sign is located.

I. Maximum height for awning signs shall not extend above the height of the awning upon which the awning sign is located.

J. Any sign attached to the sloping surface of a roof shall be installed or erected in such a manner that there are no visible support structures, shall appear to be part of the building itself, and shall not extend above the roof ridge line of the portion of the roof upon which the sign is attached.

K. Except as otherwise permitted by this chapter, off-premise directional signs shall not exceed four square feet in sign area.

L. Mixed use developments in the NB, CB, or O zones are permitted one permanent residential identification sign not exceeding thirty-two square feet in addition to the maximum sign area requirements in the zone where the mixed use development is located.

21A.20.065 Community bulletin board signs. A. One community bulletin board sign is permitted within each community plan designated activity center with the following limitations:

B. In the R, zone community bulletin board signs may not exceed 32 square feet and are only permitted at public schools, police stations, fire stations or other public facilities;

C. In the O and NB zones community bulletin board signs may not exceed 40 square feet;

D. In the CB zone community bulletin board signs may not exceed 60 square feet; and

E. Not Used.

21A.20.070 Not Used.

21A.20.080 Residential zone signs. Signs in the R zone are limited as follows:

A. Nonresidential use:

1. One sign identifying nonresidential uses, not exceeding 25 square feet and not exceeding 6 feet in height is permitted;

2. Schools are permitted one sign per school or school facility entrance, which may be located in the setback. Two additional wall signs attached directly to the school or school facility are permitted;

3. Home occupation and home industry signs are limited to wall signs not exceeding six square feet.

B. Residential use:

1. One residential identification sign not exceeding two square feet is permitted; and

2. One permanent residential development identification sign not exceeding 32 square feet is permitted per development. The maximum height for the sign shall be 6 feet. The sign may be freestanding or mounted on a wall, fence, or other structure.

21A.20.090 Office zone signs. Signs in the O zones shall be limited as follows:

A. Wall signs are permitted, provided they do not total an area more than 10 percent of the building facade on which they are located and provided they are limited to building facades with street frontage.

B. Freestanding signs:

1. One freestanding sign not exceeding 50 square feet is permitted for each street frontage of the lot, provided corner lots with a street frontage of less than 100 feet on each street shall be permitted only one freestanding sign;

2. On lots where more than one freestanding sign is permitted, the sign area permitted for individual freestanding signs may be combined; provided the combined sign does not exceed 80 square feet; and

3. The maximum height for freestanding signs shall be 15 feet.

21A.20.095 Neighborhood business zone signs. Signs in the NB zones shall be limited as follows:

A. Wall signs are permitted, provided they do not total an area more than 10 percent of the building facade on which they are located;

B. Freestanding signs:

1. One freestanding sign not exceeding 50 square feet is permitted for each street frontage of the lot, provided corner lots with a street frontage of less than 100 feet on each street shall be permitted only one freestanding sign;

2. Multiple tenant developments that have more than 300 feet of street frontage on one street may have one additional freestanding sign for each 300 feet of street frontage, or portion thereof. Such signs shall be separated from one another by a minimum of 150 feet, if located on the same street frontage;

3. On lots where more than one freestanding sign is permitted, the sign area permitted for individual freestanding signs may be combined; provided the combined sign does not exceed 150 square feet; and

4. The maximum height for freestanding signs shall be 15 feet.

21A.20.100 Community business zone signs. Signs in the CB zone shall be limited as follows:

A. Wall signs are permitted, provided they do not total an area more than 15 percent of the building facade on which they are located;

B. Freestanding signs:

1. One freestanding sign not exceeding 85 square feet, plus an additional 20 square feet for each additional business in a multiple tenant structure but not to exceed 145 square feet total, is permitted for each street frontage of the lot, provided corner lots with a street frontage of less than 100 feet on each street shall be permitted only one freestanding sign;

2. Multiple tenant developments that have more than 300 feet of street frontage on one street may have one additional freestanding sign for each 300 feet of street frontage, or portion thereof. Such signs shall be separated from one another by a minimum of 150 feet, if located on the same street frontage;

3. On lots where more than one freestanding sign is permitted, the sign area permitted for individual freestanding signs may be combined provided the combined sign area does not exceed 250 square feet; and

4. The maximum height for freestanding signs shall be 20 feet.

21A.20.110 Not Used.

21A.20.120 Signs or displays of limited duration. The following temporary signs or displays are permitted and except as required by the Uniform Building Code, or as otherwise permitted in this chapter, do not require building permits:

A. Grand opening displays:

1. Signs, posters, pennants, strings of lights, blinking lights, balloons and searchlights are permitted for a period of up to one month to announce the opening of a new enterprise or the opening of an enterprise under new management; and

2. All grand opening displays shall be removed upon the expiration of 30 consecutive days;

B. Construction signs:

1. Construction signs identifying architects, engineers, planners, contractors or other individuals or firms involved with the construction of a building and announcing the character of the building or the purpose for which the building is intended may be displayed;

2. One nonilluminated, double-faced sign is permitted for each public street upon which the project fronts;

3. No sign shall exceed 32 square feet in surface area or ten feet in height, or be located closer than 30 feet from the property line of the adjoining property; and

4. Construction signs must be removed by the date of first occupancy of the premises or one year after placement of the sign, whichever occurs first;

C. Political Signs:

1. Signs, posters or bills promoting or publicizing candidates for public office or issues that are to be voted upon in a general or special election may be displayed on private property with the consent of the property owner. Any such sign, poster or bill shall be removed within ten days following the election; and

2. A political sign, poster, bill or other advertising device may be located on public property or within public easements or street rights-of-way, provided that they do not obstruct sight distances as prescribed in the City's street standards.;

D. Real estate signs. All temporary real estate signs may be single or double-faced signs:

1. Signs advertising an individual residential unit for sale or rent shall be limited to one sign per street frontage. The sign may not exceed eight square feet in area, and shall not exceed six feet in height. The sign shall be removed within five days after closing of the sale, lease or rental of the property.

2. Portable off-premise residential directional signs announcing directions to an open house at a specified residence which is offered for sale or rent shall not exceed six square feet in area for each sign, and shall not exceed 42 inches in height. Such signs shall be permitted only when the agent or seller is in attendance at the property for sale or rent and may be located on the right-of-way outside of vehicular and bicycle lanes.

3. On-site commercial or industrial property for sale or rent signs shall be limited to one sign per street frontage, and shall not exceed 32 square feet in area. The sign shall not exceed 12 feet in height. The sign shall be removed within 30 days after closing of the sale, lease or rental of the property. A building permit is required and shall be issued for a one year period. The permit is renewable for one year increments up to a maximum of three years.

4. On-site residential development for sale or rent signs shall be limited to one sign per development. The sign shall not exceed 32 square feet in area, and shall not exceed 12 feet in height. A building permit is required and shall be issued for a one year period. The permit is renewable annually for up to a maximum of three years.

5. Off-site directional signs for residential developments shall be limited to six signs. Each sign shall not exceed 16 square feet in area, and shall include only the name of and directions to the residential development. The sign(s) shall be placed a maximum of two road miles from the nearest residential development entrance. No two signs for one residential development shall be located closer than 500 feet from one another on the same street. A single building permit is required for all signs and shall be issued for a one year period. The permit number and the permit expiration date must be clearly displayed on the face of each sign. The permit is renewable for one year increments up to a maximum of three years, provided that extensions will only be granted if the sign permit applicant has complied with the applicable regulations.

6. Residential on-premise informational signs shall be limited to one sign per feature, including but not limited to signs for information centers, model homes, parking areas or announcing features such as parks, playgrounds, or trails. Each sign shall not exceed 16 square feet in area, and shall not exceed six feet in height.

E. Community event signs:

1. Community event signs shall be limited to announcing or promoting a non-profit sponsored community fair, festival or event;

2. Community event signs may be displayed no more than the time period specified in the temporary use permit issued pursuant to ISDC 21A.44; and

3. Community event signs shall be removed by the event sponsor within two weeks following the end of the community fair, festival or event. (Ord. 11621 § 66, 1994: 10870 § 432, 1993).

21A.20.130 Not Used.

21A.20.140 Not Used.
21A.20.150 Not Used. 21A.20.160
Not Used.

21A.20.170 Not Used.
21A.20.180

Not Used. 21A.20.190 Not Used.

Chapter 21A.24
ENVIRONMENTALLY SENSITIVE AREAS

Sections:

21A.24.010 Purpose.
21A.24.020 Applicability.
21A.24.030 Appeals.
21A.24.040 Sensitive areas rules.
21A.24.050 Complete exemptions.
21A.24.060 Partial exemptions.
21A.24.070 Exceptions.
21A.24.075 Modification or waiver of sensitive area requirements - urban lots.
21A.24.080 Sensitive area maps and inventories.
21A.24.090 Disclosure by applicant.
21A.24.100 Sensitive area review.
21A.24.110 Sensitive area special study requirement.
21A.24.120 Contents of sensitive area special study.
21A.24.130 Mitigation, maintenance, monitoring and contingency.
21A.24.140 Financial guarantees.
21A.24.150 Vegetation management plan.
21A.24.160 Sensitive area markers and signs.
21A.24.170 Notice on title.
21A.24.180 Sensitive area tracts and designations on site plans.
21A.24.190 Alteration.
21A.24.200 Building setbacks.
21A.24.210 Not Used.
21A.24.220 Erosion hazard areas: Development standards and permitted alterations.
21A.24.230 Flood hazard areas: Components.
21A.24.240 Not Used.
21A.24.250 Not Used.
21A.24.260 FEMA floodway: Development standards and permitted alterations.
21A.24.270 Flood hazard areas: Certification by engineer or surveyor.
21A.24.275 Channel relocation and stream meander areas.
21A.24.280 Landslide hazard areas: Development standards and permitted alterations.
21A.24.290 Seismic hazard areas: Development standards and permitted alterations.
21A.24.300 Not Used.
21A.24.310 Steep slope hazard areas: Development standards and permitted alterations.
21A.24.320 Wetlands: Development standards.
21A.24.330 Wetlands: Permitted alterations.
21A.24.340 Wetlands: Mitigation requirements.
21A.24.345 Wetlands: Mitigation banking.
21A.24.350 Wetlands: Limited exemption.
21A.24.360 Streams: Development standards.
21A.24.370 Streams: Permitted alterations.
21A.24.380 Streams: Mitigation requirements.

21A.24.390 Sensitive areas mitigation fee - Creation of fund.
21A.24.400 Sensitive areas mitigation fee - Source of funds.
21A.24.410 Sensitive areas mitigation fee - Use of funds.
21A.24.420 Sensitive areas mitigation fee - Investment of funds.

21A.24.010 Purpose. The purpose of this chapter is to implement the goals and policies of the Washington State Environmental Policy Act, RCW 43.21C, and the City of Sammamish Interim Comprehensive Plan which call for protection of the natural environment and the public health and safety by:

A.Establishing development standards to protect defined sensitive areas;

B.Protecting members of the public and public resources and facilities from injury, loss of life, property damage or financial loss due to flooding, erosion, avalanche, landslides, seismic events, soil subsidence or steep slope failures;

C.Protecting unique, fragile and valuable elements of the environment including, but not limited to, wildlife and its habitat;

D.Requiring mitigation of unavoidable impacts on environmentally sensitive areas by regulating alterations in or near sensitive areas;

E.Preventing cumulative adverse environmental impacts on water availability, water quality, ground water, wetlands and streams;

F. Measuring the quantity and quality of wetland and stream resources and preventing overall net loss of wetland and stream functions;

G.Protecting the public trust as to navigable waters and aquatic resources;

H.Meeting the requirements of the National Flood Insurance Program and maintaining the City as an eligible community for federal flood insurance benefits;

I. Alerting members of the public including, but not limited to, appraisers, owners, potential buyers or lessees to the development limitations of sensitive areas; and

J. Providing City officials with sufficient information to protect sensitive areas.

21A.24.020 Applicability. A. The provisions of this chapter shall apply to all land uses in City of Sammamish, and all persons within the City shall comply with the requirements of this chapter.

B.The City shall not approve any permit or otherwise issue any authorization to alter the condition of any land, water or vegetation or to construct or alter any structure or improvement without first assuring compliance with the requirements of this chapter.

C.Approval of a development proposal pursuant to the provisions of this chapter does not discharge the obligation of the applicant to comply with the provisions of this chapter.

D.When any provision of any other chapter of the Sammamish City Code conflicts with this chapter or when the provisions of this chapter are in conflict, that provision which provides more protection to environmentally sensitive areas shall apply unless specifically provided otherwise in this chapter or unless such provision conflicts with federal or state laws or regulations.

E.The provisions of this chapter shall apply to all forest practices over which the City has jurisdiction pursuant to RCW 76.09 and WAC 222.

21A.24.030 Appeals. Any decision to approve, condition or deny a development proposal based on the requirements of ISDC 21A.24 may be appealed according to and as part of the appeal procedure for the permit or approval involved.

21A.24.040 Sensitive areas rules. Applicable Departments within the City are authorized to adopt, pursuant to ISDC 2.98, such administrative rules and regulations as are necessary and appropriate to implement ISDC 21A.24 and to prepare and require the use of such forms as are necessary to its administration.

21A.24.050 Complete exemptions. The following are exempt from the provisions of this chapter and any administrative rules promulgated thereunder:

A. Alterations in response to emergencies which threaten the public health, safety and welfare or which pose an imminent risk of damage to private property as long as any alteration undertaken pursuant to this subsection is reported to the Department immediately. The Director shall confirm that an emergency exists and determine what, if any, mitigation shall be required to protect the health, safety, welfare and environment and to repair any resource damage;

B. Not Used.

C. Public water, electric and natural gas distribution, public sewer collection, cable communications, telephone utility and related activities undertaken pursuant to City-approved best management practices, as follows:

1. Normal and routine maintenance or repair of existing utility structures or rights-of-way;

2. Relocation of electric facilities, lines, equipment or appurtenances, not including substations, with an associated voltage of fifty-five thousand volts or less, only when required by a local governmental agency which approves the new location of the facilities;

3. Replacement, operation, repair, modification, installation or construction in existing developed utility corridors, an improved county road right-of-way or county-authorized private roadway of all electric facilities, lines, equipment or appurtenances, not including substations;

4. Relocation of public sewer local collection, public water local distribution, natural gas, cable communication or telephone facilities, lines, pipes, mains, equipment or appurtenances, only when required by a local governmental agency which approves the new location of the facilities;

5. Replacement, operation, repair, modification, installation or construction of public sewer local collection, public water local distribution, natural gas, cable communication or telephone facilities, lines, pipes, mains, equipment or appurtenances when such facilities are located within an improved public right-of-way or authorized private roadway;

D.Maintenance, operation, repair, modification or replacement of publicly improved roadways as long as any such alteration does not involve the expansion of roadways or related improvements into previously unimproved rights-of-way or portions of rights-of-way;

E.Maintenance, operation or repair of publicly improved recreation areas as long as any such alteration does not involve the expansion of improvements into previously unimproved recreation areas;

F. Not Used.

G. All clearing and grading activities which are exempt from the requirement for a clearing and grading permit as specified in ISDC 16.82.050, unless these activities require other permits or authorizations as specified in ISDC 21A.24.020.

H.

Not Used.

21A.24.060 Partial exemptions. A. The following are exempt from the provisions of this chapter and any administrative rules promulgated thereunder, except for the notice on title provisions, ISDC 21A.24.170 - 21A.24.180, and the flood hazard area provisions, ISDC 21A.24.230 - 21A.24.270:

1. Structural modification of, addition to or replacement of structures, except single detached residences, in existence before November 27, 1990 which do not meet the building setback or buffer requirements for wetlands, streams or steep slope hazard areas if the modification, addition, replacement or related activity does not increase the existing footprint of the structure lying within the above-described building setback area, sensitive area or buffer;

2. Structural modification of, addition to or replacement of single detached residences in existence before November 27, 1990 which do not meet the building setback or buffer requirements for wetlands, streams or steep slope hazard areas if the modification, addition, replacement or related activity does not increase the existing footprint of the residence lying within the above-described buffer or building setback area by more than 1000 square feet over that existing before November 27, 1990 and no portion of the modification, addition or replacement is located closer to the sensitive area or, if the existing residence is in the sensitive area, extends farther into the sensitive area; and

3. Maintenance or repair of structures which do not meet the development standards of this chapter for landslide, seismic hazard areas if the maintenance or repair does not increase the footprint of the structure and there is no increased risk to life or property as a result of the proposed maintenance or repair;

B.The grazing of livestock is exempt from the provisions of this chapter and any administrative rules promulgated thereunder, except for the livestock restriction provisions, ISDC 21A.24.320 and 21A.24.360, and any animal density limitations established by law, if the grazing activity was in existence before November 27, 1990;

C.A permit or approval sought as part of a development proposal for which multiple permits are required is exempt from the provisions of this chapter and any administrative rules promulgated thereunder, except for the notice on title provisions, ISDC 21A.24.170 - 21A.24.180, if:

1. The City previously reviewed all sensitive areas on the site;

2. There is no material change in the development proposal since the prior review;

3. There is no new information available which is important to any sensitive area review of the site or particular sensitive area;

4. The permit or approval under which the prior review was conducted has not expired or, if no expiration date, no more than five years lapsed since the issuance of that permit or approval; and

5. The prior permit or approval, including any conditions, has been complied with.

21A.24.070 Exceptions. A. If the application of this chapter would prohibit a development proposal by a public agency and utility, the agency or utility may apply for an exception pursuant to this subsection:

1. The public agency or utility shall apply to the Department and shall make available to the Department other related project documents such as permit applications to other agencies, special studies and SEPA documents.

2. The Department shall review the application based on the following criteria:

a. there is no other practical alternative to the proposed development with less impact on the sensitive area; and

b. the proposal minimizes the impact on sensitive areas.

3. The Department shall process exceptions, provide public notice, and provide opportunity for the public to request a public hearing, and provide an appeal process consistent with the provisions of ISDC 20.20.

4. This exception shall not allow the use of the following sensitive areas for regional stormwater management facilities except where there is a clear showing that the facility will protect public health and safety or repair damaged natural resources:

a. class 1 streams or buffers;

b. class 1 wetlands or buffers with plant associations of infrequent occurrence; or

c. class 1 or 2 wetlands or buffers which provide critical or outstanding habitat for herons, raptors or state or federal designated endangered or threatened species unless clearly demonstrated by the applicant that there will be no impact on such habitat.

B.If the application of this chapter would deny all reasonable use of the property, the applicant may apply for an exception pursuant to this subsection:

1. The applicant may apply for a reasonable use exception without first having applied for a variance if the requested exception includes relief from standards for which a variance cannot be granted pursuant to the provisions of ISDC chapter 21A.44. The applicant shall apply to the Department, and the Department shall make a final decision based on the following criteria:

a. the application of this chapter would deny all reasonable use of the property;

b. there is no other reasonable use with less impact on the sensitive area;

c. the proposed development does not pose an unreasonable threat to the public health, safety or welfare on or off the development proposal site and is consistent with the general purposes of this chapter and the public interest; and

d. any alterations permitted to the sensitive area shall be the minimum necessary to allow for reasonable use of the property; and any authorized alteration of a sensitive area under this subsection shall be subject to conditions established by the Department including, but not limited to, mitigation under an approved mitigation plan.

21A.24.075 Modification or waiver of sensitive area requirements-- urban lots. The purpose of this section is to provide an alternative to the variance, and exception processes for minor development. A further purpose of this section is to minimize

impacts to sensitive areas by allowing minor modifications of the zoning code which allow single family residences on existing, legal urban lots without requiring a variance or exception. The Director shall have the discretion to modify or waive some or all of the requirements of this title, including mitigation requirements, pertaining to class 3 wetlands, class 3 streams, and their associated buffers or building setback areas in accordance with the provisions of this section.

A. An applicant may request a modification or waiver of sensitive area requirements pursuant to this section provided the lot or lots are located in an urban area designated in the King County Comprehensive Plan; and

B. The applicant for the modification or waiver of sensitive area requirements shall submit any sensitive area special studies following a preapplication review meeting as required under ISDC 21A.24.110 as well as such other documents, studies, as requested by the Director.

C. The Director may grant a modification or waiver of sensitive area requirements provided:

1. The proposal is the minimum necessary to accommodate the building footprint and access. In no case, however, shall the building footprint exceed 5000 square feet, including access,

2. Access is located so as to have the least impact on the sensitive area and its buffer,

3. The proposal preserves the functions and values of wetlands and streams to the maximum extent possible,

4. Adverse impacts resulting from alterations of steep slopes are minimized,

5. The proposal includes on-site mitigation to the maximum extent possible,

6. The proposal will not significantly affect drainage capabilities, flood potential, and steep slopes and landslide hazards either on neighboring properties or on the proposal itself; and

7. The proposal first develops nonsensitive area land, then the sensitive area buffer before the sensitive area itself is developed.

The Director may require on-site or off-site mitigation measures to compensate for the loss of the functions and values of the sensitive areas and may impose mitigating conditions to the modification or waiver in order to meet the standards of this subsection C.

D. Where a modification or waiver of sensitive area requirements under this section is proposed, the Director shall give written mailed notice of the proposed modification or waiver to all owners of property located within five hundred feet of any boundary of the subject property and to the water and land resources division and shall allow fifteen calendar days for comment before making a decision. The decision of the Director regarding the modification or waiver shall be mailed to the applicant and to any other person who requests a copy. The decision shall state the reasons for denial or any required mitigation or other conditions imposed. The decision of the Director regarding the modification or waiver may be appealed per ISDC 21A.24.030.

E. This section shall not apply to the following steep slope hazard areas:

1. Steep slope hazard areas that are unmitigatable landslide hazard areas; and

2. Steep slope hazard areas of slope greater than forty percent where either the lot or slope are abutting and above a class 1 or 2 wetland stream, and associated buffer, or an open stormwater conveyance system.

21A.24.080 Sensitive area maps and inventories. A. The distribution of many environmentally sensitive areas in western King County is displayed on maps in the Sensitive Areas Map Folio. Many of the wetlands are inventoried and rated and that information is published in the King County Wetlands Inventory Notebooks. Many flood hazard areas are mapped by the Federal Insurance Administration in a scientific and engineering report entitled "The Flood Insurance Study for King County." If there is a conflict among the maps, inventory and site-specific features, the Department of development and environmental services shall verify the actual presence or absence of the features defined in this title as sensitive areas. The determination may be challenged by the property owner. 21A.24.090 Disclosure by applicant. A. The applicant shall disclose to the City the presence of sensitive areas on the development proposal site and any mapped or identifiable sensitive areas within 100 feet of the applicant's property.

B. If the development proposal site contains or is within a sensitive area, the applicant shall submit an affidavit which declares whether the applicant has knowledge of any illegal alteration to any or all sensitive areas on the development proposal site and whether the applicant previously has been found in violation of this chapter, pursuant to ISDC Title 23. If the applicant previously has been found in violation, the applicant shall declare whether such violation has been corrected to the satisfaction of the City.

21A.24.100 Sensitive area review. A. The City shall perform a sensitive area review for any City development proposal permit application or other request for permission to proceed with an alteration on a site which includes a sensitive area or is within an identified sensitive area buffer or building setback area.

B. As part of the sensitive area review, The City shall:

1. Determine whether any sensitive area exists on the property and confirm its nature and type;

2. Determine whether a sensitive area special study is required;

3. Evaluate the sensitive area special study;

4. Determine whether the development proposal is consistent with this chapter;

5. Determine whether any proposed alteration to the sensitive area is necessary; and

6. Determine if the mitigation and monitoring plans and bonding measures proposed by the applicant are sufficient to protect the public health, safety and welfare, consistent with the goals, purposes, objectives and requirements of this chapter

21A.24.110 Sensitive area special study requirement. A. An applicant for a development proposal which includes a sensitive area or is within an identified sensitive area buffer shall submit a sensitive area special study to adequately evaluate the proposal and all probable impacts.

B. The Director may waive the requirement for a special study if the applicant shows, to the Director's satisfaction, that:

1. There will be no alteration of the sensitive area or buffer;

2. The development proposal will not have an impact on the sensitive area in a manner contrary to the goals, purposes, objectives and requirements of this chapter; and

3. The minimum standards required by this chapter are met.

C. If necessary to insure compliance with this chapter, the Director may require additional information from the applicant, separate from the special study.

21A.24.120 Contents of sensitive area special study. A. The sensitive area special study shall be in the form of a written report and shall contain the following, as applicable:

1. Identification and characterization of all sensitive areas on or encompassing the development proposal site;

2. Assessment of the impacts of any alteration proposed for a sensitive area or buffer, assessment of the impacts of any alteration on the development proposal, other properties and the environment, and/or assessment of the impacts to the development proposal resulting from development in the sensitive area or buffer;

3. Studies which propose adequate mitigation, maintenance, monitoring and contingency plans and bonding measures;

4. A scale map of the development proposal site; and

5. Detailed studies, as required by King County.

B. A sensitive area special study may be combined with any studies required by other laws and regulations; and

C. If the development proposal will affect only a part of the development proposal site, the Director may limit the scope of the required special study to include only that part of the site which may be affected by the development. (Ord. 10870 § 459, 1993).

21A.24.130 Mitigation, maintenance, monitoring and contingency. A. As determined by King County, mitigation, maintenance and monitoring measures shall be in place to protect sensitive areas and buffers from alterations occurring on the development proposal site.

B. Where monitoring reveals a significant deviation from predicted impacts or a failure of mitigation or maintenance measures, the applicant shall be responsible for appropriate corrective action which, when approved, shall be subject to further monitoring.

21A.24.140 Financial guarantees. Financial guarantees shall be required consistent with the provisions of Title 27A.

21A.24.150 Vegetation management plan. A. For all development proposals where preservation of existing vegetation is required by this chapter, a vegetation management plan shall be submitted and approved prior to issuance of the permit or other request for permission to proceed with an alteration.

B. The vegetation management plan shall identify the proposed clearing limits for the project and any areas where vegetation in a sensitive area or its buffer is proposed to be disturbed.

C. Where clearing includes cutting any merchantable stand of timber, as defined in WAC 222-16-010(28), the vegetation management plan shall include a description of proposed logging practices which demonstrates how all sensitive areas will be protected in accordance with the provisions of this chapter.

D. Clearing limits as shown on the plan shall be marked in the field in a prominent and durable manner. Proposed methods of field marking shall be reviewed and approved by the City prior to any site alteration. Field marking shall remain in place until the certificate of occupancy or final project approval is granted.

E. The vegetation management plan may be incorporated into a temporary erosion and sediment control plan or landscaping plan where either of these plans is required by other laws or regulations.

F. Submittal requirements for vegetation management plans shall be set forth in administrative rules. 21A.24.160 Sensitive area markers and signs. A. Permanent survey stakes delineating the boundary between adjoining property and sensitive area tracts shall be set, using iron or concrete markers as established by current survey standards.

B. The boundary between a sensitive area tract and contiguous land shall be identified with permanent signs.

21A.24.170 Notice on title. A. The owner of any property containing sensitive areas or buffers on which a development proposal is submitted, except a public right-of-way or the site of a permanent public facility, shall file a notice approved by the City with the records and elections division.

The required contents and form of the notice shall be set forth in administrative rules. The notice shall inform the public of the presence of sensitive areas or buffers on the property, of the application of this chapter to the property and that limitations on actions in or affecting such sensitive areas or buffers may exist. The notice shall run with the land.

B. The applicant shall submit proof that the notice has been filed for public record before the City shall approve any development proposal for the property or, in the case of subdivisions, short subdivisions and binding site plans, at or before recording.

21A.24.180 Sensitive area tracts and designations on site plans. A. Sensitive area tracts shall be used to delineate and protect those sensitive areas and buffers listed below in development proposals for subdivisions, short subdivisions or binding site plans and shall be recorded on all documents of title of record for all affected lots:

1. All landslide hazard areas and buffers which are one acre or greater in size;
2. All steep slope hazard areas and buffers which are one acre or greater in size;
3. All wetlands and buffers; and
4. All streams and buffers.

B. Any required sensitive area tract shall be held in an undivided interest by each owner of a building lot within the development with this ownership interest passing with the ownership of the lot or shall be held by an incorporated homeowner's association or other legal entity which assures the ownership, maintenance and protection of the tract, or dedicated to the City of Sammamish, at the City's discretion.

C. Site plans submitted as part of development proposals for building permits, master plan developments and clearing and grading permits shall include and delineate all flood hazard areas, [if they have been mapped by FEMA or King County or if a special study is required] landslide, and steep slope hazard areas, streams and wetlands, buffers and building setbacks. If only a part of the development site has been mapped pursuant to ISDC 21A.24.120 C., the part of the site which has not been mapped shall be clearly identified and labeled on the site plans. The site plans shall be attached to the notice on title required by ISDC 21A.24.170.

21A.24.190 Alteration. Any human activity which results or is likely to result in an impact upon the existing condition of a sensitive area is an alteration which is subject to specific limitations as specified for each sensitive area. Alterations include, but are not limited to, grading, filling, dredging, draining, channelizing, applying herbicides or pesticides or any hazardous substance, discharging pollutants except stormwater, grazing domestic animals, paving, constructing, applying gravel, modifying for surface water management purposes, cutting, pruning, topping, trimming, relocating or removing vegetation or any other human activity which results or is likely to result in an impact to existent vegetation, hydrology, wildlife or wildlife habitat. Alterations do not include walking, fishing or any other passive recreation or other similar activities.

21A.24.200 Building setbacks. Unless otherwise provided, buildings and other structures shall be set back a distance of 15 feet from the edges of all sensitive area buffers or from the edges of all sensitive areas, if no buffers are required. The following may be allowed in the building setback area:

A. Landscaping;

B. Uncovered decks;

C. Building overhangs if such overhangs do not extend more than 18 inches into the setback area; and

D.Impervious ground surfaces, such as driveways and patios, provided that such improvements may be subject to special drainage provisions specified in administrative rules adopted for the various sensitive areas.

21A.24.210 review the coal

Not Used.

21A.24.220 Erosion hazard areas: Development standards and permitted alterations.

A. Clearing on an erosion hazard area is allowed only from April 1 to September 1, except that:

1. Up to 15,000 square feet may be cleared on any lot, subject to any other requirement for vegetation retention and subject to any clearing and grading permit required by ISDC 16.82; and

2. Timber harvest may be allowed pursuant to an approved forest practice permit issued by the Washington Department of Natural Resources.

B.All development proposals on sites containing erosion hazard areas shall include a temporary erosion control plan consistent with this section and other laws and regulations prior to receiving approval. Specific requirements for such plans shall be set forth in administrative rules.

C.All subdivisions, short subdivisions or binding site plans on sites with erosion hazard areas shall comply with the following additional requirements:

1. Except as provided in this section, existing vegetation shall be retained on all lots until building permits are approved for development on individual lots;

2. If any vegetation on the lots is damaged or removed during construction of the subdivision infrastructure, the applicant shall be required to submit a restoration plan to the Department for review and approval. Following approval, the applicant shall be required to implement the plan;

3. Clearing of vegetation on lots may be allowed without a separate

clearing and grading permit if the City determines that:

a. such clearing is a necessary part of a large scale grading plan;

b. it is not feasible to perform such grading on an individual lot basis; and

c. drainage from the graded area will meet water quality standards to be established by administrative rules.

D. Where the City determines that erosion from a development site poses a significant risk of damage to downstream receiving waters, based either on the size of the project, the proximity to the receiving water or the sensitivity of the receiving water, the applicant shall be required to provide regular monitoring of surface water discharge from the site. If the project does not meet water quality standards established by law or administrative rules, the City may suspend further development work on the site until such standards are met.

E. The use of hazardous substances, pesticides and fertilizers in erosion hazard areas may be prohibited by the City.

21A.24.230 Flood hazard areas: Components. A. A flood hazard area consists of the following components:

1. Floodplain;
2. Flood fringe;
3. Zero-rise floodway; and
4. Federal Emergency Management Agency ("FEMA") floodway.

B. The City Engineer shall determine the flood hazard area after obtaining, reviewing and utilizing base flood elevations and available floodway data for a flood having a one percent chance of being equaled or exceeded in any given year, often referred to as the "100-year flood." The base flood is determined for existing conditions, unless a basin plan including projected flows under future developed conditions has been completed and adopted by the City, in which case these future flow projections shall be used. In areas where the Flood Insurance Study includes detailed base flood calculations, those calculations may be used until projections of future flows are completed and approved by the City Engineer.

21A.24.240

Not Used.

21A.24.250 Not Used.

21A.24.260 Not Used. 21A.24.270 Flood hazard areas: Certification by engineer or surveyor.

A. For all new structures or substantial improvements in a flood hazard area, the applicant shall provide certification by a professional civil engineer or land surveyor licensed by the State of Washington of:

1. The actual as-built elevation of the lowest floor, including basement; and
2. The actual as-built elevation to which the structure is flood-proofed, if applicable.

B. The engineer or surveyor shall indicate if the structure has a basement.

C.The City shall maintain the certifications required by this section for public inspection.

21A.24.275 Channel relocation and stream meander areas. No structure shall be allowed which would be at risk due to channel relocation or stream meander until the promulgation of a public rule.

21A.24.280 Landslide hazard areas: Development standards and permitted alterations. A development proposal on a site containing a landslide hazard area shall meet the following requirements:

A.A minimum buffer of 50 feet shall be established from all edges of the landslide hazard area. The buffer shall be extended as required to mitigate a steep slope or erosion hazard or as otherwise necessary to protect the public health, safety and welfare. For landslide hazard areas that are also steep slopes over 200 feet in height, the building setback shall be 50 feet from the buffer. The building setback may be reduced to a minimum of 15 feet from the buffer if, based on a special study, King County determines that the reduction will adequately protect the proposed development and the sensitive area. For single family residential building permits only, The Director may waive the special study requirement and authorize building setback reductions, pursuant to ISDC 21A.24.075 or if the Director determines that

the reduction will adequately protect the proposed development and the sensitive area;

B.Unless otherwise provided herein or as part of an approved alteration, removal of any vegetation from a landslide hazard area or buffer shall be prohibited, except for limited removal of vegetation necessary for surveying purposes and for the removal of hazard trees determined to be unsafe according to tree selection rules promulgated pursuant to this chapter. Notice to the City shall be provided prior to any vegetation removal permitted by this subsection;

C.Vegetation on slopes within a landslide hazard area or buffer which has been damaged by human activity or infested by noxious weeds may be replaced with vegetation native to King County pursuant to an enhancement plan approved by the City. The use of hazardous substances, pesticides and fertilizers in landslide hazard areas and their buffers may be prohibited by the City; and

D.Alterations to landslide hazard areas and buffers may be allowed only as follows:

1. A landslide hazard area located on a slope 40% or steeper may be altered only if the alteration meets the standards and limitations set forth for steep slope hazard areas in ISDC 21A.24.310;

2. A landslide hazard area located on a slope less than 40% may be altered only if the alteration meets the following requirements:

a. the development proposal will not decrease slope stability on contiguous properties; and

b. mitigation based on the best available engineering and geological practices is implemented which either eliminates or minimizes the risk of damage, death or injury resulting from landslides; and

3. Neither buffers nor a sensitive area tract shall be required if the alteration meets the standards of subsection D.2.

21A.24.290 Seismic hazard areas: Development standards and permitted alterations. A development proposal on a site containing a seismic hazard area shall meet the following requirements:

A.Unless exempt, development proposals shall be subject to review standards based on two occupancy types: critical facilities and other structures. The review standards for critical facilities shall be based on larger earthquake reoccurrence intervals. The review standards for both occupancy types shall be set forth in administrative rules;

B. Alterations to seismic hazard areas may be allowed only as follows:

1. The evaluation of site-specific subsurface conditions shows that the proposed development site is not located in a seismic hazard area; or

2. Mitigation based on the best available engineering and geological practices is implemented which either eliminates or minimizes the risk of damage, death or injury resulting from seismically induced settlement or soil liquefaction; and

3. Mobile homes may be placed in seismic hazard areas without performing special studies to address the seismic hazard. Such mobile homes may be subject to special support and tie-down requirements. These requirements shall be set forth in administrative rules.

C. Buildings with less than 2500 square feet of floor area or roof area (whichever is greater) that contain no living quarters and that are not used as places of employment or public assembly exempt from the provisions of this section.

21A.24.300

Not Used.

21A.24.310 Steep slope hazard areas: Development standards and permitted alterations. A development proposal on a site containing a steep slope hazard area shall meet the following requirements:

A. A minimum buffer of fifty feet shall be established from the top, toe and along all sides of any slope forty percent or steeper. The buffer shall be extended as required to mitigate a landslide or erosion hazard or as otherwise necessary to protect the public health, safety and welfare. The buffer may be reduced to a minimum of ten feet if, based on a special study, the City determines that the reduction will adequately protect the proposed development and the sensitive area. The buffer may only be reduced to twenty-five feet in the case of erosion hazard areas. For single family residential building permits only, the Director may waive the special study requirement and authorize buffer reductions, pursuant to ISDC 21A.24.075 or if the Director determines that the reduction will adequately protect the proposed development and the sensitive area;

B. Unless otherwise provided herein or as part of an approved alteration, removal of any vegetation from a steep slope hazard area or buffer shall be prohibited, except for limited removal of vegetation necessary for surveying purposes and for the removal of hazard trees determined to be unsafe according to tree selection rules promulgated pursuant to this chapter. Notice to the City shall be provided prior to any vegetation removal permitted by this subsection;

C. Vegetation on steep slopes within steep slope hazard areas or their buffers which has been damaged by human activity or infested by noxious weeds may be replaced with vegetation native to King County pursuant to a vegetation management plan approved by the City. The use of hazardous substances, pesticides and fertilizers in steep slope hazard areas and their buffers may be prohibited by the City;

D. Alterations to steep slope hazard areas and buffers may be allowed only as follows:

1. Approved surface water conveyances, as specified in the Surface Water Design Manual, may be allowed on steep slopes if they are installed in a manner to minimize disturbance to the slope and vegetation;

2. Public and private trails may be allowed on steep slopes as approved by the county. Under no circumstances shall trails be constructed of concrete, asphalt or other

impervious surfaces which will contribute to surface water run-off, unless such construction is necessary for soil stabilization or soil erosion prevention or unless the trail system is specifically designed and intended to be accessible to handicapped persons. Additional requirements for trail construction may be set forth in administrative rules;

3. Utility corridors may be allowed on steep slopes if a special study shows that such alteration will not subject the area to the risk of landslide or erosion;

4. Limited trimming and pruning of vegetation may be allowed on steep slopes pursuant to an approved vegetation management plan for the creation and maintenance of views if the soils are not disturbed and the activity is subject to administrative rules; and

5. Nor Used

6. Stabilization of sites where erosion or landsliding threaten public or private structures, utilities, roads, driveways or trails, or where erosion and landsliding threatens any lake, stream, wetland or shoreline. Stabilization work shall be performed in a manner which causes the least possible disturbance to the slope and its vegetative cover; and

7. Reconstruction, remodeling or replacement of existing structures.

Reconstruction, remodeling, or replacement of an existing structure upon another portion of an existing impervious surface which was established pursuant to City ordinances and regulations may be allowed provided:

a. if within the buffer, the structure is located no closer to the steep slope than the existing structure,

b. the existing impervious surface within the buffer or steep slope is not expanded as a result of the reconstruction or replacement.

E. Point discharges from surface water facilities onto or upstream from steep slope hazard areas that are also erosion hazard areas shall be prohibited except as follows:

1. Conveyed via continuous storm pipe downslope to a point where there are no erosion hazard areas downstream from the discharge;

2. Discharged at flow durations matching predeveloped conditions, with adequate energy dissipation, into existing channels that previously conveyed stormwater runoff in the predevelopment state; or

3. Dispersed discharge upslope of the steep slope onto a low-gradient undisturbed buffer demonstrated to be adequate to infiltrate all surface and stormwater runoff.

F. The following are exempt from the provisions of this section:

1. Slopes which are forty percent or steeper with a vertical elevation change of up to twenty feet if no adverse impact will result from the exemption based on the City's review of and concurrence with a soils report prepared by a geologist or geotechnical engineer; and

2. The approved regrading of any slope which was created through previous legal grading activities. Any slope which remains forty percent or steeper following site development shall be subject to all requirements for steep slopes.

21A.24.320 Wetlands: Development standards. A development proposal on a site containing a wetland shall meet the following requirements:

A. The following minimum buffers shall be established from the wetland edge:

1. A class 1 wetland shall have a 150-foot buffer;

2. A class 2 wetland shall have a 50-foot buffer;

3. A class 3 wetland shall have a 25-foot buffer;

4. Any wetland restored, relocated, replaced or enhanced because of a wetland alteration shall have the minimum buffer required for the highest wetland class involved; and

5. Any wetland within 25 feet of the toe of a slope 30% or steeper, but less than 40%, shall have:

a. the minimum buffer required for the wetland class involved or a 25-foot buffer beyond the top of the slope, whichever is greater, if the horizontal length of the slope including small benches and terraces is within the buffer for that wetland class; or

b. a 25-foot buffer beyond the minimum buffer required for the wetland class involved if the horizontal length of the slope including small benches and terraces extends beyond the buffer for that wetland class;

B. Buffer width averaging may be allowed by the Department if it will provide additional protection to wetlands or enhance their functions, as long as the total area contained in the buffer on the development proposal site does not decrease;

C. Increased buffer widths shall be required by the Department when necessary to protect wetlands. Provisions for additional buffer widths shall be contained in administrative rules promulgated pursuant to this chapter including, but not limited to, provisions pertaining to critical drainage areas, location of hazardous substances, critical fish and wildlife habitat, landslide or erosion hazard areas contiguous to wetlands, groundwater recharge and discharge and the location of trail or utility corridors;

D. The use of hazardous substances, pesticides and fertilizers in the wetland and its buffer may be prohibited by the City;

E. Unless otherwise provided, the following restrictions shall apply to all development proposals which include the introduction of livestock:

1. To prevent damage to class 1 and 2 wetlands:

a. a plan to protect and enhance the wetland's water quality shall be implemented pursuant to 21A.30; or

b. fencing located not closer than the buffer edge shall be required; and

2. Standards pertaining to access to streams for watering purposes, stream crossing requirements and use of natural barriers and vegetative buffering in lieu of fencing shall be included in administrative rules promulgated pursuant to this chapter;

F. The livestock restrictions contained in subsection E. shall not apply to wetlands defined as grazed wet meadows, regardless of their classification.

21A.24.330 Wetlands: Permitted alterations. Alterations to wetlands and buffers may be allowed pursuant to ISDC 21A.24.075 or as follows:

A. Alterations may be permitted if the Department determines, based upon its review of special studies completed by qualified professionals, that:

1. The wetland does not serve any of the valuable functions of wetlands identified in ISDC 21A.06.1415 including, but not limited to, biologic and hydrologic functions; or

2. The proposed development will;

a. protect, restore or enhance the wildlife habitat, natural drainage or other valuable functions of the wetland resulting in a net improvement to the functions of the wetland system;

b. develop a plan for its design, implementation, maintenance and monitoring prepared by a civil engineer and a qualified biologist;

c. perform the restoration or enhancement under the direction of a qualified biologist; and

d. will otherwise be consistent with the purposes of this chapter.

B. To establish the conditions in subsection A., detailed studies may be required as part of the special study on habitat value, hydrology, erosion and deposition and/or water quality. Such detailed studies shall include specific recommendations for mitigation which may be required as a condition of any development proposal approval. The recommendations may include, but are not limited to, construction techniques or design, drainage or density specifications;

C. If a wetland is in a flood hazard area, the applicant shall notify affected communities and native tribes of proposed alterations prior to any alteration and submit evidence of such notification to the Federal Insurance Administration;

D. There shall be no introduction of any plant or wildlife which is not indigenous to King County into any wetland or buffer unless authorized by a state or federal permit or approval;

E. Utilities may be allowed in wetland buffers if:

1. The Director determines that no practical alternative location is available; and

2. The utility corridor meets any additional requirements set forth in administrative rules including, but not limited to, requirements for installation, replacement of vegetation and maintenance;

F. Sewer utility corridors may be allowed in wetland buffers only if:

1. The applicant demonstrates that sewer lines are necessary for gravity flow;

2. The corridor is not located in a wetland or buffer used by species listed as endangered or threatened by the state or federal government or containing critical or outstanding actual habitat for those species or heron rookeries or raptor nesting trees;

3. The corridor alignment including, but not limited to, any allowed maintenance roads follows a path beyond a distance equal to seventy-five of the buffer width from the wetland edge;

4. Corridor construction and maintenance protects the wetland and buffer and is aligned to avoid cutting trees greater than twelve inches in diameter at breast height, when possible, and pesticides, herbicides and other hazardous substances are not used;

5. An additional, contiguous and undisturbed buffer, equal in width to the proposed corridor including any allowed maintenance roads, is provided to protect the wetland;

6. The corridor is revegetated with appropriate vegetation native to King County at pre-construction densities or greater immediately upon completion of construction or as soon thereafter as possible, and the sewer utility ensures that such vegetation survives;

7. Any additional corridor access for maintenance is provided, to the extent possible, at specific points rather than by a parallel road; and

8. The width of any necessary parallel road providing access for maintenance is as small as possible, but not greater than fifteen feet, the road is maintained without the use of herbicides, pesticides or other hazardous substances and the location of the road is contiguous to the utility corridor on the side away from the wetland;

G. Joint use of an approved sewer utility corridor by other utilities may be allowed.

H. The following surface water management activities and facilities may be allowed in wetlands or their buffers only as follows:

1. Surface water discharge to a wetland from a flow control or water quality treatment facility, sediment pond or other surface water management activity or facility may be allowed if the discharge does not increase the rate of flow, change the plant composition in a forested wetland or decrease the water quality of the wetland;

2. A class 1, 2 or 3 wetland or buffer may be used for a regional retention/detention facility if:

a. a public agency and utility exception is granted pursuant to ISDC 21A.24.070;

b. all requirements of the Surface Water Design Manual are met;

c. the use will not alter the rating or the factors used in rating the wetland;

d. the proposal is in compliance with the latest adopted findings of the Puget Sound Wetlands Research Project; and

e. there are no significant adverse impacts to the wetland;

3. Isolated class 3 wetlands and buffers which are grazed wet meadows may be used as a flow control facility if:

a. presettlement pond or water quality treatment is required prior to flow into the wetland, and

b. they are not part of, or immediately adjacent to, an LSRA, RSRA or a designated wildlife habitat corridor and all requirements of the Surface Water Design Manual are met; and

4. Use of a wetland buffer for a surface water management activity or facility, other than a flow control or water quality treatment facility, such as an energy dissipater and associated pipes, may be allowed only if the applicant demonstrates, to the satisfaction of the Department, that:

a. no practicable alternative exists; and

b. the functions of the buffer or the wetland are not adversely affected;

I. Public and private trails may be allowed in wetland buffers only upon adoption of administrative rules consistent with the following:

1. The trail surface shall not be made of impervious materials, except that public multi-purpose trails such as the East Lake Sammamish Trail may be made of impervious materials if they meet all other requirements including water quality; and

2. Buffers shall be expanded, where possible, equal to the width of the trail corridor including disturbed areas;

J. A dock, pier, moorage, float or launch facility may be allowed, subject to the provisions of ISDC Title 25, if:

1. The existing and zoned density around the wetland is three dwelling units per acre or more;

2. At least seventy-five percent of the lots around the wetland have been built upon and no significant buffer or wetland vegetation remains on these lots; and

3. Open water is a significant component of the wetland;

K.Alterations to isolated wetlands may be allowed only as follows:

1. On sites of less than twenty acres in size, one isolated wetland may be altered by relocating its functions into a new wetland on the site pursuant to an approved mitigation plan;

2. On sites twenty acres or greater in size, up to three isolated wetlands may be altered by combining their functions into one or more replacement wetlands on the site pursuant to an approved mitigation plan; and

3. Whenever an isolated wetland is altered pursuant to this subsection, the replacement wetland shall include enhancement for wildlife habitat;

L. One additional agricultural building or associated residence may be allowed within the wetland buffer on a grazed wet meadow if all hydrologic storage is replaced on the site;

M. Subject to a clearing and grading permit issued pursuant to ISDC chapter 16.82, the cutting of up to one cord of firewood may be permitted in buffers of five acres or larger in any year if the overall function of the buffer is not adversely affected. Removal of brush may also be permitted for the purpose of enhancing tree growth if the area of removal is limited to the diameter of the tree canopy at the time of planting; and

N.Wetland road crossings may be allowed if:

1. The Director determines that no alternative access is practical;

2. All crossings minimize impact to the wetland and provide mitigation for unavoidable impacts through restoration, enhancement or replacement of disturbed areas;

3. Crossings do not change the overall wetland hydrology;
4. Crossings do not diminish the flood storage capacity of the wetland; and
5. All crossings are constructed during summer low water periods.

O.Reconstruction, remodeling, or replacement of existing structures. Reconstruction, remodeling, or replacement of an existing structure upon another portion of an existing impervious surface which was established pursuant to City of Sammamish ordinances and regulations may be allowed provided:

1. If within the buffer, the structure is located no closer to the wetland than the existing structure,
2. The existing impervious surface within the buffer or wetland is not expanded as a result of the reconstruction or replacement.

P. Wetland enhancement or restoration not associated with any other development proposal may be allowed if accomplished according to a plan for its design, implementation, maintenance and monitoring prepared by a civil engineer and a qualified biologist and carried out under the direction of a qualified biologist. Restoration or enhancement must result in a net improvement to the functions of the wetland system; and

Q.A minor wetland restoration project for fish habitat enhancement may be allowed if:

1. The restoration is sponsored by a public agency with a mandate to do such work;
2. The restoration is not associated with mitigation of a specific development proposal;
3. The restoration is limited to revegetation of wetlands and their buffers and other specific fish and wildlife habitat improvements that result in a net improvement to the functions of the wetland system;
4. The restoration only involves the use of hand labor and light equipment, or the use of helicopters and cranes which deliver supplies to the project site provided that they have no contact with sensitive areas or their buffers; and
5. The restoration is performed under the direction of a qualified biologist.

21A.24.340 Wetlands: Mitigation requirements. A. Restoration shall be required when a wetland or its buffer is altered in violation of law or without any specific permission or approval by the City. The following minimum requirements shall be met for the restoration of a wetland:

1. The original wetland configuration shall be replicated including its depth, width, length and gradient at the original location;
2. The original soil type and configuration shall be replicated;
3. The wetland edge and buffer configuration shall be restored to its original condition;
4. The wetland, edge and buffer shall be replanted with vegetation native to King County which replicates the original vegetation in species, sizes and densities; and
5. The original wetland functions shall be restored including, but not limited to, hydrologic and biologic functions.

B.The requirements in subsection A. may be modified if the applicant demonstrates that greater wetland functions can otherwise be obtained.

C.Replacement shall be required when a buffer is altered pursuant to an approved development proposal or a wetland is used for a regional flow control facility or other approved use. The requirements for the restoration of wetlands shall be met by replacement wetlands.

D.Enhancement may be allowed when a wetland or buffer will be altered pursuant to a development proposal, but the wetland's biologic and/or hydrologic functions will be improved. Minimum requirements for enhancement shall be established in administrative rules.

E. All alterations of wetlands shall be replaced or enhanced on the site or within the same drainage basin using the following formulas: class 1 and 2 wetlands on a 2:1 basis and class 3 wetlands on a 1:1 basis with equivalent or greater biologic functions including, but not limited to, habitat functions and with equivalent hydrologic functions including, but not limited to, storage capacity.

F. Replacement or enhancement off the site may be allowed if the applicant demonstrates to the satisfaction of the City that the off-site location is in the same drainage sub-basin as the original wetland and that greater biologic and hydrologic functions will be achieved. The formulas in subsection E. shall apply to replacement and enhancement off the site.

G.Surface water management or flood control alterations including, but not limited to, wetponds shall not constitute replacement or enhancement unless other functions are simultaneously improved.

H.Mitigation sites should be located to alleviate wildlife habitat fragmentation.

21A.24.345 Not Used. 21A.24.350 Wetlands: Limited exemption. Isolated wetlands less than 1000 square feet may be exempted from the provisions of ISDC 21A.24.320 - 21A.24.340 and may be altered by filling or dredging if the City determines that the cumulative impacts do not unduly counteract the purposes of this chapter and are mitigated pursuant to an approved mitigation plan.

21A.24.360 Streams: Development standards. A development proposal on a site containing a stream shall meet the following requirements:

A.The following minimum buffers shall be established from the ordinary high water mark or from the top of the bank if the ordinary high water mark cannot be identified:

1. A class 1 stream shall have a 150-foot buffer;
2. A class 2 stream used by salmonids shall have a 150-foot buffer;
3. A class 2 stream shall have a 50-foot buffer;
4. A class 3 stream shall have a 25-foot buffer;
5. In the Bear Creek Basin, class 1 and 2 streams used by salmonids, shall have a 150-foot buffer;
6. In the Bear Creek Basin, a class 2 stream not used by salmonids, shall have a 100-foot buffer;
7. In the Bear Creek Basin, a class 3 stream shall have a 50-foot buffer except in designated regionally significant resource areas where a class 3 stream shall have a 100-foot buffer;
8. Any stream restored, relocated, replaced or enhanced because of a stream alteration shall have the minimum buffer required for the stream class involved;
9. Any stream with an ordinary high water mark within 25 feet of the toe of a slope 30% or steeper, but less than 40%, shall have:

a. the minimum buffer required for the stream class involved or a 25-foot buffer beyond the top of the slope, whichever is greater, if the horizontal length of the slope including small benches and terraces is within the buffer for that stream class; or

b. a 25-foot buffer beyond the minimum buffer required for the stream class involved if the horizontal length of the slope including small benches and terraces extends beyond the buffer for that stream class; and

10. Any stream adjoined by a riparian wetland or other contiguous sensitive area shall have the buffer required for the stream class involved or the buffer which applies to the wetland or other sensitive area, whichever is greater;

B. Buffer width averaging may be allowed by the City if it will provide additional natural resource protection, as long as the total area contained in the buffer on the development proposal site does not decrease;

C. Increased buffer widths shall be required by the City when necessary to protect streams. Provisions for additional buffer widths shall be contained in administrative rules promulgated pursuant to this chapter

including, but not limited to, critical drainage areas, location of hazardous substances, critical fish and wildlife habitat, landslide or erosion hazard areas contiguous to streams, groundwater recharge and discharge and the location of trail or utility corridors;

D. The use of hazardous substances, pesticides and fertilizers in the stream corridor and its buffer may be prohibited by the City; and

E. The livestock restrictions in ISDC 21A.24.320 shall also apply to class 1 and 2 streams and their buffers.

21A.24.370 Streams: Permitted alterations. Alterations to streams and buffers may be allowed pursuant to ISDC 21A.24.075 or as follows:

A. Alterations may only be permitted if based upon a special study;

B. The applicant shall notify affected communities and native tribes of proposed alterations prior to any alteration if a stream is in a flood hazard area and shall submit evidence of such notification to the Federal Insurance Administration;

C. There shall be no introduction of any plant or wildlife which is not indigenous to King County into any stream or buffer unless authorized by a state or federal permit or approval;

D. Utilities may be allowed in stream buffers if:

1. No practical alternative location is available;

2. The utility corridor meets any additional requirements set forth in administrative rules including, but not limited to, requirements for installation, replacement of vegetation and maintenance;

3. The requirements for sewer utility corridors in ISDC 21A.24.330 shall also apply to streams; and

4. Joint use of an approved sewer utility corridor by other utilities may be allowed;

E. The following surface water management activities and facilitates may be allowed in stream buffers as follows:

1. Surface water discharge to a stream from a flow control or water quality treatment facility, sediment pond or other surface water management activity or facility may be allowed if the discharge is in compliance with the Surface Water Design Manual;

2. A class 2 stream or buffer may be used for a regional stormwater management facility if:

a. a public agency and utility exception is granted pursuant to ISDC 21A.24.070;

b. all requirements of the Surface Water Design Manual are met;

c. the use will not alter the rating or the factors used in rating the stream;

d. there are no significant adverse impacts to the stream; and

3. A class 3 stream or buffer may be used as a regional stormwater management facility if the alteration will have no lasting adverse impact on any stream and all requirements of the Surface Water Design Manual are met;

F. Except as provided in subsection G, public and private trails may be allowed in stream buffers only upon adoption of administrative rules consistent with the following:

1. The trail surface shall not be made of impervious materials, except that public multi-purpose trails such as the East Lake Sammamish Trail may be made of impervious materials if they meet all other requirements including water quality; and

2. Buffers shall be expanded, where possible, equal to the width of the trail corridor including disturbed areas;

G.Stream crossings may be allowed and may encroach on the otherwise required stream buffer if:

1. All crossings use bridges or other construction techniques which do not disturb the stream bed or bank, except that bottomless culverts or other appropriate methods demonstrated to provide fisheries protection may be used for class 2 or 3 streams if the applicant demonstrates that such methods and their implementation will pose no harm to the stream or inhibit migration of fish;

2. All crossing are constructed during the summer low flow and are timed to avoid stream disturbance during periods when use is critical to salmonids;

3. Crossings do not occur over salmonid spawning areas unless the City determines that no other possible crossing site exists;

4. Bridge piers or abutments are not placed within the FEMA floodway or the ordinary high water mark;

5. Crossings do not diminish the flood-carrying capacity of the stream;

6. Underground utility crossings are laterally drilled and located at a depth of four feet below the maximum depth of scour for the base flood predicted by a civil engineer licensed by the state of Washington. Temporary bore pits to perform such crossings may be permitted within the stream buffer established in ISDC 21A.24.360. Crossing of Class 3 streams when dry may be made with open cuts; and

7. Crossings are minimized and serve multiple purposes and properties whenever possible;

H.Stream relocations may be allowed only for:

1. Class 2 streams as part of a public road project for which a public agency and utility exception is granted pursuant to ISDC 21A.24.050; and

2. Class 3 streams for the purpose of enhancing resources in the stream if:

a. appropriate floodplain protection measures are used; and

b. the relocation occurs on the site, except that relocation off the site may be allowed if the applicant demonstrates that any on-site relocation is impracticable, the applicant provides all necessary easements and waivers from affected property owners and the off-site location is in the same drainage sub-basin as the original stream;

I. For any relocation allowed by this section, the applicant shall demonstrate, based on information provided by a civil engineer and a qualified biologist, that:

1. The equivalent base flood storage volume and function will be maintained;
2. There will be no adverse impact to local groundwater;
3. There will be no increase in velocity;
4. There will be no interbasin transfer of water;
5. There will be no increase in sediment load;
6. Requirements set out in the mitigation plan are met;
7. The relocation conforms to other applicable laws; and
8. All work will be carried out under the direct supervision of a qualified biologist;

J. A stream channel may be stabilized if:

1. Movement of the stream channel threatens existing residential or commercial structures, public facilities or improvements, unique natural resources or the only existing access to property; and

2. The stabilization is done in compliance with the requirements of ISDC 21A.24.230 through 21A.24.270 and administrative rules promulgated pursuant to this chapter;

K.Stream enhancement not associated with any other development proposal may be allowed if accomplished according to a plan for its design, implementation, maintenance and monitoring prepared by a civil engineer and a qualified biologist and carried out under the direction of a qualified biologist;

L. A minor stream restoration project for fish habitat enhancement may be allowed if:

1. The restoration is sponsored by a public agency with a mandate to do such work;

2. The restoration is unassociated with mitigation of a specific development proposal;

3. The restoration is limited to placement of rock wiers, log controls, spawning gravel and other specific salmonid habitat improvements;

4. The restoration only involves the use of hand labor and light equipment; or the use of helicopters and cranes which deliver supplies to the project site provided that they have no contact with sensitive areas or their buffers; and

5. The restoration is performed under the direction of a qualified biologist;

M. Roadside and agricultural drainage ditches which carry streams with salmonids may be maintained through the use of best management practices developed in consultation with relevant county, state and federal agencies. These practices shall be adopted as administrative rules;

N.Subject to a clearing and grading permit issued pursuant to ISDC 16.82, the cutting of up to one cord of firewood may be permitted in buffers of five acres or larger in any year if the overall function of the buffer is not adversely affected. Removal of brush may also be permitted for the purpose of enhancing tree growth if the area of removal is limited to the diameter of the tree canopy at the time of planting.

O.Reconstruction, remodeling, or replacement of existing structures. Reconstruction, remodeling, or replacement of an existing structure upon another portion of an existing impervious surface which was established pursuant to City ordiances and regulations may be allowed provided:

1. If within the buffer, the structure is located no closer to the stream than the existing structure,

2. The existing impervious surface within the buffer or stream is not expanded as a result of the reconstruction or replacement.

21A.24.380 Streams: Mitigation requirements. A. Restoration shall be required when a stream or its buffer is altered in violation of law or without any specific permission or approval by the City. A mitigation plan for the restoration shall demonstrate that:

1. The stream has been degraded and will not be further degraded by the restoration activity;

2. The restoration will reliably and demonstrably improve the water quality and fish and wildlife habitat of the stream;

3. The restoration will have no lasting significant adverse impact on any stream functions; and

4. The restoration will assist in stabilizing the stream channel.

B.The following minimum requirements shall be met for the restoration of a stream:

1. All work shall be carried out under the direct supervision of a qualified biologist;

2. Basin analysis shall be performed to determine hydrologic conditions;

3. The natural channel dimensions shall be replicated including its depth, width, length and gradient at the original location, and the original horizontal alignment (meander lengths) shall be replaced;

4. The bottom shall be restored with identical or similar materials;

5. The bank and buffer configuration shall be restored to its original condition;

6. The channel, bank and buffer areas shall be replanted with vegetation native to King County which replicates the original vegetation in species, sizes and densities; and

7. The original biologic functions of the stream shall be recreated.

C. The requirements in subsection B. may be modified if the applicant demonstrates to the satisfaction of the City that a greater biologic function can otherwise be obtained;

D. Replacement or enhancement shall be required when a stream or buffer is altered pursuant to an approved development proposal. There shall be no net loss of stream functions on a development proposal site and no impact on stream functions above or below the site due to approved alterations.

E. The requirements which apply to the restoration of streams in subsection B. shall also apply to the relocation of streams, unless the applicant demonstrates to the satisfaction of the City that a greater biologic function can be obtained by modifying these requirements.

F. Replacement or enhancement for approved stream alterations shall be accomplished in streams and on the site unless the applicant demonstrates to the satisfaction of the City that:

1. Enhancement or replacement on the site is not possible;

2. The off-site location is in the same drainage sub-basin as the original stream; and

3. Greater biologic and hydrologic functions will be achieved.

G. Surface water management or flood control alterations shall not be considered enhancement unless other functions are simultaneously improved.

21A.24.390 Sensitive areas mitigation fee - Creation of fund. There is hereby created a Sensitive Areas Mitigation Fund. This fund shall be administered by the City's Finance Director.

21A.24.400 Sensitive areas mitigation fee - Source of funds. All monies received from penalties resulting from the violation of rules and laws regulating development and activities within sensitive areas shall be deposited into the fund.

21A.24.410 Sensitive areas mitigation fee - Use of funds. Monies from the fund shall only be used for paying the cost of enforcing and implementing sensitive area laws and rules.

21A.24.420 Sensitive areas mitigation fee - Investment of funds. Monies in the fund not needed for immediate expenditure shall be deposited in a separate investment fund pursuant to RCW 36.29.020. The Finance Director shall be designated as the investment fund Director.

Chapter 21A.28
DEVELOPMENT STANDARDS - ADEQUACY OF PUBLIC FACILITIES AND SERVICES

Sections:

21A.28.010 Purpose.
21A.28.020 General requirements.
21A.28.030 Adequate sewage disposal.
21A.28.040 Adequate water supply.
21A.28.050 Surface water management.
21A.28.060 Adequate streets~~roads~~.
21A.28.120 Adequate vehicular access.
21A.28.130 Adequate fire protection.
21A.28.140 School concurrency - Applicability and relationship to fees.
21A.28.150 Findings, recommendations, and decisions regarding school capacities.
21A.28.152 ~~Submission of district capital facilities plan and data.~~Not Used.
21A.28.154 ~~School Technical Review Committee.~~Not Used.
21A.28.156 Annual C~~c~~ouncil review.
21A.28.160 School concurrency standard.
21A.28.180 Credit for improvements.

21A.28.010 Purpose. The purpose of this chapter is to ensure that public facilities and services necessary to support development are adequate or will be provided in a timely manner consistent with the Public Facilities and Services planning goal of the Washington State Growth Management Act of 1990 by:

A. Specifying the on-site and off-site facilities and services that must be in place or otherwise assured of timely provision prior to development;

B. Allocating the cost of those facilities and services fairly; and

C. Providing a general framework for relating development standards and other requirements of this code to:

1. Adopted service level standards for public facilities and services;

2. Procedural requirements for phasing development projects to ensure that services are provided as development occurs; and

3. The review of development permit applications. ~~(Ord. 10870 § 511, 1993).~~

21A.28.020 General requirements. A. All new development proposals including any use, activity, or structure allowed by ~~K.C.C.~~ISDC 21A.08 that requires ~~King County~~City approval shall be adequately served by the following facilities and services prior to the time of occupancy, recording, or other land use approval, as further specified in this chapter:

1. Sewage disposal;
2. Water supply;
3. Surface water management;
4. ~~Roads~~ Streets and access;
5. Fire protection service; and
6. Schools.

B. All new development proposals for building permits, plats, short plats, urban planned developments and lot line adjustments, which will be

served by a sewer or water district, shall include a certificate of water availability and/or certificate of sewer availability to demonstrate compliance with this chapter and other provisions of the ~~King County~~Sammamish Interim Development Code, the ~~King County~~City of Sammamish Interim Comprehensive Plan and the Growth Management Act.

C. Regardless of the number of sequential permits required, the provisions of this chapter shall be applied only once to any single development proposal. If changes and modifications result in impacts not considered when the proposal was first approved, the ~~county~~ City shall consider the revised proposal as a new development proposal. ~~(Ord. 11621 § 83, 1994: 10870 § 512, 1993).~~

21A.28.030 Adequate sewage disposal. All new development shall be served by an adequate public or private sewage disposal system, including both collection and treatment facilities as follows:

A. A public sewage disposal system is adequate for a development proposal provided that:

1. For the issuance of a building permit, preliminary plat or short plat approval or other land use approval, the site of the proposed development is or can be served by an existing disposal system consistent with the ~~Sewerage General Plan~~adopted Sewer System Plans of the Plateau Water and Sewer District and the Northeast Sammamish Water and Sewer District, and the disposal system has been approved by the D~~d~~epartment as being consistent with applicable state and local design and operating guidelines;

2. For the issuance of a certificate of occupancy for a building or change of use permit, the approved public sewage disposal system as set forth in subsection A.1 of this section is installed to serve each building or lot;

3. For recording a final plat, final short plat or binding site plan the approved public sewage disposal system set forth in subsection A.1 of this section shall be installed to serve each lot respectively; or a bond or similar security shall be deposited with ~~King County~~the City of Sammamish for the future installation of an adequate sewage disposal system. The bond may be assigned to a purveyor to assure the construction of such facilities within two years of recording; and

4. For a zone reclassification or urban planned development permit, the timing of installation of required sewerage improvements shall be contained in the approving ordinance as specified in ~~K.C.C.~~ISDC 20.24.230; and

B. A private individual sewage system is adequate, if an on-site sewage disposal system for each individual building or lot is installed to meet the requirements and standards of the King County D~~d~~epartment of P~~p~~ublic H~~h~~ealth as to lot size, soils, and system design prior to issuance of a certificate of occupancy for a building or change of use permit. ~~(Ord. 11621 § 84, 1994: 10870 § 513, 1993).~~

21A.28.040 Adequate water supply. All new development shall be served by an adequate public or private water supply system as follows:

A. A public water system is adequate for a development proposal provided that:

1. For the issuance of a building permit, preliminary plat approval or other land use approval, the applicant must demonstrate that the existing water supply system available to serve the site:

a. complies with the applicable planning, operating and design requirements of WAC 246.290~~; K.C.C. 14.42 and K.C.C. 14.44 and K.C.C. Title 17; Coordinated Water system plans; K.C.C. Title 12, K.C.C. Title 13~~ and other applicable provisions of the rules and regulations of the King County B~~b~~oard of H~~h~~ealth; and any limitation or condition imposed by the ~~county-approved comprehensive~~ adopted plan of the water purveyor; and

b. the proposed improvements to an existing water system have been reviewed by the Cith Engineer ~~department~~ and determined to comply with the design standards and conditions specified in paragraph a. of this subsection; or

c.a proposed new water supply system has been reviewed by the ~~department~~City Engineer and determined to comply with the design standards and conditions specified in paragraph a. of this subsection;

2.Prior to issuance of a certificate of occupancy for a building or change of use permit, the approved public water system and any system improvements set forth in subsection A.1 of this section shall be installed to serve each building or lot respectively;

3.For recording a final plat, final short plat or binding site plan, either the approved public water supply system or system improvements set forth in subsection A.1 of this section shall be installed to serve each lot or a bond or similar security shall be deposited with ~~King County~~the City of Sammamish and may be assigned to a purveyor to assure the construction of required water facilities in Group A systems as defined by board of health regulations, within two years of recording; and

4.For a zone reclassification or urban planned development permit, the timing of installation of required water system improvements shall be included in the approving ordinance as specified in ~~K.C.C.~~ISDC 20.24.230.

B. An on-site, individual water system is adequate and the plat or short plat may receive preliminary and final approval, and a building or change of use permit may be issued if:

1.~~In an urban area if:~~Not Used

a.~~the buildings or lots to be served are located outside of a county approved water purveyor service area; or~~Not Used

b.The water purveyor has indicated that service cannot be provided in compliance with the purveyor's approved ~~comprehensive~~ water system plan; and

c.The Seattle-King County D~~d~~epartment of P~~p~~ublic H~~h~~ealth has approved the proposed method of water supply in accordance with the applicable King County board of health rules and regulations and this section. The applicant shall provide appropriate information to demonstrate to the D~~d~~epartment and the Seattle-King County D~~d~~epartment of P~~p~~ublic H~~h~~ealth that a private individual water system will be adequate. The Seattle-King County department of public health may require installation of private individual water systems prior to final approval of a plat or short plat where information is insufficient to show an adequate water supply can be made available.

2.~~In a rural area, if the Seattle-King County department of public health has approved the proposed method of water supply in accordance with the applicable King County board of health rules and regulations and this section. The applicant shall provide appropriate information to demonstrate to the department and the Seattle-King County department of public health that a private individual water system will be adequate. The Seattle-King County department of public health may require installation of private individual water systems prior to final approval of a plat or short plat where information is insufficient to show an adequate water supply can be made available. (Ord. 10870 § 514, 1993).~~Not Used

21A.28.050 Surface water management. All new development shall be served by an adequate surface water management system as follows:

A. The proposed system is adequate if the development proposal site is served by a surface water management system approved by the D~~d~~epartment as being consistent with the design, operating and procedural requirements of the Surface Water Design Manual and K.C.C. Title 9;

B. For a subdivision, zone reclassification or urban planned development, the phased installation of required surface water management improvements shall be stated in the approving ordinance as specified in ~~K.C.C.~~ISDC 20.24.230. Such phasing may require that a bond or similar security be deposited with ~~King County~~the City of Sammamish; and

C. A variance request from the requirements of the Surface Water Design Manual and K.C.C. Title 9 shall be reviewed as set forth in K.C.C. 9.04.050 and does not require a variance from this Title unless relief is requested from a building height, setback, landscaping or other development standard set forth in ~~K.C.C.~~ ISDC 21A.12 through ~~K.C.C.~~ISDC 21A.30. ~~(Ord. 10870 § 515, 1993).~~

21A.28.060 Adequate ~~roads~~streets. A. All new development shall be served by adequate ~~roads~~streets. ~~Roads~~ Streets are adequate if the development's traffic impacts on surrounding public roads are acceptable under the level-of-service standards and the compliance procedures established in ~~K.C.C.~~ISDC Title 14.

B. The renewal of permits or the issuance of a new permit for existing uses constitutes a new development proposal only if it will generate additional traffic above that currently generated by the use.

C. A variance request from the ~~road~~ street cross-section or construction standards established by ~~K.C.C.~~ISDC Title 14, ~~Roads~~ Streets and Bridges, shall be reviewed as set forth in ~~K.C.C.~~ISDC 14.42.060 and does not require a variance from this Title unless relief is requested from a building height, setback, landscaping or other development standard set forth in ~~K.C.C.~~ISDC 21A.12 through ~~K.C.C.~~ISDC 21A.30. ~~(Ord. 11621 § 85, 1994: 10870 § 516, 1993).~~

21A.28.120 Adequate vehicular access. All new development shall be served by adequate vehicular access as follows:

A. The property upon which the development proposed is to be located has direct access to:

1.A public or private street that meets ~~county~~ City ~~road~~ street standards or is formally declared acceptable by the ~~county road~~ City ~~E~~engineer; or

2.The property has access to such a street over a private driveway approved by the ~~county~~City;

B. The proposed circulation system of a proposed subdivision, short subdivision or binding site plan shall intersect with existing and anticipated streets abutting the site at safe and convenient locations, as determined by the department and the ~~county road~~City ~~E~~engineer; and

C. Every lot upon which one or more buildings is proposed to be erected or traffic generating use is proposed to be established, shall establish safe access as follows:

1.Safe passage from the street right-of-way to building entrances for transit patrons and other pedestrians, in accordance with the design standards set forth in ~~K.C.C.~~ISDC 21A.18;

2.Direct access from the street right-of-way, fire lane or a parking space to any part of the property as needed to provide public services in accordance with adopted standards (e.g. fire protection, emergency medical service, mail delivery or trash collection); and

3. Direct access from the street right-of-way, driveway, alley or other means of ingress/egress approved by ~~King County~~the City, to all required off-street parking spaces on the premises. ~~(Ord. 10870 § 522, 1993).~~

21A.28.130 Adequate fire protection. All new development shall be served by adequate fire protection as set forth below:

A. The site of the development proposed is served by a water supply system that provides at least minimum fire flow and a, road system or fire

lane system that provides life safety/rescue access, and other fire protection requirements for buildings as required by ~~K.C.C.~~ISDC Title 17, Fire Code and ~~K.C.C.~~ISDC Title 16, Building and Construction Standards;

B. For a zone reclassification or Urban planned development, the timing of installation of required fire protection improvements shall be stated in the approving ordinance as specified in ~~K.C.C.~~ISDC 20.24.230, secured with a bond or similar security, and deposited with ~~King County~~the City of Sammamish; and

C. A variance request from the requirements established by ~~K.C.C.~~ISDC Title 17, Fire Code, shall be reviewed as set forth ~~in K.C.C. 17.08.090 or K.C.C. 17.10.040, and/or~~ in Article 2 of the currently adopted edition of the Uniform Fire Code and does not require a variance from this title unless relief is requested from a building height, setback, landscaping or other development standard set forth in ~~K.C.C.~~ISDC 21A.12 through ~~K.C.C.~~ISDC 21A.30. ~~(Ord. 10870 § 523, 1993).~~

21A.28.140 School concurrency - Applicability and relationship to fees.

A. The school concurrency standard set out in Section 21A.28.160 shall apply to applications for preliminary plat or Urban Planned Development (UPD) approval, mobile home parks, requests for multifamily zoning, and building permits for multifamily housing projects which have not been previously evaluated for compliance with the concurrency standard.

B. The ~~county's~~ City's finding of concurrency shall be made at the time of preliminary plat or UPD approval, at the time that a request to actualize potential multifamily zoning is approved, at the time a mobile home park site plan is approved, or prior to building permit issuance for multifamily housing projects which have not been previously established for compliance with the concurrency standard. Once such a finding has been made, the development shall be considered as vested for purposes of the concurrency determination.

C. Excluded from the application of the concurrency standard are:

1. Building permits for individual single family dwellings;

2. Any form of housing exclusively for senior citizens, including nursing homes and retirement centers;

3. Shelters for temporary placement, relocation facilities and transitional housing facilities.;

4. Replacement, reconstruction or remodeling of existing dwelling units;

5. Short subdivisions that create four or fewer lots;

6. ~~Building permits for residential units in preliminary planned unit developments which were under consideration by King County on January 22, 1991;~~Not Used.

7. ~~Building permits for residential units in recorded planned unit developments approved pursuant to K.C.C. Title 21 that have not yet expired per K.C.C. 21.56.060;~~Not Used

8. ~~Building permits applied for by December 31, 1993, related to rezone applications to actualize potential zoning which were under consideration by King County on January 22, 1991;~~Not Used

9. ~~Building permits applied for by December 31, 1993, related to residential development proposals for site plan review to fulfill P-~~

~~Suffix requirements of multifamily zoning which were under consideration by King County on January 22, 1991; and~~Not Used.

10. Any residential building permit for any development proposal for which a concurrency determination has already been made pursuant to the terms of ~~K.C.C.~~ISDC Title 21A.

D. All of the development activities which are excluded from the application of the concurrency standard are subject to school impact fees imposed pursuant to Title 27.

E. The assessment and payment of impact fees are governed by and shall be subject to the provisions in ~~K.C.C.~~ISDC Title 27 addressing school impact fees.

F. A certification of concurrency for a school district shall not preclude the ~~county~~ City from collecting impact fees for the district. Impact fees may be assessed and collected as long as the fees are used to fund capital and system improvements needed to serve the new development, and as long as the use of such fees is consistent with the requirements of Chapter 82.02 RCW and this chapter. Pursuant to Chapter 82.02 RCW, impact fees may also be used to recoup capital and system improvement costs previously incurred by a school district to the extent that new growth and development will be served by the previously constructed improvements or incurred costs. ~~(Ord. 11621 § 87, 1994: 11157 § 25, 1993: Ord. 10870 § 524, 1993).~~

21A.28.150 Findings, recommendations, and decisions regarding school capacities. A. In making a threshold determination pursuant to SEPA, the D~~d~~irector and/or the H~~h~~earing E~~e~~xaminer, in the course of reviewing proposals for residential development including applications for plats or UPD's, mobile home parks, or multi-family zoning, and multifamily building permits, shall consider the school district's capital facilities plan as adopted by the City C~~c~~ouncil.

B. Documentation which the district is required to submit to King County pursuant to K.C.C.~~section~~ 21A.28.152 ~~or Title 20.~~ shall be incorporated into the record in every case without requiring the district to offer such plans and data into the record. The school district is also authorized to present testimony and documents demonstrating a lack of concurrency in the district and the inability of the district to accommodate the students to be generated by a specific development.

C. Based upon a finding that the impacts generated by the plat, the UPD, mobile home park or the multi-family development were generally not anticipated at the time of the last ~~council~~ City Council review and approval of a school district capital plan and were not included in the district's long-range forecast, the D~~d~~irector may require or recommend phasing or provision of the needed facilities and/or sites as appropriate to address the deficiency or deny or condition approval, consistent with the provisions of this chapter, the State Subdivision Act, and the State Environmental Policy Act.

D. Determinations of the Hearing E~~e~~xaminer or D~~d~~irector regarding concurrency can be appealed only pursuant to the provisions for appeal of the development permit process for which the determination has been made. Where no other administrative appeal process is available, an appeal may be taken to the H~~h~~earing E~~e~~xaminer using the appeal procedures for variances. Any errors in the formula identified as a result of an appeal should be referred to the City C~~c~~ouncil for possible modifications.

E. Where the council has not adopted an impact fee ordinance for a particular school district, the language of this section shall not affect the authority or duties of the Hearing E~~e~~xaminer or the D~~d~~irector

pursuant to the State Environmental Policy Act or the State Subdivision Act. ~~(Ord. 11621 § 88, 1994: 11157 § 26, 1993: Ord. 10870 § 525, 1993).~~

21A.28.152 ~~**Submission of district capital facilities plan and data.**~~ ~~A. On an annual basis, each school district shall submit the following materials to the School Technical Review Committee created pursuant to Section 21A.28.154:~~**Not Used.**

~~1.The district's capital facilities plan adopted by the school board which is consistent with the Growth Management Act.~~

~~2.The district's enrollment projections over the next six (6) years, its current enrollment and the district's enrollment projections and actual enrollment from the previous year.~~

~~3.The district's standard of service.~~

~~4.An inventory and evaluation of district facilities which address the district's standard of service.~~

~~5.The district's overall capacity over the next six (6) years, which shall be a function of the district's standard of service as measured by the number of students which can be housed in district facilities.~~

~~B. To the extent that the district's standard of service reveals a deficiency in its current facilities, the district's capital facilities plan must demonstrate a plan for achieving the standard of service, and must identify the sources of funding for building or acquiring the necessary facilities to meet the standard of service.~~

~~C. Facilities to meet future demand shall be designed to meet the adopted standards of service. If sufficient funding is not projected to be available to fully fund a capital plan which meets the standard of service, the district's capital plan should document the reason for the funding gap.~~

D~~. If an impact fee ordinance has been adopted on behalf of a school district, the district shall also submit an annual report to the School Technical Review Committee showing the capital improvements which were financed in whole or in part by the impact fees. (Ord. 11621 § 89, 1994).~~

21A.28.154 ~~**School Technical Review Committee.** A. There is hereby created a School Technical Review Committee (STRC) within King County. The Committee shall consist of 4 county staff persons, one each from the department of development and environmental services, the planning and community development division, the office of financial management and the county council.~~**Not Used.**

~~B. The Committee shall be charged with reviewing each school district's capital facilities plan, enrollment projections, standard of service, the district's overall capacity for the next six (6) years to ensure consistency with the Growth Management Act, King County Comprehensive Plan, and adopted community plans, and the district's calculation and rationale for proposed impact fees.~~

~~C. Notice of the time and place of the Committee meeting where the district's documents will be considered shall be provided to the district.~~

~~D. At the meeting where the Committee will review or act upon the district's documents, the district shall have the right to attend or to be represented, and shall be permitted to present testimony to the Committee. Meetings shall also be open to the public.~~

~~E. In its review, the Committee shall consider the following factors:~~

~~1.Whether the district's forecasting system for enrollment projections has been demonstrated to be reliable and reasonable.~~

~~2. The historic levels of funding and voter support for bond issues in the district;~~

~~3. The inability of the district to obtain the anticipated state funding or to receive voter approval for district bond issues;~~

~~4. An emergency or emergencies in the district which required the closing of a school facility or facilities resulting in a sudden and unanticipated decline in districtwide capacity; and~~

~~5. The standards of service set by school districts in similar types of communities. While community differences will be permitted, the standard~~

~~established by the district should be reasonably consistent with the standards set by other school districts in communities of similar socioeconomic profile.~~

~~6.The Committee shall consider the standards identified by the state concerning the ratios of certificated instructional staff to students.~~

~~F. In the event that the district's standard of service reveals a deficiency in its current facilities, the Committee shall review the district's capital facilities plan to determine whether the district has identified all sources of funding necessary to achieve the standard of service.~~

~~G. The district in developing the Financing Plan Component of the Capital Facilities Plan shall plan on a six-year horizon and shall demonstrate its best efforts by taking the following steps:~~

~~1.Establish a six-year financing plan, and propose the necessary bond issues and levies required by and consistent with that plan and as approved by the school board and consistent with RCW 28A.53.020 and RCW 84.52.052 and .056 as amended; and~~

~~2.Apply to the state for funding, and comply with the state requirement for eligibility to the best of the district's ability.~~

~~H. The Committee is authorized to request the school district to review and to resubmit its capital facilities plan, or to establish a different standard of service, or to review its capacity for accommodating new students, under the following circumstances:~~

~~1.The standard of service established by the district is not reasonable in light of the factors set forth in subsection E of this section.~~

~~2.The Committee finds that the district's standard of service cannot reasonably be achieved in light of the secured financial commitments and the historic levels of support in the district; or~~

~~3.Any other basis which is consistent with the provisions of this section.~~

~~I. The Committee shall prepare and submit an annual report to the King County council for each school district recommending a certification of concurrency in the district, except as provided in Subsection L of this section using the school concurrency standard as set forth in K.C.C. 21A.28.160. If a school district fails to submit its capital facilities plan for review by the STRC, King County shall assume the district has adequate capacity to accommodate growth for the following six years.~~

~~J. The Committee shall submit copies of its recommendation of concurrency for each school district to the director of DDES, to the hearing examiner, and to the district.~~

~~K. The Committee shall recommend to the council a comprehensive plan amendment adopting the district's capital facilities plan as part of the comprehensive plan, for any plan which the Committee concludes accurately reflects the district's facilities status.~~

~~L. In the event that after reviewing the district's capital facilities plan and other documents, the Committee is unable to recommend certifying concurrency in a school district, the Committee shall submit a statement to the council, the director and the hearing examiner stating that the Committee is unable to recommend certifying concurrency in a~~

~~specific school district. The Committee shall recommend to the executive that he propose to the council, amendments to the land use element of the King County Comprehensive Plan or amendments to the development regulations implementing the plan to more closely conform county land use plans and school facilities plans, including but not limited to requiring mandatory phasing of plats, UPDs or multifamily development located within the district's boundary. The necessary draft amendments shall accompany such recommendations. (Ord. 11621 § 90, 1994).~~

21A.28.156 Annual Ceouncil review. A. On at least an annual basis, the ~~King County~~Sammamish City Ceouncil shall review the reports prepared by the King County School Technical Review Committee, as described in K.C.C. 21A.28.154, and confirm that the King County Council has certifed~~y~~ the ~~district's~~ plans of the Issaquah and Lake Washington school districts. ~~The review may occur in conjunction with any update of the Facilities and Services chapter of the King County Comprehensive Plan proposed by the Committee.~~

B. ~~The council shall review and consider any proposal(s) submitted by the Committee for amending the land use policies of the King County Comprehensive Plan, or the development regulations implementing the plan, including but not limited to requiring mandatory phasing of plats, UPDs or multifamily development when the Committee is unable to recommend a certification of concurrency in a specific school district. Any proposed amendments to the comprehensive plan or development regulations shall be subject to the public hearing and other procedural requirements set out in Title 20 or 21A, as applicable.~~Not Used.

C. ~~The council may require the Committee to submit proposed amendments or may itself initiate amendments to the land use policies of the King County Comprehensive Plan, or amendments to the development regulations implementing the plan. (Ord. 11621 § 91, 1994).~~Not Used

21A.28.160 School concurrency standard. A. Schools shall be considered to have been provided concurrently with the development which will impact the schools if:

1.The permanent and interim improvements necessary to serve the development are planned to be in place at the time the impacts of development are expected to occur; or

2. The necessary financial commitments are in place to assure the completion of the needed improvements to meet the district's standard of service within 3 years of the time that the impacts of development are expected to occur. Necessary improvements are those facilities identified by the district in its capital facilities plan as reviewed and adopted by ~~King County~~the City of Sammamish.

B. Any combination of the following shall constitute the "necessary financial commitments" for the purposes of subsection A.

1.The district has received voter approval of and/or has bonding authority;

2.The district has received approval for federal, state, or other funds;

3.The district has received a secured commitment from a developer that the developer will construct the needed permanent school facility, and the school district has found such facility to be acceptable and consistent with its capital facilities plan; and/or

4.The district has other assured funding, including but not limited to school impact fees which have been paid.

C. Compliance with this concurrency requirement of this section shall be sufficient to satisfy the provisions of RCW 58.17.060 and RCW 58.17.110. ~~(Ord. 10870 § 526, 1993).~~

21A.28.180 Credit for improvements. Whenever a development is granted approval subject to a condition that the development proponent actually provide a school facility acceptable to the district, the development proponent shall be entitled to a credit for the actual cost of providing the facility, against the fee that would be chargeable under the formula provided by ~~K.C.C.~~ISDC Title 27. The cost of construction shall be estimated at the time of approval, but must be documented and the documentation confirmed after the construction is completed to assure that an accurate credit amount is provided. If construction costs are less than the calculated fee amount, the difference remaining shall be chargeable as a school impact fee. ~~(Ord. 10870 § 528, 1993).~~

Chapter 21A.30
DEVELOPMENT STANDARDS
ANIMALS, HOME OCCUPATION, HOME INDUSTRY

Sections:

21A.30.010 Purpose.
21A.30.020 Animal regulations - Small animals.
21A.30.030 ~~Animal regulations - Livestock - Purpose~~Not Used.
21A.30.040 ~~Animal regulations - Livestock - Densities~~Not Used.
21A.30.045 ~~Animal regulations - Livestock - Farm management plans~~Not Used..
21A.30.060 ~~Animal regulations - Livestock - Management standards~~Not Used.
21A.30.062 ~~Animal regulations - Livestock - Building requirements~~Not Used..
21A.30.064 ~~Animal regulations - Livestock - Livestock oversight committee~~Not Used.
21A.30.066 ~~Animal regulations - Livestock - Education and enforcement~~Not Used..
21A.30.067 ~~Livestock management - information~~Not Used.
21A.30.068 ~~Livestock management - waste disposal~~Not Used.
21A.30.070 ~~Existing livestock operations~~Not Used.
21A.30.075 ~~Interdisciplinary teams~~Not Used.
21A.30.080 Home occupation.
21A.30.090 Home industry.
21A.30.200 ~~Severability.~~

Not Used.

21A.30.010 Purpose. The purpose of this chapter is to enhance and preserve the compatibility between neighboring properties by regulating the scope and intensity of accessory uses or activities. ~~(Ord. 10870 § 529, 1993).~~

21A.30.020 Animal regulations - Small animals. The raising, keeping, breeding or fee boarding of small animals are subject to K.C.C. 11.04, Animal Control Regulations, and the following requirements:

A. Small animals which are kept indoors as household pets in aquariums, terrariums, cages or similar containers shall not be limited in number, except as may be provided in K.C.C. Title 11. Other small animals excluding cats kept indoors as household pets shall be limited to five, of which not more than three may be unaltered cats or dogs. Cats kept indoors shall not be limited in numbers.

B. Other small animals kept outside, including adult cats and dogs, shall be limited to three per household on lots of less than 20,000 square feet, five per household on lots of 20,000 to 35,000 square feet, with an additional 2 per acre of site area over 35,000 square feet up to a maximum of 20, unless more are allowed as an accessory use pursuant to paragraph E., provided that all unaltered animals kept outdoors must be kept on a leash or in a confined area, except as authorized for a hobby kennel or cattery or commercial kennel or cattery pursuant to K.C.C. 11.04.

C. Excluding kennels and catteries, the total number of unaltered adult cats and/or dogs per household shall not exceed three.

D. Animals considered to be household pets shall be treated as other small animals pursuant to ~~K.C.C.~~ISDC 21A.30.020E when they are kept for commercial breeding, boarding or training.

E. Small animals and household pets kept as an accessory use outside the dwelling, shall be raised, kept or bred only as an accessory use on the premises of the owner, or in a kennel or cattery approved through the conditional use permit process, subject to the following limitations:

1. Birds shall be kept in an aviary or loft that meets the following standards:

a. The aviary or loft shall provide 1/2 square foot for each parakeet, canary or similarly sized birds, 1 square foot for each pigeon, small parrot or

similarly sized bird, and 2 square feet for each large parrot, macaw or similarly sized bird.

b. Aviaries or lofts shall not exceed 2,000 square feet~~, provided this limit shall not apply in rural, forestry, or agricultural zones~~.

c. The aviary is set back at least 10 feet from any property line, and 20 feet from any dwelling unit.

2. Small animals other than birds shall be kept according to the following standards:

a. The minimum site area shall be one-half acre if more than 3 small animals are being kept.

b. All animals shall be confined within a building, pen, aviary or similar structure.

c. Any covered structure used to house or contain such animals shall maintain a distance of not less than 10 feet to any property line, except structures used to house mink and fox shall be a distance of not less than 150 feet.

d. Poultry, chicken, squab, and rabbits are limited to a maximum of one animal per one square foot of structure used to house such animals, up to a maximum of 2000 square feet; provided that this maximum structure size limit shall not apply in rural, forestry, or agricultural zones.

e. Hamsters, nutria and chinchilla are limited to a maximum of one animal per square foot of structure used to house such animals, up to a maximum of 2000 square feet~~; provided that this maximum structure size limit shall not apply in rural, forestry, or agricultural zones~~.

f. Mink and fox are permitted only on sites having a minimum area of five acres.

g. Beekeeping is limited as follows:

(1) Beehives are limited to 50 on sites less than five acres;

(2) The number of beehives shall not be limited on sites of five acres or greater;

(3) Colonies shall be maintained in movable-frame hives at all times;

(4) Adequate space shall be provided in each hive to prevent overcrowding and swarming;

(5) Colonies shall be requeened following any swarming or aggressive behavior;

(6) All colonies shall be registered with the King County Extension agent prior to April 1st of each year, on a state registration form acceptable to the county; and

(7) Abandoned colonies, diseased bees, or bees living in trees, buildings, or any other space except in movable-frame hives shall constitute a public nuisance, and shall be abated as set forth in ~~K.C.C.~~ISDC 21A.50, Enforcement;

3. Kennels and catteries are subject to the following requirements:

a. For kennels located on residential zoned sites:

(1) The minimum site area shall be five acres; and

(2) Structures housing animals and outdoor animal runs shall be a minimum distance of 100 feet from property lines abutting residential zones;

b. For kennels located on non-residential zoned sites, run areas shall be completely surrounded by an eight foot solid wall or fence, and be subject to the requirements in K.C.C. 11.04.060; and

c. Catteries shall be on sites of 35,000 square feet or more, and buildings used to house cats shall be a minimum distance of 50 feet from property lines abutting residential zones. ~~(Ord. 11157 § 27, 1993: Ord. 10870 § 530, 1993).~~

21A.30.030 ~~Animal regulations - Livestock - Purpose. The primary purpose of sections 21A.30.040 - .075 is to support the raising and keeping of livestock in the county in a manner that minimizes the adverse impacts of livestock on the environment particularly with regard to their impacts on water quality and salmonid fisheries habitat in King County watersheds. Maintaining and enhancing the viability of fisheries, livestock-raising and farming are essential to the long-term economic vitality, recreation opportunities and quality of life in rural and resource lands of King County. The following sections establish regulations which set livestock densities and require implementation of best management practices for minimizing non-point pollution from livestock in a manner that recognizes the need for integrated resource management within King County watersheds. They are intended to be consistent with livestock welfare; however, these concerns are more appropriately addressed through K.C.C. 11.04. (Ord. 11168 § 1, 1993).~~ Not Used.

21A.30.040 ~~Animal regulations - Livestock - Densities. The raising, keeping, breeding or fee boarding of livestock are subject to K.C.C. 11.04, Animal Control Regulations, and the following requirements:~~

~~A. The minimum lot size on which large livestock may be kept shall be 20,000 square feet, provided that the amount of site area available for use by the livestock may be less than 20,000 square feet and provided further that the portion of the total lot area used for confinement or grazing meets the requirements of this section.~~ Not Used

~~B. The maximum number of livestock shall be as follows:~~

~~1. Commercial dairy farms in full compliance with a Washington State Department of Ecology NPDES general or special use permit - as consistent with the permit requirements. Otherwise, K.C.C. 21A.30.040B.3 applies. Commercial dairies shall have 5 years from the adoption of this section to either comply with the state permit requirements or come into compliance with Ordinance 11168.~~

~~2. Six resident animal units per gross acre in stables, barns and other livestock operations with covered confinement areas, provided that no more than three animal units per gross acre are allowed to use uncovered grazing or confinement areas on a full time basis, and the standards in K.C.C. 21A.30.060 are met or a farm management plan is implemented and maintained pursuant to Ordinance 11168; provided further that higher densities may be allowed subject to the conditional use permit process to confirm compliance with the management standards. This conditional use permit process is not required for existing operations which operate with higher densities, provided the standards in Ordinance 11168 are met or a farm management plan is implemented for such operations.~~

~~3.(a) For all large livestock not covered by paragraph 1. or 2. above, three animal units per gross acre of vegetated site area, provided that the standards in K.C.C. 21A.30.060 are met or a farm management plan is implemented and maintained pursuant to Ordinance 11168.~~

~~[Editor's Note: The following paragraph (a) (adopted by Ordinance 10870) was not repealed by Ordinance 11168 which adopted the immediately preceding paragraph (a)]~~

~~(a) if a farm management plan is implemented and maintained as or, in the alternative, all of the management standards of section K.C.C. 21A.30.060 are met, three horse, cows or similarly sized animals per gross acre of total site area, provided further that two ponies shall be counted as being equivalent to one horse and that miniature horses shall be treated as small livestock subject to paragraph 4. below.~~

~~(b) if paragraph (a) is not met, one animal unit per two acres of vegetated area, provided that the standards for storage and handling of manure, as set out in Section 3D of this section, are met;~~

~~4. For purposes of these regulations, an animal unit shall consist of one adult horse or bovine, two ponies, five small livestock, or equivalent thereof (excluding sucklings), provided that miniature horses and feeder calves (up to one year of age) shall be considered small livestock.~~

~~5. The 1990 sensitive areas ordinance exemption from the fencing requirements for the Snoqualmie river floodplain shall continue in effect, provided that farm management plans which minimize livestock impacts on the Snoqualmie river are implemented for properties in the floodplain. (Ord. 11168 § 2, 1993: Ord. 11157 § 28, 1993: Ord. 10870 § 532, 1993).~~

21A.30.045 ~~Animal regulations - Livestock - Farm management plans.~~

~~A. To achieve the maximum density allowances using a farm management (conservation) plan, the plan must be developed according to the following criteria:~~Not Used.

~~1. The plan must be developed by the King Conservation District, unless the Livestock Oversight Committee certifies other qualified persons or companies to prepare such plans.~~

~~2. The plan shall require site-specific management measures for minimizing non-point pollution from agricultural activities including but not limited to:~~

~~a. livestock watering, wetland and stream corridor management;~~

~~b. grazing and pasture management;~~

~~c. confinement area management~~

~~d. manure management~~

~~3. The plan shall be implemented within a timeframe established in the plan and maintained such that non-point pollution attributable to livestock-keeping is minimized.~~

~~4. A monitoring plan shall be developed as part of the farm management plan, and implemented to demonstrate no significant impact to water quality and salmonid fisheries habitat. Monitoring data shall be available to the Livestock Oversight Committee.~~

~~B. Farm management plans (FMPs) shall, at a minimum:~~

~~1. Generally seek to achieve a 25 foot buffer of diverse, mature vegetation between grazing areas and the ordinary high water mark of all class 1 and 2 streams and any naturally occurring pond and the wetland edge of any class 1 or 2 wetland on the site, using buffer averaging where necessary to accommodate existing structures. No buffer for class 1 or 2 streams shall be less than 10 feet. The plan must include best management practices which avoid having manure accumulate in or within 10 feet of class 3 streams; provided that forested lands being cleared for grazing areas shall comply with the sensitive areas ordinance setbacks for class 1, 2 and 3 streams and class 1 and 2 wetlands.~~

~~2. Assure that drainage ditches on the site do not channel animal waste to such streams and wetlands.~~

~~3. Achieve an additional 20 foot buffer downslope of any confinement areas within 200 feet of class 1 and 2 streams. This requirement may be waived for existing confinement areas on lots of 2.5 acres or less in size if~~

~~a. A minimum buffer of 25 feet of diverse, mature vegetation is achieved;~~

~~b. Manure within the confinement area is removed daily during the winter season (October 15 to April 15), and stored per K.C.C. 21A.30.060D;~~

~~c. Additional BMPs, as recommended by the KCD, are implemented and maintained.~~

~~4. Include a schedule for implementation.~~

~~C. A copy of the final plans shall be provided to the clerk of the council within 60 days of completion.~~

~~D. The completed plan may be appealed to the zoning and subdivision examiner pursuant to the provisions of K.C.C. 20.24.080. The appeal must be filed within 30 days of being received by the clerk. Appeals may be filed only by the property owner or four members of the Livestock Oversight Committee. Any plan not appealed shall constitute primae facie evidence of compliance with the regulatory provisions of K.C.C. 9.12.035. (Ord. 11168 § 3, 1993).~~

21A.30.060 ~~Animal regulations - Livestock - Management standards. Property owners with farms containing large livestock at densities greater than 1 animal unit per 2 acres, and/or small livestock at densities greater than 5 animals per acre are not required to follow an FMP if said owners adhere to the following management standards. This section shall apply as long as farm practices do not result in violation of any federal, state or local water quality standards.~~Not Used.

~~A. Livestock Watering, Wetland and Stream Corridor Management.~~

~~To minimize livestock access to streams, property owners shall utilize the following livestock watering options:~~

~~1. The preferred option shall be a domestic water supply, stock watering pond, roof runoff collection system, or approved pumped supply from the stream so that livestock are not required to enter streams for their water supply.~~

~~2. Livestock access to class 1 and 2 streams and their buffers shall be limited to stream crossing and watering points which have been addressed by a crossing or watering point plan designed to SCS/KCD specifications which shall prevent free access along the length of the streams.~~

~~a. Fencing shall be used as necessary to prevent livestock access to class 1 and 2 streams.~~

~~b. Bridges may be used in lieu of stream crossings, provided that piers and abutments shall not be placed within the ordinary high water mark or top-of-bank, whichever is greater. Bridges shall be designed to allow free flow of flood waters and shall not diminish the flood carrying capacity of the stream; these bridges may be placed without a county building permit, provided that such permit waiver shall not constitute any assumption of liability by the county with regard to such bridge or its placement. The waiver of county building permit requirements does not constitute a waiver from other required agency permits.~~

~~B. Grazing and Pasture Management.~~

~~1. Existing grazing areas not addressed by K.C.C. 21A.24 shall maintain a vegetative buffer of 50 feet from any naturally occurring pond, wetland edge of a class 1 or 2 wetland (except those wetlands meeting the definition of grazed wet meadows), or the ordinary high water mark of a class 1 or 2 stream.~~

~~2. Forested lands being cleared for grazing areas shall comply with the sensitive areas ordinance setbacks for class 1, 2 and 3 streams, and class 1 and 2 wetlands.~~

~~3. The grazing area buffer may be reduced to 25 feet where a 25-foot buffer of diverse, mature vegetation already exists. This buffer reduction may not be used when forested lands are being cleared for grazing areas.~~

~~4. Fencing shall be used to establish and maintain the buffer.~~

~~5. Fencing installed pursuant to the 1990 SAO prior to the effective date of the ordinance codified in this section at setbacks other than those specified in paragraphs B1 and B2 shall be deemed to constitute compliance with those requirements.~~

~~6. Grazing areas within 200 feet of a class 1 or 2 stream or wetland shall not be plowed during the rainy season (October 1 through April 15).~~

~~7. Grazing areas may extend to the property line, provided that class 1 or 2 streams and wetlands adjacent to the property line are buffered in accordance with K.C.C. 21A.30.060B1, B2 or B3.~~

~~C. Confinement Area Management.~~

~~1. In addition to the buffers in subsection B1 and B2 above, confinement areas located within 200 feet of any class 1 or 2 streams, wetlands or drainageways shall:~~

~~a. Have a 20-foot wide vegetative filter strip downhill from the confinement area, consisting of heavy grasses or other ground cover with high stem density and which may also include tree cover;~~

~~b. Not be located in any class 1 or 2 stream or wetland buffer area required by the sensitive areas ordinance in effect at the time the confinement area is built, or within 50 feet of any naturally occurring pond, wetland edge of any class 1 or 2 wetland or the ordinary high water mark of any class 1 or 2 stream. Fencing shall be used to establish and maintain the buffer. Existing confinement areas which do not meet these requirements shall be modified as necessary to provide the buffers specified herein within five years of the effective date of the ordinance codified in this section, provided further that the footprint of existing buildings need not be so modified;~~

~~c. Have roof drains of any buildings in the confinement area diverted away from the confinement area.~~

~~2. Confinement areas may extend to the property line, provided that streams and wetlands adjacent to the property line are buffered in accordance with K.C.C. 21A.30.060C1.~~

~~D. Manure Management.~~

~~1. Manure storage areas shall be managed as follows:~~

~~a. Surface flows and roof runoff shall be diverted away from manure storage areas.~~

~~b. During the winter months (October 15 to April 15), all manure stockpiled within 200 feet uphill of any class 1 or 2 stream or wetland shall be covered in a manner that excludes precipitation and allows free flow of air to minimize fire danger; or, in the alternative, shall be placed in an uncovered concrete bunker or manure lagoon or held for pickup in a dumpster, vehicle or other facility designed to prevent leachate from reaching any streams or any class 1 or 2 wetlands. Concrete bunkers shall be monitored quarterly for the first two years after installation, then annually unless problems were identified in the first two years, in which case quarterly monitoring shall continue and appropriate adjustments shall be made.~~

~~c. Manure shall be stored in a location that avoids having runoff from the manure enter streams or wetlands. Manure piles shall not be closer than 50 feet uphill from any wetland edge, the ordinary high water mark of any stream, or any ditch to which the topography would generally direct runoff from the manure, nor within any stream buffer.~~

~~2. Manure shall be spread on fields only during the growing season, and not on saturated or frozen fields.~~

~~E. Noxious Weeds. None of these standards shall preclude the removal of noxious weeds, provided that such removal is achieved without the use of chemicals or mechanical methods which would be damaging to stream banks or other vegetation in the buffer.~~

~~F. For purposes of this section, "buffer maintenance" means allowing vegetation in the buffer which provides shade for the stream or acts as a filter for storm water entering the stream, other than noxious weeds, to grow to its mature height; provided that grasses in the buffer may be mowed but not grazed. Grading in the buffer is allowed only for establishment of watering and crossing points, or for other activities permitted pursuant to the sensitive areas ordinance, with the appropriate permits.~~

~~G. Properties which have existing fencing already installed at distances other than those specified in these standards, and for which farm management plans have been developed based on the existing fencing locations, shall be deemed to be in compliance with the fencing requirements of these standards.~~

H. Buffer areas shall not be subject to public access, use or dedication by reason of the establishment of such buffers. (Ord. 12786 § 4, 1997: Ord. 11168 § 4, 1993: Ord. 10870 § 534, 1993).

21A.30.062 Animal regulations - Livestock - Building requirements. A. In residential zones, fee boarding of livestock other than in a legally established stable shall only be as an accessory use to a resident on the subject property; and

B. A barn or stable may contain a caretaker's accessory living quarters. ~~(Ord. 12786 § 5, 1997: Ord. 11168 § 5, 1993).~~

21A.30.064 ~~Animal regulations - Livestock - Livestock oversight committee.~~ Not Used.

~~A. Within 90 days of adoption of this ordinance, King County shall establish a Livestock Oversight Committee comprised of representatives from county, state and federal agencies with expertise in the area of water quality and habitat impact of livestock, affected tribes, commercial and hobby farms, consumers and the environmental community. The Livestock Oversight Committee shall have a maximum of eleven members.~~

~~B. The Livestock Oversight Committee shall:~~

~~1. Oversee funding mechanisms and recommend to the county council funding schedules for programs that implement and evaluate the effectiveness of farm management plans and management standards, including but not limited to implementation assistance funding, education and monitoring, as provided for in this section;~~

~~2. Monitor and review farm management plans, by watershed basin, for consistency with the objectives of this chapter;~~

~~3. Provide guidance regarding changes required to ensure that goals of this legislation are being met;~~

~~4. Review the efficacy of performance standards and management measures, and determine how and where they could best be applied in King County; and~~

~~5. Provide a link between government experts and the livestock owners who must implement this legislation.~~

~~6. Certify the use of experts to prepare farm management plans, if a property owner chooses not to work with the King Conservation District.~~

~~7. Recommend to the District the use of additional expertise such as fisheries biologists in the development of farm management plans.~~

~~C. The Livestock Oversight Committee shall be provided professional staff and experts in the field to ensure that the best information is available to King County council as the elements of the livestock density legislation are implemented, and shall be staffed by the cooperative extension office.~~

~~D. The Livestock Oversight Committee shall, within 180 days of adoption of Ordinance 11168, make recommendations to the metropolitan King County council as to the need for additional funding mechanisms to support the work of the committee, implementation of livestock management techniques, and livestock waste management solutions.~~

~~E. King County shall utilize as high a percentage of any funds available as possible to provide cost-sharing assistance to farmers in implementation of farm management plans (per K.C.C. 21A.30.050). The amount to be used for implementation shall be determined by the Livestock Oversight Committee and approved by the metropolitan King County council. Assistance to farmers should be allocated to encourage early implementation, by providing greater support to farmers who participate in the first years of the program, and less support in the out years. If follow-up monitoring or a complaint indicates that enforcement procedures are required, and it is determined that farm management plans have not been implemented, funding will be withdrawn and repayment required.~~

~~F. Monitoring is a critical element in the evaluation of the effectiveness of farm management practices in minimizing non-point pollution in streams and wetlands. Within 180 days of adoption of Ordinance 11168, the Livestock Oversight Committee shall develop and implement a management practice monitoring strategy, with the assistance of the King Conservation District, Soil Conservation Service, the metropolitan services department/water quality division, the surface water management division and affected tribes.~~

~~G. King County shall utilize a percentage of any funds raised by one of the mechanisms developed pursuant to this section to monitor farm management plans and management standards, to provide information regarding the efficacy of the management measures being implemented. This information shall be used to demonstrate the value of such plans to other farmers, and shall be reported to the Livestock Oversight Committee, for use in development of improved standards for the livestock density legislation.~~

~~H. Both the Livestock Oversight Committee and the conservation district shall be subject to audit to determine where performance efficiencies and improvements can be achieved. (Ord. 11168 § 6-8, 1993).~~

21A.30.066 ~~Animal regulations - Livestock - Education and enforcement.~~ Not Useed.

~~A. Education. Enforcement of these livestock standards shall initially~~

~~emphasize achieving compliance with the standards as the primary objective, rather than the collection of fines or penalties. Fines or penalties are appropriate when a property owner or livestock operator has been advised of necessary corrective actions, and has not made those corrections. Where violations of the standards do occur, and such violations are directly linked to identified hazards or the discharge of prohibited contaminants, as enumerated in K.C.C. 9.12.025, code enforcement must emphasize immediate correction of the practices resulting in the hazard or prohibited discharge. B. Both the property owner and any renter or lessee of the property, hereinafter referred to "livestock operator", shall be held responsible for compliance with these standards.~~

~~C. Primae facie evidence. Establishment and adherence to a farm management plan as allowed by K.C.C. 21A.30.050 or the management standards provided by K.C.C. 21A.30.060 shall be prima facie proof of compliance with the regulatory provisions of K.C.C. 9.12.035.~~

~~D. Violations of specific standards. The department of development and environmental services shall be responsible for enforcement of the standards set out in this chapter. The surface water management division shall be responsible for enforcement of water quality violations pursuant to K.C.C. Chapter 9.12 for prohibited discharges and hazards. If a specific standard identified in this chapter is not being adhered to, the operator and owner shall be given notice of non-compliance. The notice shall specify what actions must be taken to bring the property into compliance. The operator and owner shall be given 45 days in which to adhere to the management standards of K.C.C. 21A.30.060, or establish a farm management plan pursuant to K.C.C. 21A.30.050 as the owner and/or livestock operator may elect for the purpose of compliance. Should the owner and/or livestock operator fail to bring the property into compliance with the standards, the county, after notice, may commence abatement proceedings and impose civil fines 30 days thereafter, to the extent necessary for compliance. Thereafter, upon exhaustion of any appeals, failure of the operator and owner to comply with any continuing order to abate, the operator and owner shall be subject to civil and criminal penalties, and other procedures, as set forth in this title and K.C.C. Title 23 Enforcement. (Ord. 11168 § 9, 1993).~~

21A.30.067 ~~Livestock management - Information.~~Not Used. ~~Within 180 days of adoption of Ordinance 11168, King County shall publish and distribute information packets to all affected property owners, describing the ordinance in detail. In particular, the information packets shall outline what will be expected of King County residents who maintain livestock, including timelines, funding sources, and phone numbers and addresses of resource agencies. (Ord. 11168 § 10, 1993).~~

21A.30.068 ~~Livestock management- waste disposal~~Not Used. ~~Within 180 days of adoption of this ordinance, the solid waste division shall develop a pilot program to investigate potential markets for livestock waste from both commercial and non-commercial operations including, but not limited to, as a replacement to chemical fertilizers in King County parks (flowerbeds and fields); for use in commercial silviculture and nursery operations; for use on private property (similar to Woodland Park Zoo's "Zoodoo" program); and for use in publicly or privately operated composting stations. (Ord. 11168 § 11, 1993).~~

21A.30.070 ~~Existing livestock operations.~~ Not Used. ~~All existing livestock operations shall either implement a farm management plan or meet the management standards in K.C.C. 21A.30.060, within five years of the adoption~~

~~date of this title: existing buildings are exempt from this provision. State standards for fecal coliform, turbidity, and nutrients must be met within five years from the date of adoption of this ordinance. The metropolitan services department/water quality division shall monitor stream systems for progress in meeting this goal, and report annually to the council. (Ord. 11168 § 13, 1993; Ord. 10870 § 535, 1993).~~

21A.30.075 ~~Interdisciplinary teams~~Not Used. ~~In order to ensure that livestock standards and management plans are customized as much as possible to the stream conditions in each of the~~

~~various streams, the county executive will, in cooperation with the Washington State Department of Fisheries and the Muckleshoot Indian Tribe, establish interdisciplinary teams consisting of 3 members each, with expertise in fisheries, water quality and animal husbandry, to make specific recommendations to the Conservation District and livestock owners adjacent to the streams with regard to buffer needs throughout the parts of each stream which have livestock operations adjoining such streams. The teams shall take into account the recommendations of the adopted Basin Plans, and shall work with the stream steward for the stream being evaluated to develop the recommendations. The recommendations shall be reported to the Livestock Oversight Committee, which shall assist in the dissemination of the recommendations to owners in the basin. These teams shall work initially on those stream systems in which specific problems have been identified and are believed to be livestock related: Newaukum Creek, Soos Creek, the Upper Green River and Bear Creek. (Ord. 11168 § 14, 1993).~~

21A.30.080 Home occupation. Residents of a dwelling unit may conduct one or more home occupations as accessory activities, provided:

A. The total area devoted to all home occupation(s) shall not exceed twenty percent of the floor area of the dwelling unit. Areas with attached garages and storage buildings shall not be considered part of the dwelling unit for purposes of calculating allowable home occupation area but may be used for storage of goods associated with the home occupation;

B. In ~~urban~~ residential zones, all the activities of the home occupation(s) shall be conducted indoors, except for those related to growing or storing of plants used by the home occupation(s);

C. No more than one non-resident shall be employed by the home occupation(s);

D. The following activities shall be prohibited in ~~urban~~ residential zones only:

1. Automobile, truck and heavy equipment repair;
2. Autobody work or painting;
3. Parking and storage of heavy equipment; and
4. Storage of building materials for use on other properties;

E. In addition to required parking for the dwelling unit, on-site parking shall be provided as follows:

1. One stall for a non-resident employed by the home occupation(s); and
2. One stall for patrons when services are rendered on-site;

F. Sales shall be limited to:

1. Mail order sales; ~~and~~
2. Telephone sales with off-site delivery;<u>and</u>
3. <u>Internet sales.</u>

G. Services to patrons shall be arranged by appointment or provided off-site;

H. The home occupation(s) may use or store a vehicle for pickup of materials used by the home occupation(s) or the distribution of products from the site, provided:

1. No more than one such vehicle shall be allowed;
2. Such vehicle shall not park within any required setback areas of the lot or on adjacent streets; and
3. Such vehicle shall not exceed a weight capacity of one ton; and

I. The home occupation(s) shall not use electrical or mechanical equipment that results in:

1. A change to the occupancy type of the structure(s) used for the home occupation(s);
2. Visual or audible interference in radio or television receivers, or electronic equipment located off-premises; or
3. Fluctuations in line voltage off-premises.

J. Uses not allowed as home occupations may be allowed as a home industry pursuant to ~~K.C.C.~~<u>ISDC</u> 21A.30. ~~(Ord. 11621 § 93, 1994: 10870 § 536, 1993).~~

21A.30.090 Home industry. A resident may establish a home industry as an accessory activity, provided:

A. The site area shall be no less than one acre;

B. The area of the home industry shall not exceed 50 percent of the floor area of the dwelling unit. Areas within attached garages and storage buildings shall not be considered part of the

dwelling unit for purposes of calculating allowable home industry area but may be used for storage of goods associated with the home occupation;

C. No more than four non-residents shall be employed in a home industry;

D. In addition to required parking for the dwelling unit, on-site parking shall be provided as follows:

1. One stall for each non-resident employee of the home industry; and
2. One stall for customer parking;

E. Additional customer parking shall be calculated for areas devoted to the home industry at the rate of one stall per:

1. 1,000 square feet of building floor area; and
2. 2,000 square feet of outdoor work or storage area;

F. Sales shall be limited to items produced on-site, except for items collected, traded and occasionally sold by hobbyists, such as coins, stamps, and antiques;

G. Ten feet of Type I landscaping shall be provided around portions of parking and outside storage areas which are otherwise visible from adjacent properties or public rights-of-way; and

H. The ~~zoning adjustor~~Director shall ensure compatibility of the home industry by:

1. Limiting the type and size of equipment used by the home industry to those which are compatible with the surrounding neighborhood;
2. Providing for setbacks or screening as needed to protect adjacent residential properties;
3. Specifying hours of operation;
4. Determining acceptable levels of outdoor lighting; and
5. Requiring sound level tests for activities determined to produce sound levels which may be excessive.~~in excess of those set forth in K.C.C. 12.88. (Ord. 10870 § 537, 1993).~~

21A.30.200 Severability. ~~If any provision of this section or its application to any person or circumstance is held invalid, the remainder of the section or the application of the provision to other persons or circumstances is not affected. (Ord. 11168 § 12, 1993).~~Not used.

followed by blank

Chapter 21A.32
GENERAL PROVISIONS
NONCONFORMANCE, TEMPORARY USES, AND RE-USE OF FACILITIES

Sections:

21A.32.010 Purpose.
21A.32.020 Nonconformance - Applicability.
21A.32.025 Nonconformance - Creation, continuation, and forfeiture of nonconformance status.
21A.32.040 Nonconformance - Abatement of illegal use, structure or development.
21A.32.045 Nonconformance - Re-establishment of discontinued nonconforming use, or damaged or destroyed nonconforming structure or site improvement.
21A.32.055 Nonconformance - Modifications to nonconforming use, structure, or site improvement.
21A.32.065 Nonconformance - Expansions of nonconforming uses, structures, or site improvements.
21A.32.075 Nonconformance - Required findings.
21A.32.085 Nonconformance - Residences.
21A.32.100 Temporary use permits - Uses requiring permits.
21A.32.110 Temporary use permits - Exemptions to permit requirement.
21A.32.120 Temporary use permits - Duration and frequency.
21A.32.130 Temporary use permits - Parking.
21A.32.140 Temporary use permits - Traffic control.
21A.32.150 Temporary construction buildings.
21A.32.160 Temporary construction residence.
21A.32.170 Temporary mobile home for medical hardship.
21A.32.180 Temporary real estate offices.
21A.32.190 Temporary school facilities.
21A.32.200 Re-use of facilities - General standards.
21A.32.210 Re-use of facilities - Re-establishment of closed public school facilities.
21A.32.220 Re-use of facilities - Standards for conversion of historic buildings.
21A.32.230 ~~Public nuisance - prohibited activities.~~

Not used.

21A.32.010 Purpose. The purposes of this chapter are to:

A. Establish the legal status of a nonconformance by creating provisions through which a nonconformance may be maintained, altered, reconstructed, expanded or terminated;

B. Provide for the temporary establishment of uses that are not otherwise permitted in a zone and to regulate such uses by their scope and period of use; and

C. Encourage the adaptive re-use of existing public facilities which will continue to serve the community, and to ensure public review of redevelopment plans by allowing:

1. Temporary re-use of closed public school facilities retained in school district ownership, and the reconversion of a temporary re-use back to a school use;

2. Permanent re-use of surplus nonresidential facilities (e.g. schools, fire stations, government facilities) not retained in school district ownership; or

3. Permanent re-use of historic structures listed on the National Register or designated as county landmarks. ~~(Ord. 10870 § 538, 1993).~~

21A.32.020 Nonconformance - Applicability. A. ~~With the exception of nonconforming extractive operations identified in K.C.C. 21A.22, all~~ All nonconformances shall be subject to the provisions of this chapter.

B. The provisions of this chapter do not supersede or relieve a property owner from compliance with:

1. The requirements of the Uniform Building and Fire Codes; or

2. The provisions of this code beyond the specific nonconformance addressed by this chapter. ~~(Ord. 10870 § 539, 1993).~~

21A.32.025 Nonconformance - Creation, continuation, and forfeiture of nonconformance status. Once created pursuant to ~~K.C.C.~~ ISDC 21A.06.800, a nonconformance may be continued in a manner consistent with the provisions of this chapter. However, nonconformance status is forfeited if the nonconformance is discontinued beyond the provisions of ~~K.C.C.~~ISDC 21A.32.045. Once nonconformance status is forfeited, the nonconformance shall not be re-established. ~~(Ord. 13130 § 2, 1998).~~

21A.32.040 Nonconformance - Abatement of illegal use, structure or development. Any use, structure or other site improvement not established in compliance with use and development standards in effect at the time of establishment shall be deemed illegal and shall be discontinued or terminated and subject to removal pursuant to the provisions of ~~K.C.C.~~ISDC Title 23. ~~(Ord. 10870 § 541, 1993).~~

21A.32.045 Nonconformance - Re-establishment of discontinued nonconforming use, or damaged or destroyed nonconforming structure or site improvement. A nonconforming use which has been discontinued or a nonconforming structure or site improvement which has been damaged or destroyed, may be re-established or reconstructed if:

A. The nonconforming use, structure, or site improvement which previously existed is not expanded;

B. A new nonconformance is not created; and

C. The use has not been discontinued for more than twelve months prior to its re-establishment, or the nonconforming structure or site improvement is reconstructed pursuant to a complete permit application submitted to the department within twelve months of the occurrence of damage or destruction. ~~(Ord. 13130 § 3, 1998).~~

21A.32.055 Nonconformance - Modifications to nonconforming use, structure, or site improvement. Modifications to a nonconforming use, structure, or site improvement may be reviewed and approved by the D~~d~~epartment pursuant to the code compliance review process of ~~K.C.C.~~ISDC 21A.42.010 provided that:

A. The modification does not expand any existing nonconformance; and

B. The modification does not create a new type of nonconformance. ~~(Ord. 13130 § 4, 1998).~~

21A.32.065 Nonconformance - Expansions of nonconforming uses, structures, or site improvements. A nonconforming use, structure, or site improvement may be expanded as follows:

A. The department may review and approve, pursuant to the code compliance process of ~~K.C.C.~~ISDC 21A.42.010, an expansion of a nonconformance provided that:

1. The expansion shall conform to all other provisions of this title, except that the extent of the project-wide nonconformance in each of the following may be increased up to 10 percent:

a. building square footage,

b. impervious surface,

c. parking, or

d. building height.

2. No subsequent expansion of the same nonconformance shall be approved under this subsection if the cumulative amount of such expansion exceeds the percentage prescribed in subsection A.1.

B. A special use permit shall be required for expansions of a nonconformance within a development authorized by an existing special use or unclassified use permit if the expansions are not consistent with the provisions of subsection A.

C. A conditional use permit shall be required for expansions of a nonconformance:

1. Within a development authorized by an existing planned unit development approval, or

2. Not consistent with the provisions of subsections A and B of this section.

D. ~~No expansion shall be approved that would allow for urban growth outside the urban growth area, in conflict with King County Comprehensive Plan rural and natural resource policies and constitute impermissible urban growth outside an urban growth area. (Ord. 13130 § 5, 1998).~~ Not Used.

21A.32.075 Nonconformance - Required findings. Modifications or expansions approved by the D~~d~~epartment shall be based on written findings that the proposed:

Modification or expansion of a nonconformance located within a development governed by an existing conditional use permit, special use permit, unclassified use permit, or planned unit development shall provide the same level of protection for and compatibility with adjacent land uses as the original land use permit approval. ~~(Ord. 13130 § 6, 1998).~~

21A.32.085 Nonconformance - Residences. Any residence nonconforming relative to use may be expanded, after review and approval through the code compliance process set forth in ~~K.C.C.~~ ISDC 21A.42.010, subject to all other applicable codes besides those set forth in this chapter for nonconformances. ~~(Ord. 13130 § 12, 1998).~~

21A.32.100 Temporary use permits - Uses requiring permits. Except as provided by ~~K.C.C.~~ ISDC 21A.32.110, a temporary use permit shall be required for:

A. Uses not otherwise permitted in the zone that can be made compatible for periods of limited duration and/or frequency; or

B. Limited expansion of any use that is otherwise allowed in the zone but which exceeds the intended scope of the original land use approval. ~~(Ord. 10870 § 547, 1993).~~

21A.32.110 Temporary use permits - Exemptions to permit requirement.

A. The following uses shall be exempt from requirements for a temporary use permit when located in the ~~RB,~~ CB, NB, or O, ~~or I~~ zones for the time period specified below:

1. Uses not to exceed a total of thirty days each calendar year:
   a. Christmas tree lots;
   b. Fireworks stands; and
   c. Produce stands.
2. Uses not to exceed a total of fourteen days each calendar year:
   a. Amusement rides, carnivals, or circuses;
   b. Community festivals; and
   c. Parking lot sales.

B. Any use not exceeding a cumulative total of two days each calendar year shall be exempt from requirements for a temporary use permit.

C. Any community event held in a park and not exceeding a period of seven days shall be exempt from requirements for a temporary use permit.

D. ~~Christmas tree sales not exceeding a total of 30 days each calendar year when located on Rural Area (RA) zoned property with legally established non-residential uses shall be exempt from requirements for a temporary use permit. (Ord. 13022 § 29, 1998; Ord. 12893 § 1, 1997; Ord. 10870 § 548, 1993).~~ Not Used.

21A.32.120 Temporary use permits - Duration and frequency. Temporary use permits shall be limited in duration and frequency as follows:

A. The temporary use permit shall be effective for no more than 180 days from the date of the first event;

B. The temporary use shall not exceed a total of 60 days, provided that this requirement applies only to the days that the event(s) actually take place;

C. The temporary use permit shall specify a date upon which the use shall be terminated and removed; and

D. A temporary use permit shall not be granted for the same temporary use on a property more than once per calendar year provided that a temporary use permit may be granted for multiple events during the approval period. ~~(Ord. 10870 § 549, 1993).~~

21A.32.130 Temporary use permits - Parking. Parking and access for proposed temporary uses shall be approved by the ~~county~~City. (Ord. 10870 § 550, 1993).

21A.32.140 Temporary use permits - Traffic control. The applicant for a proposed temporary use shall provide any parking/traffic control attendants as specified by the ~~King County department of public safety~~Sammamish Police Chief. (Ord. 10870 § 551, 1993).

21A.32.150 Temporary construction buildings. Temporary structures for storage of tools and equipment, or for supervisory offices may be permitted for construction projects, provided that such structures are:

A. Allowed only during periods of active construction; and

B. Removed within 30 days of project completion or cessation of work. ~~(Ord. 10870 § 552, 1993).~~

21A.32.160 Temporary construction residence. A. A mobile home may be permitted on a lot as a temporary dwelling for the property owner, provided a building permit for a permanent dwelling on the site has been obtained.

B. The temporary mobile home permit shall be effective for a period of 12 months. The permit may be extended for one additional period of 12 months if the permanent dwelling is constructed with a finished exterior by the end of the initial approval period.

C. The mobile home shall be removed within 90 days of:

1. The expiration of the temporary mobile home permit; or

2. The issuance of a certificate of occupancy for the permanent residence, whichever occurs first. ~~(Ord. 10870 § 553, 1993).~~

21A.32.170 Temporary mobile home for medical hardship.

A. A mobile home may be permitted as a temporary dwelling on the same lot as a permanent dwelling, provided:

1. The mobile home together with the permanent residence shall meet the setback, height, building footprint, and lot coverage provisions of the applicable zone; and

2. The applicant submits with the permit application a notarized affidavit that contains the following:

a. Certification that the temporary dwelling is necessary to provide daily care, as defined in ~~K.C.C.~~ISDC 21A.06.262;

b. Certification that the primary provider of such daily care will reside on-site;

c. Certification that the applicant understands the temporary nature of the permit, subject to the limitations outlined in subsections B and C of this section;

d. Certification that the physician's signature is both current and valid; and

e. Certification signed by a physician that a resident of the subject property requires daily care, as defined in ~~K.C.C~~ISDC. 21A.06.262.

B. Temporary mobile home permits for medical hardships shall be effective for 12 months. Extensions of the temporary mobile home permit may be approved in 12-month increments subject to demonstration of continuing medical hardship in accordance with the procedures and standards set forth in subsection A of this section.

C. The mobile home shall be removed within 90 days of:

1. The expiration of the temporary mobile home permit; or

2. The cessation of provision of daily care. ~~(Ord. 12523 § 4, 1996: Ord. 10870 § 554, 1993).~~

21A.32.180 Temporary real estate offices. One temporary real estate office may be located on any new residential development, provided that activities are limited to the initial sale or rental of property or units within the development. The office use shall be discontinued within one year of recording of a short subdivision or issuance of a final certificate of occupancy for an apartment development, and within two years of the recording of a formal subdivision. ~~(Ord. 13095 § 1, 1998: Ord. 10870 § 555, 1993).~~

21A.32.190 Temporary school facilities. Temporary school structures may be permitted during construction of new school facilities or during remodeling of existing facilities, provided that such structures are:

A. Allowed only during periods of active construction or remodeling;

B. Do not expand the student capacity beyond the capacity under construction or remodeling; and

C. Removed within 30 days of project completion or cessation of work. ~~(Ord. 10870 § 556, 1993).~~

21A.32.200 Re-use of facilities - General standards. The interim or permanent re-use of surplus nonresidential facilities in residential zoned areas shall require that no more than 50 percent of the original floor area be demolished for either permanent or interim re-use of facilities. ~~(Ord. 11621 § 94, 1994: 10870 § 557, 1993).~~

21A.32.210 Re-use of facilities - Re-establishment of closed public school facilities. The re-establishment or reconversion of an interim nonschool use of school facilities back to school

uses shall require a site plan and the issuance of a ~~change of~~conditional use permit. ~~pursuant to K.C.C. 16.04. (Ord. 10870 § 558, 1993).~~

21A.32.220 Re-use of facilities - Standards for conversion of historic buildings. In order to insure that significant features of the property are protected pursuant to ~~K.C.C.~~ISDC 20.62, the following standards shall apply to conversion of historic buildings:

A. Gross floor area of building additions or new buildings required for the conversion shall not exceed 20 percent of the gross floor area of the historic building, unless allowed by the zone;

B. Conversions to apartments shall not exceed one dwelling unit for each 3,600 square feet of lot area, unless allowed by the zone; and

C. Any construction required for the conversion shall require ~~certification of appropriateness from the King County Landmark Commission~~approval of the City Council. ~~(Ord. 10870 § 559, 1993).~~

21A.32.230 ~~Public nuisance - Prohibited activities. It is unlawful for any person to keep, maintain or deposit on any property in the county a public nuisance including, but not limited to, the following:~~Not Used.

~~A. Open storage of rubbish or junk including, but not limited to, refuse, garbage, scrap metal or lumber, concrete, asphalt, tin cans, tires and piles of earth, not including compost bins.~~

~~B. Combustible material likely to become easily ignited or debris resulting from any fire and which constitutes a fire hazard, as defined in the Uniform Fire Code as adopted by the county pursuant to K.C.C. 17.04.010.~~

~~C. Abandoned vehicles, wrecked, dismantled or inoperative vehicles or remnant parts thereof except as provided in K.C.C. 23.10.040. (Ord. 12024 § 12).~~

blank

Chapter 21A.38
~~GENERAL PROVISIONS~~
PROPERTY - SPECIFIC DEVELOPMENT STANDARDS - ~~/~~
SPECIAL DISTRICT OVERLAYS

Sections:

21A.38.010	Purpose.
21A.38.020	Authority and application.
21A.38.030	Property - Specific development standards - General provisions.
21A.38.040	Special district overlay - General provisions.
21A.38.050	~~Special district overlay - Pedestrian-oriented commercial development.~~Not Used.
21A.38.060	~~Special district overlay - Office/research park development.~~Not Used.
21A.38.070	~~Special district overlay - Urban Planned Development purpose and designation.~~Not Used.
21A.38.080	~~Special district overlay - UPD implementation.~~Not used.
21A.38.090	~~Special district overlay - Economic redevelopment.~~Not Used.
21A.38.100	~~Special district overlay - Commercial/industrial.~~Not Used.
21A.38.110	~~Special district overlay - Fully contained community (FCC) purpose, designation, and implementation.~~Not Used.
21A.38.120	Special district overlay - Wetland management areas.
21A.38.130	~~Special district overlay - Agricultural production buffer.~~Not Used.
21A.38.140	~~Special district overlay - Residential infill.~~Not Used
21A.38.150	~~Special district overlay - Ground water protection.~~Not Used.
21A.38.160	~~Special district overlay - Aviation facilities.~~Not Used
21A.38.170	~~Special district overlay - Urban aquifer protection area.~~Not Used
21A.38.180	~~Special district overlay - Highway-oriented development.~~Not Used.
21A.38.200	Special district overlay - Erosion hazards near sensitive water bodies.
21A.38.210	~~Special district overlay - Heron habitat protection area.~~Not Used.
21A.38.220	~~Special district overlay - Urban stream protection area.~~ Not Used
21A.38.230	~~Special district overlay - Significant Trees.~~Not Used
21A.38.240	~~Special district overlay - Floodplain Density~~Not Used.
21A.38.250	Special district overlay – Beaver Lake Watershed Management Area.
Appendix A	Properties with specific development standards.
Appendix B	Special District Overlay areas.

21A.38.010 Purpose. The purposes of this chapter are to provide for alternative development standards to address unique site characteristics and to address development opportunities which can exceed the quality of standard developments, by:

A. Establishing authority to adopt property-specific development standards for increasing minimum requirements of this title on individual sites; or

B. Establishing special district overlays with alternative standards for special areas designated by ~~community plans or~~ the Interim Comprehensive Plan. ~~(Ord. 12171 § 4, 1996: Ord. 10870 § 574, 1993).~~

21A.38.020 Authority and application. A. This chapter authorizes ~~King County~~the City to increase development standards or limit uses on specific properties beyond the general requirements of this title through property-specific development standards, and to carry out Interim ~~C~~comprehensive ~~P~~plan policies and map designations ~~and community, subarea, or neighborhood plan policies~~ through special overlay districts which supplement

or modify standard zones through different uses, design or density standards or review processes;

B. Property-specific development standards shall be applied to specific properties through either area zoning as provided in ~~K.C.C.~~ISDC 20.12 and 20.16, or reclassifications of individual properties as provided in ~~K.C.C.~~ISDC 20.24 and 21A.44; and

C. Special district overlays shall be applied to specific properties or areas containing several properties through the area zoning process as provided in ~~K.C.C.~~ISDC 20.12 and 20.16. ~~(Ord. 12823 § 2, 1997: Ord. 12809 § 3, 1997: Ord. 12171 § 5, 1996: Ord. 10870 § 575, 1993).~~

21A.38.030 Property - Specific development standards - General provisions.

A. Property-specific development standards, denoted by the zoning map symbol -P after the zone's map symbol or a notation in the SITUS File, shall be established on individual properties through either reclassifications or area zoning. All property-specific development standards are contained in Appendix A of this Chapter, ~~of Ordinance 12824*~~ as currently in effect or hereinafter amended and shall be maintained by the ~~department~~ Department of Community~~development~~ Development ~~and environmental services~~ in the Property Specific Development Conditions ~~notebook~~File. Upon the effective date of reclassification of a property to a zone with a -P suffix, the property-specific development standards adopted thereby shall apply to any development proposal on the subject property subject to county review, including, but not limited to, a building permit, grading permit, subdivision, short subdivision, subsequent reclassification to a potential zone, urban planned development, conditional use permit, variance, and special use permit.

B. Property-specific development standards shall address problems unique to individual properties or a limited number of neighboring properties that are not addressed or anticipated by general minimum requirements of this title or other regulations.

C. Property-specific development standards shall cite the provisions of this title, if any, that are to be augmented, limited, or increased, shall be supported by documentation that addresses the need for such condition(s), and shall include street addresses, tax lot numbers or other clear means of identifying the properties subject to the additional standards. Property-specific development standards are limited to:

1. Limiting the range of permitted land uses;

2. Requiring special development standards for property with physical constraints (e.g. environmental hazards, view corridors);

3. Requiring specific site design features (e.g. building orientation, lot layout, clustering, trails or access location);

4. Specifying the phasing of the development of a site;

5. Requiring public facility site dedications or improvements (e.g. roads, utilities, parks, open space, trails, school sites); or

6. Designating sending and receiving sites for transferring density credits as provided in ~~K.C.C.~~ISDC 21A.36.

D. Property-specific development standards shall not be used to expand permitted uses or reduce minimum requirements of this title. ~~(Ord. 12824 § 21, 1997: Ord. 11621 § 97, 1994: 10870 § 576, 1993).~~

21A.38.040 Special district overlay - General provisions. Special district overlays shall be designated on official area zoning maps and as a notation in the SITUS File, as follows:

A.A special district overlay shall be designated through the area zoning process as provided in ~~K.C.C.~~ISDC 20.12 and 20.16. Designation of an overlay district shall include policies that prescribe the purposes and location of the overlay;

*Available in the office of the City Celerk ~~of the council~~.

B.A special district overlay shall be applied to land through an area zoning process as provided in K.C.C. 20.12 and 20.16 and shall be indicated on the zoning map and as a notation in the SITUS File and shall be designated in Appendix B of ~~Ordinance 12824~~this Chapter as maintained by the D~~d~~epartment of Community ~~development~~ Development and ~~environmental services~~, with the suffix "-SO" following the map symbol of the underlying zone or zones;

C.The special district overlays set forth in this chapter are the only overlays authorized by the code. New or amended overlays to carry out new or different goals or policies ~~shall~~ may be adopted as part of this chapter and be available for use in ~~all appropriate community, subarea or neighborhood planning areas~~the Interim Comprehensive Plan;

D.The special district overlays set forth in this chapter may waive, modify and substitute for the range of permitted uses and development standards established by this title for any use or underlying zone;

E.Unless they are specifically modified by the provisions of this chapter, the standard requirements of this title and other county ordinances and regulations govern all development and land uses within special district overlays; and

F. A special district overlay on an individual site may be modified by property-specific development standards as provided in ~~K.C.C.~~ISDC 21A.38.030. ~~(Ord. 12823 § 3, 1997: Ord. 12809 § 4, 1997: Ord. 12171 § 6, 1996: Ord. 11621 § 98, 1994: 10870 § 577, 1993).~~

21A.38.050 ~~Special district overlay - Pedestrian-oriented commercial development. A. The purpose of the pedestrian-oriented commercial development special district overlay is to provide for high-density, pedestrian-oriented retail/employment uses. Pedestrian-oriented commercial district shall only be established in areas designated within a community, subarea, or neighborhood plan as an urban activity center and zoned CB, RB or O.~~ Not Used.

~~B.Permitted uses shall be those uses permitted in the underlying zone, excluding the following:~~

~~1. Motor vehicle, boat and mobile home dealer;~~

~~2. Gasoline service station;~~

~~3. Drive-through retail and service uses;~~

~~4. Car washes;~~

~~5. Retail and service uses with outside storage, e.g. lumber yards, miscellaneous equipment rental or machinery sales;~~

~~6. Wholesale uses;~~

~~7. Recreation/cultural uses as set forth in K.C.C. 21A.08.040, except parks, sports clubs, theaters, libraries and museums;~~

~~8. SIC Major Group 75 (Automotive repair, services and parking) except 7521 (automobile parking, but excluding tow-in parking lots);~~

~~9. SIC Major Group 76 (Miscellaneous repair services), except 7631 (Watch, clock and jewelry repair);~~

~~10. SIC Major Group 78 (Motion pictures), except 7832 (theater) and 7841 (video tape rental);~~

~~11. SIC Major Group 80 (Health services), except offices and outpatient clinics (801-804);~~
~~12. SIC Industry Group 421 (Trucking and courier service);~~
~~13. Public agency archives;~~
~~14. Self-service storage;~~
~~15. Manufacturing land uses as set forth in K.C.C. 21A.08.080, except 2759 (Commercial printing); and~~
~~16. Resource land uses as set forth in K.C.C. 21A.08.090.~~

~~C. The following development standards shall apply to uses located in pedestrian-oriented commercial overlay districts:~~
~~1. Every use shall be subject to pedestrian-oriented use limitations and street facade development standards (e.g. placement and orientation of buildings with respect to streets and sidewalks, arcades or marquees) identified and adopted through an applicable community, subarea or, neighborhood plan, or the area zoning process;~~
~~2. For properties that have frontage on pedestrian street(s) or routes as designated in an applicable plan or area zoning process, the following conditions shall apply:~~
~~a. main building entrances shall be oriented to the pedestrian street;~~
~~b. at the ground floor (at grade), buildings shall be located no more than 5 feet from the sidewalk or sidewalk improvement, but shall not encroach on the public right-of-way;~~
~~c. building facades shall comprise at least 75% of the total pedestrian street frontage for a property and if applicable, at least 75% of the total pedestrian route frontage for a property;~~
~~d. minimum side setbacks of the underlying zoning are waived;~~
~~e. building facades of ground floor retail, general business service, and professional office land uses that front onto a pedestrian street or route shall include windows and overhead protection;~~
~~f. building facades along a pedestrian street or route, that are without ornamentation or are comprised of uninterrupted glass curtain walls or mirrored glass are not permitted; and~~
~~g. vehicle access shall be limited to the rear access alley or rear access street where such an alley or street exists.~~
~~3. Floor/lot area ratio shall not exceed 5:1, including the residential component of mixed use developments, but not including parking structures;~~
~~4. Building setback and height requirements may be waived, except for areas within fifty feet of the perimeter of any special district overlay area abutting an R-12 or lower density residential zone;~~
~~5. The landscaping requirements of K.C.C. 21A.16 may be waived if landscaping conforms to a special district overlay landscaping plan adopted as part of the area zoning. The overlay district landscaping plan shall include features addressing street trees, and other design amenities (e.g. landscaped plazas or parks);~~
~~6. On designated pedestrian streets, sidewalk width requirements shall be increased to a range of ten to twelve feet wide including sidewalk landscaping and other amenities. The sidewalk widths exceeding the amount required in the King County Road Standards may occur on private property adjoining the public street right-of-way; and~~
~~7. Off-street parking requirements K.C.C. 21A.18 are modified as follows for all nonresidential uses:~~
~~a. No less than one space for every 1000 square feet of floor area shall be provided;~~

~~b. No more than seventy-five percent of parking shall be on-site surface parking. Such parking shall be placed in the interior of the lot, or at the rear of the building it serves; and~~

~~c. At least twenty-five percent of the required parking shall be enclosed in an on-site parking structure or located at an off-site common parking facility, provided that this requirement is waived when the applicant signs a no protest agreement to participate in any improvement district for the future construction of such facilities. (Ord. 13022 § 30, 1998: Ord. 12823 § 4, 1997: Ord. 10870 § 578, 1993).~~

21A.38.060 ~~Special district overlay - Office/research park development.~~

~~A. The purpose of the office/research park special district overlay is to establish an area for development to occur in a campus setting with integrated building designs, flexible grouping of commercial and industrial uses, generous landscaping and buffering treatment, and coordinated auto and pedestrian circulation plans. Office/research park districts shall only be established in areas designated within a community plan and zoned RB, O or I zones. Permitted uses shall include all uses permitted in the RB, O and I zones, as set forth in K.C.C. 21A.08, regardless of the classification used as the underlying zone on a particular parcel of land.~~

~~B. The following development standards shall apply to uses locating in office/research park overlay districts:~~

~~1. All uses shall be conducted inside an entirely enclosed building;~~

~~2. An internal circulation plan shall be developed to facilitate pedestrian and vehicular traffic flow between major project phases and individual developments;~~

~~3. The standards set forth in this section shall be applied to the development as a unified site, not withstanding any division of the development site under a binding site plan or subdivision;~~

~~4. All buildings shall maintain a 50-foot setback from perimeter streets and from residential zoned areas;~~

~~5. The total permitted impervious lot coverage shall be 80 percent. The remaining 20 percent shall be devoted to open space. Open space may include all required landscaping, and any unbuildable environmentally sensitive areas and their associated buffers;~~

~~6. The landscaping standards set forth in K.C.C. 21A.16 are modified as follows:~~

~~a. 20-foot wide Type II landscaping shall be provided along exterior streets, and 20-foot wide Type III landscaping shall be provided along interior streets;~~

~~b. 20-foot wide Type I landscaping shall be provided along property lines adjacent to residential zoned areas;~~

~~c. 15-foot wide Type II landscaping shall be provided along lines adjacent to nonresidential zoned areas; and~~

~~d. Type IV landscaping shall be provided within all surface parking lots as follows:~~

~~(1) Fifteen percent of the parking area, excluding required perimeter landscaping, shall be landscaped in parking lots with more than 30 parking stalls;~~

~~(2) At least one tree for every four parking stalls shall be provided, to be reasonably distributed throughout the parking lot; and~~

~~(3) No parking stall shall be more than 40 feet from some landscaping;~~

~~e. An inventory of existing site vegetation shall be conducted pursuant to the procedures set forth in K.C.C. 21A.16, and~~

~~f. An overall landscaping plan which conforms to the requirements of this subsection shall be submitted for the entire district or each major development phase prior to the issuance of any site development, grading, or building permits;~~

~~7. Lighting within an office/industrial park shall shield the light source from the direct view of surrounding residential areas;~~

~~8. Refuse collection/recycling areas and loading or delivery areas shall be located at least 100 feet from residential areas and screened with a solid view obscuring barrier;~~

~~9. Off street parking standards as set forth in Chapter 21A.18 are modified as follows:~~

~~a. one space for every 300 square feet of floor area shall be provided for all uses, except on-site daycare, exercise facilities, eating areas for employees, archive space for tenants, retail/service uses;~~

~~b. parking for on-site daycare, exercise facilities, eating areas for employees, archive space for tenants, and retail/service uses shall be no less than one space for every 1000 square feet of floor area and no greater than one space for every 500 square feet of floor area; and~~

~~c. at least 25 percent of required parking shall be located in a parking structure; and~~

~~10. Sign standards as set forth in Chapter 21A.20 are modified as follows:~~

~~a. Signs visible from the exterior of the park shall be limited to one monument office/research park identification sign at each entrance. Such signs shall not exceed an area of 64 square feet per sign;~~

~~b. no pole signs shall be permitted; and~~

~~c. all other signs shall be visible only from within the park. (Ord.11621 § 100, 1994: 10870 § 579, 1993).~~Not Used.

21A.38.070 ~~Special district overlay - Urban planned development (UPD) purpose and designation. A. The purpose of the UPD special district overlay is to provide a means for community, subarea or neighborhood plans to designate urban areas which are appropriate for development on a large scale basis:~~

~~B.In designating an overlay district, the comprehensive plan, subarea plan, neighborhood plan or area zoning shall delineate UPD overlay district boundaries.~~

~~C.The community plan, subarea plan, neighborhood plan; or area zoning shall designate and adopt urban residential zoning consistent with comprehensive plan policies.~~

~~D.In designating an overlay district, the community plan, subarea plan, neighborhood plan or area zoning may:~~

~~1. Set a maximum or range of the number of dwelling units within the UPD; and~~

~~2. Incorporate project description elements or requirements to the extent known, including but not limited to the following: conceptual site plan; mix of attached and detached housing; affordable housing goals and/or programs; major transportation or other major infrastructure programs and the UPD's participation therein; and any other provision or element deemed appropriate. (Ord. 12823 § 5, 1997: Ord. 10870 § 580, 1993).~~Not Used.

21A.38.080 ~~Special district overlay - UPD implementation. Implementation of the UPD designation shall comply with the following:~~

~~A.The minimum site size for an UPD permit application shall be not less than 200 acres. "Site size" for purposes of this subsection means contiguous land under one ownership or under the control of a single legal entity responsible for submitting an UPD permit application and for carrying out all provisions of the development agreement; and~~

~~B. The UPD shall comply with the standards and procedures set out in Chapter 21A.39. (Ord. 10870 § 581, 1993).~~ Not Used.

21A.38.090 ~~Special district overlay - Economic redevelopment. A. The purpose of the economic redevelopment special district overlay is to provide incentives for the redevelopment of large existing, underutilized concentrations of commercial/industrial lands within urban areas.~~ Not Used.

~~B. The economic redevelopment special district overlay shall only be designated through the area zoning process; located in areas designated within a community, subarea or neighborhood plan as an activity center; and zoned CB, RB, O, or I.~~

~~C. The standards of this title and other county codes shall be applicable to development within the economic redevelopment special district overlay except as follows:~~

~~1. Commercial or industrial uses that exist within an area as of the effective date of legislation applying the economic redevelopment special district overlay, but that are not otherwise permitted by the zoning, shall be considered permitted uses upon only the lots that they occupied as of that date.~~

~~2. The minimum parking requirements of this title shall be reduced as follows, provided that such reductions do not apply to new construction on vacant property or the vacant portions of partially-developed property where that construction is not an enlargement or replacement of an existing building:~~

~~a. The parking stall requirements are reduced 100 percent provided that:~~

~~(1) the square footage of any enlargement or replacement of an existing building does not in total exceed 125 percent of the square footage of the existing building;~~

~~(2) the building fronts on an existing roadway improved to urban standards or a roadway programmed to be improved to urban standards as a capital improvement project, that accommodates on-street parking; and~~

~~(3) there is no net decrease in existing off-street parking space.~~

~~b. the parking stall requirements are reduced 50 percent provided that:~~

~~(1) the square footage of any enlargement or replacement of an existing building in total exceeds 125 percent of the square footage of the existing building;~~

~~(2) the height of the enlarged or replacement building does not exceed the base height of the zone in which it is located;~~

~~(3) the building fronts on an existing roadway improved to urban standards or a roadway programmed to be improved as a capital improvement project, that accommodates on-street parking; and~~

~~(4) there is no net decrease in existing off-street parking spaces, unless it exceeds the minimum requirements of subsection C.2.b.~~

~~3. The landscaping requirements of this title shall be waived, provided that:~~

~~a. street trees, installed and maintained by the adjacent property owner, shall be substituted in lieu of landscaping; and~~

~~b. any portion of the overlay district that directly abuts properties outside of the district shall provide, along said portions, a landscape buffer area no less than 50 percent of that required by this title.~~

~~4. The setback requirements of this title shall be waived, provided that:~~

~~a. setback widths along any street forming a boundary of the overlay district shall comply with this title, and~~

~~b. any portion of the overlay district that directly abuts properties outside of the district shall provide, along said portions, a setback no less than 50 percent of that required by this title.~~

~~5. The building height limits of this title shall be waived, provided that the height limit within 50 feet of the perimeter of the overlay district shall be 30 feet.~~

~~6. Signage shall be limited to that allowed within the CB zone.~~

~~7. The roadway improvements of the King County code shall be waived, provided a no-protest agreement to participate in future road improvement districts (RID) is signed by an applicant and recorded with the county.~~

~~8. The pedestrian circulation requirements of this title shall be waived.~~

~~9. The impervious surface and lot coverage requirements of this title shall be waived.~~

~~10. On I zoned lands that are designated in the comprehensive plan as unincorporated activity centers, conditional use permits shall not be issued where the resulting impacts such as noise, smoke, odor and glare would be inconsistent with the maintenance of nearby viable commercial and residential areas.~~

~~D.For properties that have frontage on pedestrian street(s) or routes as designated in an applicable plan or area zoning process, the following conditions shall apply:~~

~~1. main building entrances shall be oriented to the pedestrian street;~~

~~2. at the ground floor (at grade), buildings shall be located no more than 5 feet from the sidewalk or sidewalk improvement, but in no instance shall encroach on the public right-of-way;~~

~~3. building facades shall comprise at least 75% of the total pedestrian street frontage for a property, and if applicable, at least 75% of the total pedestrian route frontage for a property;~~

~~4. minimum side setbacks of the underlying zoning are waived;~~

~~5. building facades of ground floor retail, general business service, and professional office land uses, that front onto a pedestrian street or route shall include windows and overhead protection;~~

~~6. building facades, along a pedestrian street or route, that are without ornamentation, or are comprised of uninterrupted glass curtain walls or mirrored glass are not permitted; and~~

~~7. vehicle access shall be limited to the rear access alley or rear access street where such an alley or street exists. (Ord. 12823 § 6, 1997: Ord. 11566 § 1, 1994: 11351 § 1, 1994).~~

21A.38.100 ~~Special district overlay - Commercial/industrial. A. The purpose of the commercial/industrial special district overlay is to accommodate and support existing commercial/industrial areas outside of activity centers by providing incentives for the redevelopment of underutilized commercial or industrial lands and by permitting a range of appropriate uses consistent with maintaining the quality of nearby residential areas.~~ Not Used.

~~B.The commercial/industrial special district overlay shall be designated only through the area zoning process and applied to areas substantially developed with a mix of commercial and light industrial uses and zoned CB, RB, O, or I.~~

~~C.The standards of this title and other county codes shall be applicable to development within the commercial/industrial special district overlay except as follows:~~

~~1. Legally-established commercial or industrial uses that exist within an area as of the effective date of legislation applying the commercial/industrial special district overlay, but that are not otherwise permitted by the zoning, shall be considered permitted uses upon only the lots that they occupied as of that date.~~

~~2. Permitted uses within the area of a commercial/industrial special district overlay shall include those uses permitted in the base zone applied therein as well as permitted uses as set forth in the I zone with the exception of the following:~~

~~a. any use permitted in the I zone requiring a conditional use permit;~~

~~b. auction houses;~~

~~c. livestock sales;~~

~~d. SIC Industry Group 201 (meat products);~~

~~e. SIC Industry Group 202 (dairy products);~~

~~f. SIC Industry Group 204 (grain mill products);~~

~~g. SIC Industry Group 207 (fats and oils);~~

~~h. motor vehicle and boat dealers;~~

~~i. SIC Major Group 24 (lumber and wood products, except furniture) except 2431 (millwork) and 2434 (wood kitchen cabinets);~~

~~j. SIC Industry Group 311 (leather tanning and finishing);~~

~~k. SIC Major Group 32 (stone, clay, glass and concrete products);~~

~~l. SIC Industry 3999 (manufacturing industries, not elsewhere classified) dressing of furs, fur stripping and pelts only;~~

~~m. SIC Industry 7534 (tire retreading);~~

~~n. SIC Major Group 02 (agricultural production--livestock and animal specialties);~~

~~o. SIC Industry 2951 (asphalt paving mixtures and blocks);~~

~~p. resource accessory uses, and~~

~~q. outdoor storage of equipment or materials occupying more than 25% of the site associated with: SIC Major Group 15 (building construction--contractors and operative builders), SIC Major Group 16 (heavy construction other than building construction--contractors), SIC Major Group 17 (construction--special trade contractors) and, SIC Industry 7312 (outdoor advertising services), provided, that such outdoor storage be visually screened from surrounding properties.~~

~~4. Uses permitted both by the base zone applied to the property and through the application of the commercial/industrial special district overlay shall be subject to the limitations on use found in the base zone in K.C.C. 21A.08 except for commercial/industrial accessory uses to which the limitations on use in the base zone shall not apply.~~

~~5. The minimum parking requirements of this title shall be reduced as follows, provided that such reductions do not apply to new construction on vacant property or the vacant portions of partially-developed property where that construction is not an enlargement or replacement of an existing building:~~

~~a. the parking stall requirements are reduced 100 percent provided that:~~

~~(1) the square footage of any enlargement or replacement of an existing building does not in total exceed 125 percent of the square footage of the existing building;~~

~~(2) the building fronts on an existing roadway improved to urban standards or a roadway programmed to be improved to urban standards as a capital improvement project, that accommodates on-street parking; and~~

~~(3) there is no net decrease in existing off-street parking space.~~

~~b. the parking stall requirements are reduced 50 percent provided that:~~

~~(1) the square footage of any enlargement or replacement of an existing building in total exceeds 125 percent of the square footage of the existing building;~~

~~(2) the height of the enlarged or replacement building does not exceed the base height of the zone in which it is located;~~

~~(3) the building fronts on an existing roadway improved to urban standards or a roadway programmed to be improved to urban standards as a capital improvement project, that accommodates on-street parking; and~~

~~(4) there is no net decrease in existing off-street parking spaces, unless it exceeds the minimum requirements of subsection C.5.b.~~

~~6. The landscaping requirements of this title shall be waived, provided that:~~

~~a. street trees, installed and maintained by the adjacent property owner, shall be substituted in lieu of landscaping; and~~

~~b. any portion of the overlay district that directly abuts properties outside of the district shall provide, along said portions, a landscape buffer area no less than 50 percent of that required by this title.~~

~~7. The setback requirements of this title shall be waived, provided that:~~

~~a. setback widths along any street forming a boundary of the overlay district shall comply with this title; and~~

~~b. any portion of the overlay district that directly abuts properties outside of the district shall provide, along said portions, a setback no less than 50 percent of that required by this title.~~

~~8. The building height limits of this title shall be waived, provided that the height limit within 50 feet of the perimeter of the overlay district shall be 30 feet.~~

~~9. Signage shall be limited to that allowed within the CB zone.~~

~~10. The roadway improvements of the King County code shall be waived, provided a no-protest agreement to participate in future road improvement districts (RID) is signed by an applicant and recorded with the county.~~

~~11. The pedestrian circulation requirements of this title shall be waived.~~

~~12. The impervious surface and lot coverage requirements of this title shall be waived.~~

~~D.The following standards shall be applicable to unincorporated activity centers as designated in the comprehensive plan and located within the commercial/industrial special district overlay:~~

~~1. For properties that have frontage on pedestrian street(s) or routes as designated in an applicable plan or area zoning process, except for gasoline service stations (SIC 5541) and grocery stores (SIC 5411) that also sell gasoline, the following conditions shall apply:~~

~~a. main building entrances shall be oriented to the pedestrian street;~~

~~b. at the ground floor (at grade), buildings shall be located no more than 5 feet from the sidewalk or sidewalk improvement, but in no instance shall encroach on the public right-of-way;~~

~~c. building facades shall comprise at least 75% of the total pedestrian street frontage for a property, and if applicable, at least 75% of the total pedestrian route frontage for a property;~~

~~d. minimum side setbacks of the underlying zoning are waived;~~

~~e. building facades of ground floor retail, general business service, and professional office land uses, that front onto a pedestrian street or route shall include windows and overhead protection;~~

~~f. building facades, along a pedestrian street or route, that are without ornamentation, or are comprised of uninterrupted glass curtain walls or mirrored glass are not permitted; and~~

~~g. vehicle access shall be limited to the rear access alley or rear access street where such an alley or street exists. (Ord. 12823 § 7, 1997: Ord. 11567 § 1, 1994).~~

~~21A.38.110 Special district overlay - Fully contained community (FCC) purpose, designation, and implementation. A. the purpose of the FCC special district overlay is to provide a means to designate a limited number of areas which are uniquely appropriate for conversion to urban development on a large scale basis.~~

~~B. In designating an overlay district, the Comprehensive Plan and area zoning shall:~~

~~1. Delineate FCC overlay district boundaries; and~~

~~2. Ensure that surrounding properties are classified with rural residential zoning consistent with community plan and comprehensive plan policies in order to restrict future urban development in the area solely to the FCC site.~~

~~C. In designating an overlay district, the Comprehensive Plan and area zoning may:~~

~~1. Set a maximum or range of the number of dwelling units within the FCC; and~~

~~2. Incorporate project description elements or requirements to the extent known, including but not limited to the following: conceptual site plan; mix of attached and detached housing; affordable housing goals and/or (programs; major transportation or other major infrastructure programs and FCC's participation therein; any other provision or element deemed appropriate.~~

~~D. Implementation of the FCC shall be accomplished by complying with the standards and procedures set forth in 21A.39. (Ord. 12171 § 7, 1996).~~

21A.38.120 Special district overlay - Wetland management areas. A. The purpose of the wetland management area special overlay district is to provide a means to designate certain unique and outstanding wetlands when necessary to protect their functions and values from the impacts created from geographic and hydrologic isolation and impervious surface.

B. The following development standards shall be applied in addition to all applicable requirements of ~~K.C.C.~~ ISDC chapter 21A.24 to development proposals located within a wetland management area district overlay:

1. All subdivisions and short subdivisions on residentially zoned properties that are identified in an adopted basin plan for impervious surface limitations, shall have a maximum impervious surface area of eight percent of the gross acreage of the plat. ~~For areas that are not covered by an adopted basin plan, this limit shall apply to all residentially zoned lands located within the wetland management area.~~ Distribution of the allowable impervious area among the platted lots shall be recorded on the face of the plat. Impervious surface of existing roads need not be counted towards the allowable impervious area. This condition may be modified by the ~~director~~ Director for the minimum necessary to accommodate unusual site access conditions;

2. All subdivisions and short subdivisions on properties identified in an adopted basin plan for clustering and setaside requirements shall be

required to cluster away from wetlands or the axis of corridors along stream tributaries and identified swales connecting wetlands in order to minimize land disturbance and maximize distance from these sensitive features. At least ~~sixty-five percent of affected portions of RA-zoned properties and at least~~ fifty percent of all ~~other~~ affected portions of the property shall be left in native vegetation, preferably forest, and placed in a permanent open space tract;~~.~~ ~~In the absence of a basin plan, these requirements shall apply to all lands containing or adjacent to a wetland, a stream tributary corridor or a swale connecting wetlands;~~ and

3. Clearing and grading activity from October 1 through March 31 shall meet the provisions of ~~K.C.C.~~ISDC 16.82.150D wherever not already applicable. ~~(Ord. 13307 § 1, 1998; Ord. 12823 § 14, 1997; Ord. 12809 § 5, 1997).~~

21A.38.130 ~~Special district overlay - Agricultural production buffer. A. The purpose of the agricultural production buffer special district overlay is to provide a buffer between agricultural and upslope residential land uses. An agricultural production buffer special district overlay shall only be established in areas adjacent to an agricultural production district and zoned RA.~~Not Used.

~~B. The following development standard shall apply to uses locating in an agricultural production buffer special district overlay:~~

~~1. Lots shall be clustered pursuant to K.C.C. 21A.14.040 and at least 75 percent of a site shall remain as open space, unless greater lot area is required by the Seattle-King County health department. (Ord. 12823 § 8, 1997).~~

~~21A.38.140 Special district overlay - Residential infill. A. The purpose of the residential infill special district overlay is to require the consolidation of individual parcels as a single development project when a subdivision application of one or more acres is made. A residential infill district overlay shall only be established in areas zoned R-8.~~

~~B. The following development standards shall apply to uses locating in a residential infill district overlay:~~

~~1. Recreation and open space shall be sited adjacent to any existing utility right-of-way corridor(s) or recreation and open space wherever feasible; and~~

~~2. Pedestrian access shall be provided to adjacent utility right-of-way corridor(s) as found necessary by department staff. (Ord. 12823 § 9, 1997).~~

~~21A.38.150 Special district overlay - Ground water protection. A. The purpose of the ground water protection special district overlay is to limit land uses that have the potential to severely contaminate groundwater supplies and to provide increased areas of permeable surface to allow for infiltration of surface water into ground resources.~~

~~B. For all commercial and industrial development proposals, at least 40 percent of the site shall remain in natural vegetation or planted with landscaping, which area shall be used to maintain predevelopment infiltration rates for the entire site. For purposes of this special district overlay, the following shall be considered commercial and industrial land uses:~~

~~1. amusement/entertainment land uses as defined by K.C.C. 21A.08.040 except golf facilities;~~

~~2. general services land uses as defined by K.C.C. 21A.08.050 except health and educational services, daycare 1, churches, synagogues, and temples;~~

~~3. government/business services land uses as defined by K.C.C. 21A.08.060 except government services;~~

~~4. retail/wholesale land uses as defined by K.C.C. 21A.08.070 except forest product sales and agricultural product sales;~~

~~5. manufacturing land uses as defined by K.C.C. 21A.08.080; and,~~

~~6. mineral extraction and processing land uses as defined by K.C.C. 21A.08.090.~~

~~C. Permitted uses within the area of the ground water protection special district overlay shall be those permitted in the underlying zone, excluding the following as defined by Standard Industrial Classification number and type:~~

~~1. SIC 4581, airports, flying fields, and airport terminal services;~~

~~2. SIC 4953, refuse systems, (including landfills and garbage transfer stations operated by a public agency);~~

~~3. SIC 4952, sewerage systems (including wastewater treatment facilities); and~~

~~4. SIC 7996, amusement parks; SIC 7948, racing, including track operation; or other commercial establishments or enterprises involving large assemblages of people or automobiles except where excluded by section B above;~~

~~5. SIC 0752, animal boarding and kennel services;~~

~~6. SIC 1721, building painting services;~~

~~7. SIC 3260, pottery and related products manufacturing;~~

~~8. SIC 3599, machine shop services;~~

~~9. SIC 3732, boat building and repairing;~~

~~10. SIC 3993, electric and neon sign manufacturing;~~

~~11. SIC 4226, automobile storage services;~~

~~12. SIC 7334, blueprinting and photocopying services;~~

~~13. SIC 7534, tire retreading and repair services;~~

~~14. SIC 7542, car washes;~~

~~15. SIC 8731, commercial, physical and biological research laboratory services;~~

~~16. SIC 02, interim agricultural crop production and livestock quarters or grazing on properties 5 acres or larger in size;~~

~~17. SIC 0752, public agency animal control facility;~~

~~18. SIC 2230, 2260, textile dyeing;~~

~~19. SIC 2269, 2299, textile and textile goods finishing;~~

~~20. SIC 2700, printing and publishing industries;~~

~~21. SIC 2834, pharmaceuticals manufacturing;~~

~~22. SIC 2844, cosmetics, perfumes and toiletries manufacturing;~~

~~23. SIC 2893, printing ink manufacturing;~~

~~24. SIC 3000, rubber products fabrication;~~

~~25. SIC 3111, leather tanning and finishing;~~

~~26. SIC 3400, metal products manufacturing and fabrication;~~

~~27. SIC 3471, metal electroplating;~~

~~28. SIC 3691, 3692, battery rebuilding and manufacturing;~~

~~29. SIC 3711, automobile manufacturing; and~~

~~30. SIC 4600, petroleum pipeline operations. (Ord. 12823 § 10, 1997).~~

~~21A.38.160 Special district overlay - Aviation facilities. A. The purpose of the aviation facilities special district overlay is to protect existing non-commercial airports from encroaching residential development. An aviation facilities special district overlay shall only be established in the area up to 1/4 mile around airports and shall be zoned UR or RA.~~

~~B. The following development standards shall apply to uses locating in aviation facilities special overlay districts:~~

~~On the title of all properties within pending short subdivisions or~~

~~subdivisions and binding site plans, the following statement shall be recorded and be shown to all prospective buyers of lots or homes:~~

~~"This property is located near the (name of airport) which is recognized as a legitimate land use by King County. Air traffic in this area, whether at current or increased levels, is consistent with King County land use policies provided it conforms to all applicable state and federal laws." (Ord. 12823 § 11, 1997).~~

~~21A.38.170 Special district overlay - Urban aquifer protection area.~~

~~A.The purpose of the urban aquifer protection area special district overlay is to provide additional protection for urban areas that are highly susceptible to ground water contamination. An urban aquifer protection area special district overlay shall only be established within areas designated in the comprehensive plan as highly susceptible to ground water contamination, including the surrounding area up to 1/2 mile, and zoned UR, R, NB, CB, O, and I.~~

~~B.Permitted uses shall be those permitted in the underlying zone, excluding the following as defined by Standard Industrial Classification (SIC) number and type:~~

~~1. SIC 4953, refuse systems (including hazardous waste recycling or treatment and solid waste landfills);~~

~~2. SIC 461, pipelines, except natural gas (including petroleum pipelines); and~~

~~3. businesses maintaining open storage of toxic substances.~~

~~C.New septic tank drainfield systems shall be prohibited. (Ord. 12823 § 12, 1997).~~

~~21A.38.180 Special district overlay - Highway-oriented development.~~

~~A.The purpose of the highway-oriented development special district overlay is to ensure the compatibility of highway-oriented land uses adjacent to rural residential and resource land uses. A highway-oriented special district overlay shall only be established along existing or former state or U.S. highway route corridors and zoned RA, UR, NB, RB or I.~~

~~B. Except in the RB zone at highway interchanges, permitted uses in the RA, UR, NB, RB or I zones shall be those in the underlying zone, excluding the following as defined by Standard Industrial Classification (SIC) number and type:~~

~~1. SIC 5812, eating places; and~~

~~2. SIC 5813, drinking places.~~

~~C.Permitted uses in the RB zone at highway interchanges shall be limited to the following highway oriented commercial services for the traveling public, as defined by Standard Industrial Classification (SIC) number and type:~~

~~1. SIC 5411, grocery stores (including convenience stores);~~

~~2. SIC 5541, gasoline service stations;~~

~~3. SIC 5812, eating places; and~~

~~4. SIC 7011, hotels and motels.~~

~~D.The following development standards shall apply to uses located in highway-oriented overlay districts:~~

~~1. Business signs are limited to those allowed in the NB zone classification. Ground supported signs shall not exceed five feet in height.~~

~~2. Natural vegetation shall be retained wherever possible, and landscaping shall be used for screening. The following commercial screening matrix shall be applied where NB, RB and I zoned properties, and properties with potential NB, RB or I zoning, have common boundaries with rural or resource zoned lands. The purpose of this is to allow for adequate buffering between commercial or industrial and rural land uses.~~

~~Commercial Screening Matrix~~

~~Adjacent Property Zoning~~	~~Commercial Property Zoning~~		
	~~NB Neighborhood Business~~	~~RB Regional Business~~	~~I Industrial~~
~~RA (Rural Area)~~	~~Type I Buffer 30' Depth~~	~~Type I Buffer 30' Depth~~	~~Type I Buffer 50' Depth~~
~~F (Forest) A (Agricultural)~~	~~Type I Buffer 30' Depth~~	~~Type I Buffer 50' Depth~~	~~Type I Buffer 50' Depth~~

~~3. Primary vehicular access shall be from a principal arterial road. Secondary vehicular access shall be from a collector arterial road.~~

~~4. At the time of site plan review, the county may require additional right-of-way dedication to provide new roadways.~~

~~5. Utilities in RB zones shall be placed underground.~~

~~6. All uses shall be evaluated for impacts to ground water quality. (Ord. 12823 § 13, 1997).~~

21A.38.200 Special district overlay - Erosion hazards near sensitive water bodies.
A. The purpose of the erosion hazards near sensitive water bodies special overlay district is to provide a means to designate sloped areas posing erosion hazards which drain directly to lakes or streams of high resource value which are particularly sensitive to the impacts of increased erosion and the resulting sediment loads from development.

B. The following development standards shall be applied in addition to all applicable requirements of ~~K.C.C.~~ISDC 21A.24 to development proposals located within erosion hazards near a sensitive water bodies district overlay:

1. A no-disturbance area shall be established on the sloped portion of the special district overlay to prevent damage from erosion. Land clearing or development shall not occur in the no-disturbance area, except for the clearing activities listed in subsection a. Clearing activities listed in subsection a shall only be permitted if they meet the requirements of subsection b.

a. Clearing activities may be permitted as follows:

i. for the construction of single family residences on pre-existing separate lots;

ii. for the construction of utility corridors to service existing development along existing rights-of-way including any vacated portions of otherwise contiguous rights-of-way;

iii. for the construction of roads providing sole access to buildable property and associated utility facilities within those roadways; or

iv. for the construction of development within an isolated no-disturbance area of two acres or less in size. The isolated no-disturbance area is either geologically separated from other no-disturbance areas or lies completely within a separate drainage subbasin and is, therefore, hydrologically isolated from the rest of the no-disturbance area.

b. The clearing activities listed in subsection a. may be permitted only if the following requirements are met:

i. a report which meets the requirements of ~~K.C.C.~~ISDC 21A.24.120 shall show that the clearing activities will not subject the area to risk of landslide or erosion and that the purpose of the no-disturbance area is not compromised in any way;

ii. the clearing activities shall be mitigated, monitored and bonded consistent with the mitigation requirements applicable to sensitive areas regulated in ~~K.C.C.~~ISDC 21A.24;

iii. the clearing activities are limited to the minimal area and duration necessary for construction; and

iv. the clearing activities are consistent with ~~K.C.C.~~ ISDC 21A.24.

The upslope boundary of the no-disturbance area lies at the first obvious break in slope from the upland plateau over onto the steep valley walls. The downslope boundary of this zone includes those areas designated as erosion or landslide hazard areas pursuant to ~~K.C.C.~~ISDC 21A.24.220 and 21A.24.280. The sensitive areas folio indicates the general location of these hazard areas, but it cannot be used to specify the areas' precise boundaries. Maps of the approximate boundaries of these no-disturbance zones shall be available at the department. Single family or multi-family residential density from the no-disturbance area may be reallocated onto any buildable portion of the site pursuant to ~~K.C.C.~~ISDC 21A.12.080, or transferred to other sites pursuant to ~~K.C.C.~~ISDC 21A.36;

3. New development proposals for sites which drained predeveloped runoff to the no-disturbance zone shall evaluate the suitability of onsite soils for infiltration. All runoff from newly constructed impervious surfaces shall be retained on-site unless this requirement precludes the ability to meet minimum density requirements in ~~K.C.C.~~ ISDC 21A.12. When minimum density cannot be met, runoff shall be retained on-site as follows:

a. Infiltration of all site runoff shall be required in granular soils as defined in the King County Surface Water Design Manual (KCSWDM).

b. Infiltration of downspouts shall be required in granular soils and in soil conditions defined as allowable in the ~~Surface Water Design Manual~~KDSWM when feasible to fit the required trench lengths onsite;

c. When infiltration of downspouts is not feasible, downspout dispersion trenches shall be required when minimum flow paths defined in the ~~Surface Water Design Manual~~ KDSWM can be met onsite or into adjacent open space; and

d. When dispersion of downspouts is not feasible, downspouts shall be connected to the drainage system via perforated pipe.

4. For the portions of proposed subdivisions, short subdivisions and binding site plans that cannot infiltrate runoff up to the 100-year peak flow, at least 25 percent shall remain undisturbed and set aside in an open space tract consistent with ~~K.C.C.~~ISDC 21A.24.150-180; and

5. For the portions of all development proposals that cannot infiltrate runoff up to the 100-year peak flow, no more than 35 percent of the gross site area shall be covered by impervious surfaces. For new subdivisions and short subdivisions, maximum lot coverage should be specified for subsequent residential building permits on individual lots.

6. If the application of this section would deny all reasonable use of property, the applicant may apply for a reasonable use exception pursuant to ~~K.C.C.~~ISDC 21A.24.070B.

7. The director may modify the property specific development standards required by B.1 through B.5 of this section, when a development proposal complies with the following:

a. The proposed development is subject to public/private partnerships such as an approved community block grant or other such water quality program designed to improve water quality in the basin,

b. The proposed development is designated by ~~King County~~the City, in consultation with the Lake Sammamish Management Committee, as a demonstration project designed to implement best management practices and state of the art technology that assures the greatest possible improvement to water quality, and

c. A site specific study is conducted by the applicant and approved by the director, which demonstrates that the proposed development substantially increases water quality by showing the following:

(1) water quality on-site is improved;

(2) the development project will not subject downstream channels to increased risk of landslide or erosion;

(3) the development project will not subject the nearest sensitive water body to additional erosion hazards; and

(4) the project is consistent with element a. and b. above, and provides predictable improvements to the water quality of Lake Sammamish. ~~(Ord. 12823 § 15, 1997).~~

21A.38.210 ~~Special district overlay - Heron habitat protection area. A. The purpose of the heron habitat protection area special district overlay is to provide a means to designate areas that provide essential feeding, nesting and roosting habitat for identified great blue heron rookeries. A district overlay will usually contain several isolated areas of known heron habitat in the general region surrounding the heron rookery.~~ Not Used.

~~B. The following development standards shall be applied in addition to all applicable requirements of K.C.C. 21A.24 and Title 25 to development proposals located within a heron habitat protection area district overlay:~~

~~1. The following conditions shall apply to the wetland or along the main channel of the stream riparian zone containing the heron rookery (tributary streams are excluded):~~

~~21A-985-7h(King County 9-97)~~

~~21A.38.210 GENERAL PROVISIONS - URBAN PLANNED DEVELOPMENTS~~

~~a. The 100-year floodplain shall be left undisturbed. Development proposals on individual lots shall require the 100-year floodplain to retain the native vegetation and be placed in a county-approved conservation easement or notice shall be placed on the title of the lot. The notice shall be approved by King County and filed with the records and elections division. The notice shall inform the public of the presence and location of the floodplain and heron habitat on the property and that limitations on actions in or affecting the area exist. Subdivisions, short subdivisions and binding site plans shall require the 100-year floodplain to retain the native vegetation and be placed in a sensitive areas tract, to be dedicated to the homeowner's association or other legal entity which assumes maintenance and protection of the tract. Determination of the floodplain shall be done for each permit application based on actual field survey using county-approved floodplain elevations;~~

~~b. There shall be a 660 foot radius buffer maintained around the periphery of the great blue heron rookery. If the sensitive areas and buffers are not adequate to provide the radius, then the buffer shall be expanded to meet the requirement. A rookery and its buffer shall be designated as sensitive area tract, easement or noticed on title as required in this subsection; and~~

~~c. All access shall be restricted under nest trees from February 15th to July 31st and noted on signage at the floodplain or buffer edge, whichever is further from the rookery. Access may be further restricted with fencing or dense plantings with native plant material approved by the county. All developments in R-12 or higher density zones shall restrict access and provide an interpretive sign that provides information about the stream or wetland and its wildlife, biological, and hydrological functions. All signs shall be consistent with sensitive area signage requirements and subject to review and approval of the county;~~

~~2. Subdivisions, short subdivisions, binding site plans, site development permits or other commercial or multifamily permits adjacent to stream reaches and wetlands designated on the heron habitat protection area district overlay map, shall provide buffers that are 50 feet greater than required pursuant to K.C.C. 21A.24 along those streams and wetlands to provide habitat for herons. This additional 50 foot buffer shall be planted with dense native plant material to discourage human intrusion into feeding or nesting and roosting areas. Plantings shall be reviewed and approved by the department. If conformance with the additional buffer requirement results in an unbuildable lot, then the minimum variation necessary to accommodate the proposed development shall be determined in consultation with county biologists and be reviewed and approved by the department;~~

~~3. Along the shoreline of lakes and river corridors included in the heron habitat protection area, all subdivisions, short subdivisions, binding site plans, site development permits or other commercial or multifamily permits shall provide a 50 foot buffer in addition to required shoreline setbacks of K.C.C. Title 25 and 21A.24. Along the shoreline of the major rivers (Sammamish, Green, Cedar, Snoqualmie, Snohomish, Skykomish and White River), the setback requirement may be waived if a special wildlife study shows no great blue heron nesting, roosting, and feeding areas on the site. These studies shall be done by a wildlife biologist and approved by county biologists. This additional 50 foot buffer shall be planted with dense native plant material to discourage human intrusion into feeding or nesting and roosting areas. Plantings shall be reviewed and approved by the department; and~~

~~4. New docks, piers, bulkheads, and boat ramps constructed within the heron habitat protection area shall mitigate for loss of heron feeding habitat by providing enhanced native vegetation approved by the county adjacent to the development or between the development and the shoreline. Bulkheads shall be buffered from the water's edge by enhanced plantings of native vegetation approved by the county. (Ord. 12823 § 16, 1997).~~

21A.38.220 ~~Special district overlay - Urban stream protection area. A. The purpose of the urban stream protection area special district overlay is to provide a means to designate areas with substantial fisheries resources that have severe flooding and stream damage problems from high storm water volumes. This district overlay limits land coverage along significant urban stream corridors to reduce stormwater volumes and the costs associated with flooding problems and loss of salmon resources.~~Not Used.

~~B.The following development standards shall be applied to development proposals on R-1 zoned parcels located within an urban stream protection area district overlay:~~

~~1. Clearing is limited to and development shall be clustered on 30 percent of the site. Parcels adjacent to streams or wetlands shall place structures as far as feasible from streams and wetlands. For binding site plans, subdivisions and short subdivisions, the remaining 70 percent of the site shall be placed in a contiguous permanent open-space tract retaining the native vegetation. For individual lots, the remaining 70 percent of the parcel shall retain the native vegetation and be placed in a county-approved conservation easement, or notice shall be placed on the title of the lot. The notice shall be approved by King County and filed with the records and elections division. The notice shall inform the public of the presence and location of an urban stream protection area on the property and that limitations on actions in or affecting the corridor exist;~~

~~2. Where existing clearing has already exceeded 30 percent of the gross acreage of the site, reforestation according to a county-approved plan shall be provided to restore native forested cover to 70 percent of the site;~~

~~3. The maximum impervious surface area shall be 8 percent of the gross acreage of the site. Proposed short subdivisions, subdivisions, and binding site plans shall record the distribution of allowable impervious area among individual parcels on the face of the plat. Impervious surface of roads shall not be counted towards the allowable impervious area. This condition may be modified by the director only as necessary to accommodate unusual site access conditions;~~

~~4. Keeping or grazing of livestock shall be prohibited; and~~

~~5. No road crossings of streams defined in K.C.C. 21A.06.1240 shall be allowed. Crossing of streams by utilities shall be limited to existing road or utility rights-of-way unless no feasible alternative exists. (Ord. 12823 § 17, 1997).~~

21A.38.230 ~~Special district overlay - Significant Trees. A. The purpose of the significant trees special district overlay is to provide a means to designate areas losing their natural vegetation that characterizes their community and receiving the accompanying impacts from increased stormwater runoff and decreased wildlife habitat. This district overlay limits removal of significant trees in these urbanizing areas to reduce visual impacts of development and maintain a portion of the natural vegetation and soils characteristic of the Pacific Northwest.~~Not Used.

~~21A.38.230 GENERAL PROVISIONS - URBAN PLANNED DEVELOPMENTS~~

~~B. The following development standards shall be applied to all residential, commercial (including golf courses), industrial or institutional development proposals located within a significant tree district overlay:~~

~~1. Significant tree retention rates. Except when replacement trees are used as provided in subsection B.5, significant trees defined pursuant to K.C.C. 21A.06 shall be at a minimum retained as follows:~~

~~a. Exclusive of the area required for site access by vehicles, pedestrians, or utility infrastructure, significant trees shall be retained within required perimeter landscape areas at the following rates:~~

~~(1) One hundred percent for the interior perimeters.~~

~~(2) Seventy-five percent for the street perimeter, provided that this standard may be reduced to 50 percent for retail commercial developments if:~~

~~(a) the combined landscaping and tree retention requirement is shown by the applicant to result in:~~

~~i. the loss of the line-of-sight necessary for identification of the retail commercial development; and~~

~~ii. a vegetative buffer exceeding the screening characteristics of a Type III landscape screen; or~~

~~(b) The average width of the street perimeter landscape area is increased by 50 percent, provided that within the additional landscape area, significant trees are retained at the rate consistent with subsection c;~~

~~b. If any portion of the lot contains erosion hazards, significant trees located in the interior of separate lots, including sensitive areas or their buffers, shall be retained in single detached dwelling development at the rate of 20 trees per acre or ten percent of such trees, whichever is greater;~~

~~c. Significant trees located in the interior of the development proposal, including sensitive areas or their buffers, shall be retained in a residential subdivision at the rate of 20 trees per acre or ten percent of such trees, whichever is greater;~~

~~d. Significant trees located in the interior of the development proposal, excluding sensitive areas or their buffers, shall be retained in an apartment or townhouse development at the rate of 20 trees per acre or ten percent of such trees, whichever is greater;~~

~~e. Significant trees located in the interior of the development proposal, excluding sensitive areas or their buffers, shall be retained in commercial or industrial development at a rate of ten trees per acre or five percent of such trees, whichever is greater;~~

~~f. Significant trees located in the interior of the development proposal, excluding sensitive areas or their buffers and areas designated for sport fields, playfields or other recreational facilities, shall be retained in institutional developments at a rate of ten trees per acre or five percent of such trees, whichever is greater;~~

~~g. Utility developments and mineral extraction operations shall be exempt from the significant tree retention requirements of this section; and~~

~~h. Project sites with 25 percent or greater of the total gross site area in sensitive areas, sensitive area buffers and other areas to be left undisturbed such as wildlife corridors, shall be exempt from the significant tree retention requirements of this chapter;~~

~~2. Retention plan. The applicant shall submit tree retention plans as follows:~~

a. A significant tree inventory shall be submitted for review prior to or with submittal of development permit applications. The tree inventory may be conducted by any method that reflects general locations, numbers and grouping of significant trees on-site; and

b. A detailed tree retention plan shall be submitted for review prior to or with submittal of grading permit applications or other permit applications incorporating grading plans. This plan shall identify the exact location, size, species, and condition of the significant trees proposed to be retained, transplanted or replaced in order to comply with this chapter;

3. The retention requirements shall be met as follows:

a. Except as provided in subsection b, the applicant shall determine that the final tree retention plan does not include significant trees unable to survive more than ten years after the date of project completion due to:

(1) Damage or disease;

(2) Safety hazards due to potential root, trunk or primary limb failure;

(3) Windfall; or

(4) Age in relation to the normal lifespan of the tree species;

b. At the discretion of the county, damaged or diseased or standing dead trees, not classified as a danger tree, may be counted toward the significant tree requirement if demonstrated that such trees will provide important wildlife habitat;

c. A significant tree may be credited as two trees when it meets one or more of the following characteristics:

(1) The tree is 18 inches or greater in diameter;

(2) The tree is located in a grouping of at least five trees with canopies that touch or overlap;

(3) The tree provides energy savings through winter wind protection or summer shading as a result of its location relative to buildings;

(4) The tree belongs to a unique or unusual species;

(5) The tree is located within 25 feet of any sensitive area or required sensitive area buffers; or

(6) The tree is listed on a historical register; and

d. The department shall, pursuant to K.C.C. 2.98, develop and maintain an advisory listing of trees recommended for retention. Such list shall describe their general characteristics and suitability, and provide guidelines for their retention;

4. Protection. To provide the best protection for significant trees designated for retention, the development shall comply with the following:

a. No tree removal for a project action shall be allowed prior to the county approval of a grading permit consistent with tree retention and landscape plans;

b. Prior to clearing for a project action, trees to be retained shall be flagged;

c. Prior to grading for a project action and throughout construction, a temporary chainlink or plastic net fence shall be used to identify the protected area of any significant tree designated for retention. The height of such fencing shall be adjusted according to the topographic and vegetative conditions of the site to provide clear visual delineation of the protected area. The size of protected area around the tree shall be equal to one foot diameter for each inch of tree trunk diameter measured four feet above the ground; and

~~d. At no time during and after construction shall the following be permitted within the area described in subsection c:~~

~~(1) Impervious surfaces, fill, excavation, or storage of construction materials; or~~

~~(2) Grade level changes, except in limited circumstances where proposed improvements using permeable materials are determined by an arborist to be non-detrimental to the trees root system; and~~

~~e. Alternative or additional protection methods may be proposed and be used if determined by the director to provide equal or greater protection for trees designated for retention;~~

~~5. Plan modifications and tree replacement are permitted as follows:~~

~~a. Any significant tree in the interior may be replaced by another significant tree in the interior;~~

~~b. If the required number of significant trees cannot be retained, then non-significant sized trees may be retained or new trees may be planted to meet significant tree requirements as follows, provided that the reason for the purpose of this subsection, the significant tree to be replaced by the new or existing replacement tree is assigned a diameter of 12 inches:~~

~~(1) When using replacement trees measuring three inches in diameter or greater (as measured by caliper), one-half inch diameter of replacement tree shall be provided for every one inch diameter of significant tree to be replaced; and~~

~~(2) When using replacement trees measuring less than three inches in diameter (as measured by caliper), one inch diameter of replacement tree shall be provided for every one inch diameter of significant tree to be replaced; and~~

~~c. An approved tree retention plan shall be modified to reflect any changes made pursuant to subsection a and b: and~~

~~6. Maintenance. The following provisions apply to significant trees where applicable:~~

~~a. All significant trees shall be maintained for the life of the project;~~

~~b. All significant trees shall be pruned and trimmed as necessary to maintain a healthy growing condition or to prevent primary limb failure. This requirement shall not be interpreted to allow:~~

~~(1) Topping of primary stems;~~

~~(2) Pruning that results in the loss of 20 percent of vegetative mass, and~~

~~(3) Cutting of major roots, except in preparation for transplantation or as deemed necessary and/or acceptable by a certified arborist; and~~

~~c. With the exception of dead, diseased or damaged trees specifically retained to provide wildlife habitat; other dead, diseased, damaged or stolen plantings shall be replaced within three months or during the next planting season if the loss does not occur in a planting season.~~

~~C.The development standards set forth in paragraph B shall not be applied to institutional development proposals that consist of one or more of the following uses:~~

~~1. Government services listed in K.C.C. 21A.08.060,~~

~~2. Educational services listed in K.C.C. 21A.08.050,~~

~~3. Parks as listed in K.C.C. 21A.08.040 when located adjacent to an existing or proposed school, or~~

~~4. Libraries listed in K.C.C. 21A.08.040. (Ord. 12823 § 18, 1997).~~

21A.38.240 ~~Special district overlay - Floodplain Density. A. The purpose of the floodplain density special district overlay is to provide a means to designate areas that cannot accommodate additional density due to severe flooding problems. This district overlay limits development in sensitive areas to reduce potential future flooding.~~

~~B. The following development standards shall be applied to all development proposals on RA-5 zoned parcels located within a floodplain density special district overlay:~~ Not Used.

~~1. Density is limited to one home per 10 acres for any property that is located within a sensitive area; and~~

~~2. All development shall be clustered outside of the identified sensitive areas, unless the entire parcel is a mapped sensitive area. (Ord. 12823 § 19, 1997).~~

Chapter 21A.42
REVIEW PROCEDURES/NOTICE REQUIREMENTS

Sections:

21A.42.010 Code compliance review - Actions subject to review.
21A.42.020 Code compliance review - Notice requirements and comment period.
21A.42.030 Code compliance review - Decisions and appeals.
21A.42.040 Director review - Actions subject to review.
21A.42.080 Director review - Decision regarding proposal.
21A.42.090 Director review - Decision final unless appealed.
21A.42.100 Examiner review - Zone reclassification, urban plan developments and special use permits.
21A.42.110 Combined review.
21A.42.120 Establishment of hearing rules.
21A.42.130 Records.
21A.42.140 ~~Review process for high schools.~~Not Used.
21A.42.150 Modifications and expansions of uses or developments authorized by existing land use permits - Permits defined.
21A.42.160 Modifications or expansions of uses or developments authorized by existing land use permits - When use now permitted outright.
21A.42.170 Modifications or expansions of uses authorized by existing land use permits - Required findings.
21A.42.180 Modifications or expansions of uses authorized by existing land use permits - Required findings.
21A.42.190 Modifications and expansions - Uses or development authorized by existing conditional use, special use, or unclassified use permits.

21A.42.010 Code compliance review - Actions subject to review. The following actions shall be subject to administrative review for determining compliance with the provisions of this title and/or any applicable development conditions which may affect the proposal:

A.Building permits;

B.Grading permits; and

C.Temporary use permits. ~~(Ord. 10870 § 609, 1993).~~

21A.42.020 Code compliance review - Notice requirements and comment period.

A. The D~~d~~epartment shall provide posted, and published notice pursuant to ~~K.C.C.~~ISDC 21A.40 for temporary use permits. ~~In addition, mailed notice pursuant to K.C.C. 21A.40 shall be provided for temporary use permits in resource zones.~~

B.Any written comments on applications subject to code compliance review shall be submitted within 15 days of the date of published notice or the posting date, whichever is later. ~~(Ord. 10870 § 610, 1993).~~

21A.42.030 Code compliance review - Decisions and appeals. A. The D~~d~~epartment shall approve, approve with conditions, or deny permits based on compliance with this title and any other development condition affecting the proposal.

B.Decisions on temporary use permits may be appealed to the ~~zoning and subdivision~~ Hearing~~examiner~~Examiner.

C.Permits approved through code compliance review shall be effective for the time periods and subject to the terms set out as follows:

1. Building permits shall comply with ~~K.C.C. 16.04~~the Uniform Building Codes as adopted by the City in Title 16;

2. Grading permits shall comply with ~~K.C.C.~~ISDC 16.82; and

3. Temporary use permits shall comply with ~~K.C.C.~~ISDC 21A.32. ~~(Ord. 10870 § 611, 1993).~~

21A.42.040 Director review - Actions subject to review. ~~The following actions~~ Applications for variances, exceptions under 21A.24.070A and conditional uses shall be subject to the Ddirector review procedures set forth in this chapter~~:~~

A. ~~Applications for variances, exceptions under 21A.24.070A and conditional uses; and~~ Not Used

B. ~~Periodic review of extractive operations. (Ord. 12196 § 55, 1996: Ord. 11621 § 105, 1994: 10870 § 612, 1993).~~ Not Used.

21A.42.080 Director review - Decision regarding proposal. A. Decisions regarding the approval or denial of proposals ~~(excluding periodic review of extractive operations)~~ subject to Ddirector review shall be based upon compliance with the required showings of ~~K.C.C.~~ISDC 21A.44. ~~Periodic reviews of extractive operations shall be based upon the criteria outlined in K.C.C. 21A.22.050B.~~

B. The written decision contained in the record shall show:

1. Facts, findings and conclusions supporting the decision and demonstrating compliance with the applicable decision criteria; and

2. Any conditions and limitations imposed, if the request is granted.

C. The Ddirector shall mail a copy of the written decision to the applicant and to all parties of record.

D. Rules. The Ddirector shall adopt rules for the transaction of business and shall keep a public record of his actions, finding, waivers and determinations. ~~(Ord. 12196 § 56, 1996: Ord. 10870 § 616, 1993).~~

21A.42.090 Director review - Decision final unless appealed. A. The decision of the Ddirector shall be final unless the applicant or an aggrieved party files an appeal to the Hhearing Eexaminer pursuant to ~~K.C.C.~~ ISDC 20.24.

B. The Hearing Eexaminer shall review and make decisions based upon information contained in the written appeal and the record.

C. The Hearing Eexaminer's decision may affirm, modify, or reverse the decision of the Ddirector.

D. As provided by ~~K.C.C.~~ ISDC 20.24.210A and C:

1. The Hearing Eexaminer shall render a decision within ten days of the closing of hearing; and

2. The decision shall be final unless appealed under the provisions of ~~K.C.C.~~ ISDC 20.24.240B.

E. Establishment of any use or activity authorized pursuant to a conditional use permit or variance shall occur within four years of the effective date of the decision for such permit or variance, provided that for schools this period shall be five years. This period may be extended for one additional year by the Ddirector if the applicant has submitted the applications necessary to establish the use or activity and has provided written justification for the extension.

F. For the purpose of this section, "establishment" shall occur upon the issuance of all local permit(s) for on-site improvements needed to begin the authorized use or activity, provided that the conditions or improvements required by such permits are completed within the timeframes of said permits.

G. Once a use, activity or improvement allowed by a conditional use permit or variance has been established, it may continue as long as all conditions of permit issuance are met. ~~(Ord. 12196 § 57, 1996: Ord. 11940 § 1, 1995: Ord. 10870 § 617, 1993).~~

21A.42.100 Examiner review - Zone reclassifications, urban plan developments, and special use permits. Applications for zone reclassifications, special use permits and urban plan developments shall be reviewed by the Ddepartment subject to the procedures and criteria set forth in ~~K.C.C.~~ISDC 20.24 for action subject to approval by the City Ccouncil., ~~and notice shall~~

~~be provided pursuant to K.C.C. 21A.40.080 through .130. (Ord. 11621 § 106, 1994: Ord. 10870 § 618, 1993).~~

21A.42.110 Combined review. Proposed actions may be combined for review purposes with any other action subject to the same review process, provided:

A. Notice requirements for combined review shall not be less than the greatest individual action requirement; and

B. No permit shall be approved without prior review and approval of any required variance. ~~(Ord. 10870 § 619, 1993).~~

21A.42.120 Establishment of hearing rules. The D~~d~~epartment shall establish rules governing the conduct of public hearings before the ~~adjustor~~ Hearing Examiner and City Council pursuant to ~~K.C.C.~~ ISDC 2.98. ~~(Ord. 10870 § 620, 1993).~~

21A.42.130 Records. The D~~d~~epartment shall maintain public records for all permit approvals and denials containing the following information:

A. Application documents;
B. Tape recorded verbatim records of required public hearing;
C. Written recommendations and decisions for proposed actions;
D. Ordinances showing final council actions;
E. Evidence of notice;
F. Written comments received; and
G. Material submitted as exhibits. ~~(Ord. 10870 § 621, 1993).~~

21A.42.140 ~~Review process for high schools.~~ Not Used. ~~A. The School District shall hold a public hearing on the request for a building permit on the proposed high school and may merge the public hearing for environmental review with this hearing. The hearing shall address the proposal's compliance with the applicable development standards and whether the impacts of traffic on the neighborhood have been addressed pursuant to the State Environmental Policy Act, Chapter 43.21C RCW, and/or through the payment of road impact fees. The hearing may be conducted by the Board of Directors, or where authorized by board policy, by a hearing examiner appointed by the School Board. The District shall provide notice of the hearing as follows:~~

~~1. By posting the property;~~

~~2. By publishing in a newspaper of general circulation in the general area where the proposed high school is located;~~

~~3. By sending notices by first class mail to owners of property in an area within 500 feet of the proposed high school, provided such area shall be expanded as necessary to send mailed notices to at least 20 different property owners; and~~

~~4. By sending notices to other residents of the District that have requested notice.~~

~~B. At a regularly scheduled or special Board meeting, the Board of Directors shall adopt findings of compliance with applicable King County development standards or adopt proposed actions necessary to reach compliance. Where a hearing examiner has been appointed, the Board of Directors shall review and adopt or reject the hearing examiner's proposed findings and/or proposed actions. The board may include in the record any information supporting its findings or any information from prior public meetings held on the same general subject at the discretion of the Board.~~

~~C. Copies of the findings and/or the proposed actions shall be mailed to all parties of record and to the county.~~

~~D. Any aggrieved party of record may request the Board of Directors to reconsider the findings within 20 calendar days of its adoption. An aggrieved party requesting reconsideration shall submit written evidence challenging the findings or otherwise specifically identify reasons~~

~~why the District has failed to reasonably comply with the applicable King County development standards. Within 30 calendar days after a request for reconsideration has been filed with the District, the Board of Directors may reconsider and revise the findings and/or proposed actions, or may decline to reconsider. Failure to act, or to initiate the process for reconsideration by notifying the aggrieved party of record of intent to reconsider, within the 30-day period shall be deemed to constitute a decision not to reconsider.~~

~~E. The Board's final findings shall be attached to the District's building permit application and shall be considered as prima facie evidence of compliance with the applicable King County development standards. (Ord. 10870 § 634 (part), 1993).~~

21A.42.150 Modifications and expansions of uses or developments authorized by existing land use permits - Permits defined. For the purposes of this chapter, a land use permit shall mean a conditional use permit, special use permit, unclassified use permit, or planned unit development. ~~(Ord. 13130 § 7, 1998).~~

21A.42.160 Modifications or expansions of uses or developments authorized by existing land use permits - When use now permitted outright. Proposed modifications or expansions to a use or development authorized by an existing land use permit shall not require an amendment to the existing land use permit if the use is now permitted outright in the zone district in which it is located and shall not require findings pursuant to ~~K.C.C.~~ISDC 21A.42.170. ~~(Ord. 13130 § 8, 1998).~~

21A.42.170 Modifications or expansions of uses authorized by existing land use permits - Required findings. Modifications or expansions approved by the department shall be based on written findings that the proposed modifications or expansions provide the same level of protection for and compatibility with adjacent land uses as the original land use permit. ~~(Ord. 13130 § 9, 1998).~~

21A.42.180 Modifications and expansions - Use or development authorized by an existing planned unit development approval. Modifications and expansions of uses or developments authorized by an existing planned unit development approval shall be subject to the following provisions.

A. Any approved modification or expansion shall be recorded.

B. Modifications to building location and/or dimensions shall be reviewed pursuant to the code compliance process of ~~K.C.C.~~ISDC 21A.42.010 only when:

1. No buildings are located closer to the nearest property line(s), and
2. No increase in square footage of buildings is proposed.

C. Modifications beyond those permitted in subsection B and all expansions, shall be subject to the approval of a conditional use permit. ~~(Ord. 13130 § 10, 1998).~~

21A.42.190 Modifications and expansions - Uses or development authorized by existing conditional use, special use, or unclassified use permits.

A. The D~~d~~epartment may review and approve, pursuant to the code compliance process of ~~K.C.C.~~ISDC 21A.42.010, an expansion of a use or development authorized by an existing conditional use, special use or unclassified use permit provided that:

1. The expansion shall conform to all provisions of this title and the original land use permit, except that the project-wide amount of each of the following may be increased up to ten percent:

a. building square footage,
b. impervious surface,
c. parking, or
d. building height.

2. No subsequent expansions shall be approved under this subsection if the cumulative amount of such expansion exceeds the percentage prescribed in subsection A.1.

B. A conditional use permit shall be required for expansions within a use or development authorized by an existing conditional use permit if the expansions are not consistent with the provisions of subsection A.

C. A special use permit shall be required for expansions within a use or development authorized by an existing special use or unclassified use permit, if the expansions to either permit are not consistent with the provisions of subsection A.

D. This section shall not apply to modifications or expansions of telecommunication facilities, the provision for which are set forth in ~~K.C.C.~~ISDC 21A.26.140 or to modifications or expansions of nonconformances, the provisions for which are set forth in ~~K.C.C.~~ISDC 21A.32.065. ~~(Ord. 13130 § 11, 1998).~~

Chapter 21A.43
SCHOOL IMPACT FEES

Sections:

21A.43.005 Authority.
21A.43.010 Purpose.
21A.43.020 Impact fee program elements.
21A.43.030 Fee calculations.
21A.43.040 Fee collection.
21A.43.050 Assessment of impact fees.
21A.43.060 ~~Effective date.~~Not Used.
21A.43.070 Adjustments, exceptions, and appeals.
21A.43.080 Exemption or reduction for low or moderate income housing.
21A.43.090 Impact fee accounts and refunds.

21A.43.005 Authority. The provisions of this chapter for the assessment and collection of impact fees are adopted pursuant to Chapter 82.02 RCW. ~~(Ord. 11621 § 109, 1994).~~

21A.43.010 Purpose. The purpose of this chapter is to implement the capital facilities element of the Interim Comprehensive Plan and the Growth Management Act by:

A.Ensuring that adequate public school facilities and improvements are available to serve new development;

B.Establishing standards whereby new development pays a proportionate share of the cost for public school facilities needed to serve such new development;

C.Ensuring that school impact fees are imposed through established procedures and criteria so that specific developments do not pay arbitrary fees or duplicative fees for the same impact; and

D.Providing needed funding for growth-related school improvements to meet the future growth needs of ~~King County. (Ord. 11621 § 110, 1994).~~
The City of Sammamish.

21A.43.020 Impact fee program elements. A. Impact fees will be assessed on every new dwelling unit in the district for which a fee schedule has been established.

B.Impact fees will be imposed on a district-by-district basis, on behalf of any school district which provides to the ~~county~~ City a capital facilities plan, the district's standards of service for the various grade spans, estimates of the cost of providing needed facilities and other capital improvements, and the data from the district called for by the formula in ~~K.C.C.~~ISDC 21A.43.030. The actual fee schedule for the district will be adopted by ordinance based on this information and the fee calculation set out for ~~K.C.C.~~ ISDC 21A.43.030. Any impact fee imposed shall be reasonably related to the impact caused by the development and shall not exceed a proportionate share of the cost of system improvements that are reasonably related to the development. The impact fee formula shall account in the fee calculation for future revenues the district will receive from the development. The ordinance

adopting the fee schedule shall specify under what circumstances the fee may be adjusted in the interests of fairness.

C. The impact fee shall be based on a capital facilities plan developed by the district and approved by the school board, and adopted by reference by the ~~county~~ City of Sammamish as part of the capital facilities element of the Interim comprehensive plan for the purpose of establishing the fee program. ~~(Ord. 11621 § 111, 1994).~~

21A.43.030 Fee calculations. A. The fee for each district shall be calculated based on the formula set out in Attachment A. ~~to Ordinance 11621*.~~

B. Separate fees shall be calculated for single family and multi-family residential units and separate student generation rates must be determined by the district for each type of residential unit. For purposes of this chapter single family units shall mean single detached dwelling units, and multi-family units shall mean townhouses and apartments.

C. The fee shall be calculated on a district-by-district basis using the appropriate factors and data to be supplied by the district, as indicated in Attachment A. ~~to Ordinance 11621*.~~ The fee calculations shall be made on a district-wide basis to assure maximum utilization of all school facilities in the district used currently or within the last two years for instructional purposes.

D. The formula in Attachment A ~~to Ordinance 11621~~ also provides a credit for the anticipated tax contributions that would be made by the development based on historical levels of voter support for bond issues in the school district.

E. The formula in Attachment A ~~to Ordinance 11621~~ also provides for a credit for school facilities or sites actually provided by a developer which the school district finds to be acceptable. ~~(Ord. 13338 § 15, 1998; Ord. 12148 § 1, 1996; Ord. 11621 § 112, 1994).~~

21A.43.040 Fee collection. Fees shall be collected by the D~~d~~epartment of Community D~~d~~evelopment ~~and environmental services~~ and maintained in a separate account for each school district, pursuant to ~~K.C.C.~~ISDC 21A.43.070. Fees shall be paid to the district pursuant to administrative rules of an interlocal agreement between the ~~county~~ City and the district. ~~(Ord. 11621 § 113, 1994).~~

21A.43.050 Assessment of impact fees. A. In school districts where impact fees have been adopted by ~~county~~ City ordinance and except as provided in ~~K.C.C.~~ISDC 21A.43.080, the ~~county~~ City shall collect impact fees, based on the schedules set forth in each ordinance establishing the fee to be collected for the district, from any applicant seeking development approval from the City~~county~~ where such development activity requires final plat, PUD or UPD approval or the issuance of a residential building permit or a mobile home permit and the fee for the lot or unit has not been previously paid. No approval shall be granted and no permit shall be issued until the required school impact fees set forth in the district's impact fee schedule contained in ~~K.C.C.~~ISDC Title 27 have been paid.

B. For a plat, PUD or UPD applied for on or after the effective date of the ordinance adopting the fee for the district in question receiving final approval, fifty percent of the impact fees due on the plat, PUD or UPD shall be assessed and collected from the applicant at the time of final approval, using the impact fee schedules in effect when the plat, PUD or UPD was approved. The balance of the assessed fee shall be allocated to the dwelling units in the project, and shall be collected when the building permits

~~*Available at the office of the clerk of the council.~~

are issued. Residential developments proposed for short plats shall be governed by subsection D of this section.

C. If on the effective date of an ordinance adopting an impact fee for a district, a plat, PUD or UPD has already received preliminary approval, such plat, PUD or UPD shall not be required to pay fifty percent (50%) of the impact fees at the time of final approval, but the impact fees shall be assessed and collected from the lot owner at the time the building permits are issued, using the impact fee schedules in effect at the time of building permit application. If on the effective date of a district's ordinance, an applicant has applied for preliminary plat, PUD or UPD approval, but has not yet received such approval, the applicant shall follow the procedures set forth in subsection B of this section.

D. For existing lots or lots not covered by subsection B of this section, application for single family and multifamily residential building permits, mobile home permits, and site plan approval for mobile home parks, the total amount of the impact fees shall be assessed and collected from the applicant when the building permit is issued, using the impact fee schedules in effect at the time of permit application.

E. ~~Notwithstanding the provisions of this section, any application for preliminary plat, PUD or UPD approval submitted before January 22, 1991, shall not be required to pay school impact fees at the time of final plat, PUD or UPD approval. However, where the county has adopted a fee ordinance for the district, the full impact fee in effect when the building permits were applied for shall be paid by such developments at the time the building permits are issued if the applications for the building permits are submitted after January 22, 1991.~~Not Used.

F. Any application for preliminary plat, PUD or UPD approval or multifamily zoning which has been approved subject to conditions requiring the payment of impact fees established pursuant to this chapter, shall be required to pay the fee in accordance with the condition of approval. ~~(Ord. 11621 § 114, 1994).~~

21A.43.060 Effective Date. ~~As of September 10, 1993, no fee shall be assessed or collected on any pending building permit which had been applied for prior to the effective date of the impact fee. (Ord. 11621 § 115, 1994).~~Not Used.

21A.43.070 Adjustments, exceptions, and appeals.

A. The following are excluded from the application of the impact fees:

1. Any form of housing exclusively for the senior citizen, including nursing homes and retirement centers, so long as these uses are maintained;

2. Reconstruction, remodeling, or replacement of existing dwelling units which does not result in additional new dwelling units. In the case of replacement of a dwelling, a complete application for a building permit must be submitted within three years after it has been removed or destroyed;

3. Shelters for temporary placement, relocation facilities, transitional housing facilities and Community Residential Facilities as defined in ~~K.C.C.~~ISDC 21A.06.220;

4. Any development activity that is exempt from the payment of an impact fee pursuant to RCW 82.02.100, due to mitigation of the same system improvement under the State Environmental Policy Act;

5. Any development activity for which school impacts have been mitigated pursuant to a condition of plat, PUD or UPD approval to pay fees, dedicate land or construct or improve school facilities, unless the condition of the plat, PUD or UPD approval provides otherwise; provided that the condition of the plat, PUD or UPD approval predates the effective date of a school district's fee implementing ordinance;

6. Any development activity for which school impacts have been mitigated pursuant to a voluntary agreement entered into with a school district to pay fees, dedicate land or construct or improve school facilities, unless the terms of the voluntary agreement provide otherwise; provided that the agreement predates the effective date of a school district's fee implementing ordinance;

7. Housing units which fully qualify as housing for persons age 55 and over meeting the requirements of the Federal Housing Amendments Act of 1988, 42 U.S.C. 3607(b)(2)(c) and (b)(3), as subsequently amended, and which have recorded covenants or other legal arrangements precluding school-aged children as residents in those units;

8. Mobile homes permitted as temporary dwellings pursuant to ~~K.C.C.~~ISDC 21A.32.170; and

9. Accessory dwelling units as defined in ~~K.C.C.~~ISDC 21A.06.350 and ~~K.C.C.~~ISDC 21A.08.030B.7.a.

B. Arrangement may be made for later payment with the approval of the school district only if the district determines that it will be unable to use or will not need the payment until a later time, provided that sufficient security, as defined by the district, is provided to assure payment. Security shall be made to and held by the school district, which will be responsible for tracking and documenting the security interest.

C. The fee amount established in the schedule shall be reduced by the amount of any payment previously made for the lot or development activity in question, either as a condition of approval or pursuant to a voluntary agreement with a school district entered into after the effective date of a school district's fee implementing ordinance.

D. After the effective date of a school district's fee implementing ordinance, whenever a development is granted approval subject to a condition that the developer actually provide school sites, school facilities, or improvements to school facilities acceptable to the district, or whenever the developer has agreed, pursuant to the terms of a voluntary agreement with the school district, to provide land, provide school facilities, or make improvements to existing facilities, the developer shall be entitled to a credit for the value of the land or actual cost of construction against the fee that would be chargeable under the formula provided by this chapter. The land value or cost of construction shall be estimated at the time of approval, but must be documented. If construction costs are estimated, the documentation shall be confirmed after the construction is completed to assure that an accurate credit amount is provided. If the land value or construction costs are less than the calculated fee amount, the difference remaining shall be chargeable as a school impact fee.

E. Impact fees may be adjusted by the ~~county~~City, at the ~~county's~~ City's discretion, if one of the following circumstances exist, provided that the discount set forth in the fee formula fails to adjust for the error in the calculation or fails to ameliorate for the unfairness of the fee:

1. The developer demonstrates that an impact fee assessment was incorrectly calculated; or

2. Unusual circumstances identified by the developer demonstrate that if the standard impact fee amount was applied to the development, it would be unfair or unjust.

F. A developer may provide studies and data to demonstrate that any particular factor used by the district may not be appropriately applied to the development proposal, but the district's data shall be presumed valid unless clearly demonstrated to be otherwise by the proponent.

G.Any appeal of the decision of the Ddirector or the Hhearing Eexaminer with regard to imposition of an impact for or fee amounts shall follow the appeal process for the underlying permit and not be subject to a separate appeal process. Where no other administrative appeal process is available, an appeal may be taken to the Hhearing Eexaminer using the appeal procedures for variances. Any errors in the formula identified as a result of an appeal should be referred to the City Ceouncil for possible modification.

H.Impact fees may be paid under protest in order to obtain a building permit or other approval of development activity, when an appeal is filed. ~~(Ord. 12148 § 2, 1996: Ord. 11621 § 116, 1994).~~

21A.43.080 Exemption or reduction for low or moderate income housing.

A.Low or moderate income housing projects being developed by public housing agencies or private non-profit housing developers shall be exempt from the payment of school impact fees. The amount of the school impact fees not collected from low or moderate income household development shall be paid from public funds other than impact fee accounts. The impact fees for these units shall be considered paid for by the district through its other funding sources, without the district actually transferring funds from its other funding sources into the impact fee account. The ~~planning and community development division~~Department of Community Development shall review proposed developments of low or moderate income housing by such public or non-profit developers pursuant to criteria and procedures adopted by administrative rule, and shall ~~advise the department of development and environmental services as to~~determine whether the project qualifies for the exemption.

B.Private developers who dedicate residential units for occupancy by low or moderate income households may apply to the ~~division~~ Department for reductions in school impact fees pursuant to the criteria established for public housing agencies and private non-profit housing developers pursuant to subsection A, and subject to the provisions of subsection A. The ~~division~~ Department shall review proposed developments of low or moderate income housing by such private developers pursuant to criteria and procedures adopted by administrative rule, and shall ~~advise the department of development and environmental services as~~ determine~~to~~ whether the project qualifies for the exemption. If the ~~division~~ Department recommends the exemption, ~~the department of development and environmental services~~ it shall reduce the calculated school impact fee for the development by an amount that is proportionate to the number of units in the development that satisfy the adopted criteria.

C.Individual low or moderate income home purchasers (as defined pursuant to the King County Comprehensive Housing Affordability Strategy (CHAS) who are purchasing homes at prices within their eligibility limits based on standard lending criteria and meet other means tests established by rule ~~by the division~~ are exempted from payment of the impact fee, provided that at such time as the property in question is transferred to another owner who does not qualify for the exemption, at which time the fee shall be due and payable.

D.The ~~division~~ Department is hereby instructed and authorized to adopt, pursuant to ~~K.C.C.~~ISDC Chapter 2.98, administrative rules to implement this section. ~~Such rules shall provide for the administration of this program and shall:~~

~~1. Encourage the construction of housing for low or moderate income households by public housing agencies or private non-profit housing developers participating in publicly sponsored or subsidized housing programs;~~

~~2. Encourage the construction in private developments of housing units for low or moderate income households that are in addition to units required by another housing program or development condition;~~

~~3. Ensure that housing that qualifies as low or moderate cost meets appropriate standards regarding household income, rent levels or sale prices, location, number of units and development size; and~~

~~4. Ensure that developers who obtain an exemption from or reduction of school impact fees will in fact build the proposed low or moderate cost housing and make it available to low or moderate income households for a minimum of fifteen (15) years.~~

~~5. Ensure that individual low or moderate income purchasers meet appropriate eligibility standards based on income and other financial means tests.~~

E. As a condition of receiving an exemption under paragraph B or C, the owner must execute and record a ~~county~~City-drafted lien, covenant, and/or other contractual provision against the property for a period of ten (10) years for individual owners, and fifteen (15) years for private developers, guaranteeing that the proposed development will continue to be used for low or moderate income housing. In the event that the pattern of development or the use of the development is no longer for low or moderate income housing, then the owner shall pay the impact fee amount from which the owner or any prior owner was exempt. The lien, covenant, or other contractual provision shall run with the land and apply to subsequent owners. ~~(Ord. 11621 § 117, 1994).~~

21A.43.090 Impact fee accounts and refunds. A. Impact fee receipts shall be earmarked specifically and retained in a special interest-bearing account established by the ~~county~~ City solely for the district's school impact fees. All interest shall be retained in the account and expended for the purpose or purposes identified in subsection B. Annually, the ~~county~~City, ~~based in part on the report submitted by the district pursuant to Section 21A.28.152~~ shall prepare a report on each impact fee account showing the source and amount of all moneys collected, earned or received, and capital or system improvements that were financed in whole or in part by impact fees.

B. Impact fees for the district's system improvements shall be expended by the district for capital improvements including but not limited to school planning, land acquisition, site improvements, necessary off-site improvements, construction, engineering, architectural, permitting, financing, and administrative expenses, relocatable facilities, capital equipment pertaining to educational facilities, and any other expenses which could be capitalized, and which are consistent with the school district's capital facilities plan.

C. In the event that bonds or similar debt instruments are issued for the advanced provision of capital facilities for which impact fees may be expended and where consistent with the provisions of the bond covenants, impact fees may be used to pay debt service on such bonds or similar debt instruments to the extent that the facilities or improvements provided are consistent with the requirements of this section.

D. Impact fees shall be expended or encumbered (i.e. committed as part of the funding for a facility for which the publicly funded share has been assured, or building permits applied for, or construction contracts let) by the district for a permissible use within six (6) years of receipt by the City~~county~~, unless there exists an extraordinary and compelling reason for fees to be held longer than six (6) years. Such extraordinary or compelling reasons shall be identified to the City~~county~~ by the district. The ~~county~~ City must prepare written findings concurring with the district's reasons, and authorizing the later encumbrance or expenditure of the fees prior to the district so encumbering or expending the funds, or directing a refund of the fees.

E. The current owner of property on which an impact fee has been paid may receive a refund of such fees if the impact fees have not been expended or encumbered within six (6) years of receipt of the funds by the City~~county~~. In determining whether impact fees have been encumbered, impact fees shall be considered encumbered on a first in, first out basis. The City~~county~~ shall notify potential claimants by first-class mail deposited with the United States
Postal Service addressed to the owner of the property as shown in the C~~c~~ounty tax records.

F. An owner's request for a refund must be submitted to the ~~county council~~City Council in writing within one (1) year of the date the right to claim the refund arises or the date that notice is given, whichever date is later. Any impact fees that are not expended or encumbered within these time limitations, and for which no application for a refund has been made within this one (1) year period, shall be retained and expended consistent with the provisions of this section. Refunds of impact fees shall include any interest earned on the impact fees.

G. Should the ~~county~~ City seek to terminate any or all school impact fee requirements, all unexpended or unencumbered funds, including interest earned, shall be refunded to the current owner of the property for which a school impact fee was paid. Upon the finding that any or all fee requirements are to be terminated, the ~~county~~ City shall place notice of such termination and the availability of refunds in a newspaper of general circulation at least two (2) times and shall notify all potential claimants by first-class mail addressed to the owner of the property as shown in the county tax records. All funds available for refund shall be retained for a period of one (1) year. At the end of one (1) year, any remaining funds shall be retained by the City~~county~~, but must be expended for the district, consistent with the provisions of this section. The notice requirement set forth above shall not apply if there are no unexpended or unencumbered balances within the account or accounts being terminated.

H. A developer may request and shall receive a refund, including interest earned on the impact fees, when:

1. The developer does not proceed to finalize the development activity as required by statute or ~~county~~ City code or the Uniform Building Code, and

2. No impact on the district has resulted. "Impact" shall be deemed to include cases where the district has expended or encumbered the impact fees in good faith prior to the application for a refund. In the event that the district has expended or encumbered the fees in good faith, no refund shall be forthcoming. However, if within a period of three (3) years, the same or subsequent owner of the property proceeds with the same or substantially similar development activity, the owner shall be eligible for a credit. The owner must petition the City~~county~~ and provide receipts of impact fees paid by the owner for a development of the same or substantially similar nature on the same property or some portion thereof. The ~~county~~ City shall determine whether to grant a credit, and such determinations may be appealed by following the procedures set forth in Section 21A.43.070.

I. Interest due upon the refund of impact fees required by this section shall be calculated according to the average rate received by the ~~county~~ City or the district on invested funds throughout the period during which the fees were retained. ~~(Ord. 11621 § 118, 1994).~~

Chapter 21A.44
DECISION CRITERIA

Sections:

21A.44.010 Purpose.
21A.44.020 Temporary use permit.
21A.44.030 Variance.
21A.44.040 Conditional use permit.
21A.44.050 Special use permit.
21A.44.060 Zone reclassification.
21A.44.070 Urban plan development permit.
21A.44.080 ~~Fully contained community (FCC) permit.~~

21A.44.010 Purpose. The purposes of this chapter are to allow for consistent evaluation of land use applications and to protect nearby properties from the possible effects of such requests by:

A. Providing clear criteria on which to base a decision;

B. Recognizing the effects of unique circumstances upon the development potential of a property;

C. Avoiding the granting of special privileges;

D. Avoiding development which may be unnecessarily detrimental to neighboring properties;

E. Requiring that the design, scope and intensity of development is in keeping with the physical aspects of a site and adopted land use policies for the area; and

F. Providing criteria which emphasize protection of the general character of neighborhoods. ~~(Ord. 10870 § 622, 1993).~~

21A.44.020 Temporary use permit. A temporary use permit shall be granted by the ~~county~~City, only if the applicant demonstrates that:

A. The proposed temporary use will not be materially detrimental to the public welfare;

B. The proposed temporary use is compatible with existing land uses in the immediate vicinity in terms of noise and hours of operation;

C. ~~The proposed temporary use, if located in a resource zone, will not be materially detrimental to the use of the land for resource purposes and will provide adequate off-site parking if necessary to protect against soil compaction;~~Not Used.

D. Adequate public off-street parking and traffic control for the exclusive use of the proposed temporary use can be provided in a safe manner; and

E. The proposed temporary use is not otherwise permitted in the zone in which it is proposed. ~~(Ord. 10870 § 623, 1993).~~

21A.44.030 Variance. A variance shall be granted by the ~~county~~City, only if the applicant demonstrates all of the following:

A. The strict enforcement of the provisions of this title creates an unnecessary hardship to the property owner;

B. The variance is necessary because of the unique size, shape, topography, or location of the subject property;

C. The subject property is deprived, by provisions of this title, of rights and privileges enjoyed by other properties in the vicinity and under an identical zone;

D. The variance does not create health and safety hazards, is not materially detrimental to the public welfare or is not unduly injurious to property or improvements in the vicinity;

E. The variance does not relieve an applicant from any of the procedural provisions of this title;

F. The variance does not relieve an applicant from any standard or provision that specifically states that no variance from such standard or provision is permitted;

G. The variance does not relieve an applicant from conditions established during prior permit review or from provisions enacted pursuant to ~~K.C.C.~~ ISDC 21A.38, Property-Specific Development Standards;

H. The variance does not allow establishment of a use that is not otherwise permitted in the zone in which the proposal is located;

I. The variance does not allow the creation of lots or densities that exceed the base residential density for the zone by more than 10 percent;

J. The variance is the minimum necessary to grant relief to the applicant;

K. The variance from setback or height requirements does not infringe upon or interfere with easement or covenant rights or responsibilities; and

L. The variance does not relieve an applicant from any provisions of ~~K.C.C.~~ISDC 21A.24, Sensitive Areas, except for the required buffer widths and building setbacks set forth in ~~K.C.C.~~ISDC 21A.24.200, 21A.24.280, 21A.24.310, 21A.24.320, or 21A.24.360. ~~(Ord. 12479 § 1, 1996: Ord. 11621 § 107, 1994: Ord. 10870 § 624, 1993).~~

21A.44.040 Conditional use permit. A conditional use permit shall be granted by the ~~county~~City, only if the applicant demonstrates that:

A. The conditional use is designed in a manner which is compatible with the character and appearance of an existing, or proposed development in the vicinity of the subject property;

B. The location, size and height of buildings, structures, walls and fences, and screening vegetation for the conditional use shall not hinder neighborhood circulation or discourage the permitted development or use of neighboring properties;

C. The conditional use is designed in a manner that is compatible with the physical characteristics of the subject property;

D. Requested modifications to standards are limited to those which will mitigate impacts in a manner equal to or greater than the standards of this title;

E. The conditional use is not in conflict with the health and safety of the community;

F. The conditional use is such that pedestrian and vehicular traffic associated with the use will not be hazardous or conflict with existing and anticipated traffic in the neighborhood; and

G. The conditional use will be supported by adequate public facilities or services and will not adversely affect public services to the surrounding area or conditions can be established to mitigate adverse impacts on such facilities. ~~(Ord. 11621 § 108, 1994: Ord. 10870 § 625, 1993).~~

21A.44.050 Special use permit. A special use permit shall be granted by the ~~county~~City, only if the applicant demonstrates that:

A. The characteristics of the special use will not be unreasonably incompatible with the types of uses permitted in surrounding areas;

B. The special use will not materially endanger the health, safety and welfare of the community;

C. The special use is such that pedestrian and vehicular traffic associated with the use will not be hazardous or conflict with existing and anticipated traffic in the neighborhood;

D.The special use will be supported by adequate public facilities or services and will not adversely affect public services to the surrounding area or conditions can be established to mitigate adverse impacts;

E.The location, size and height of buildings, structures, walls and fences, and screening vegetation for the special use shall not hinder or discourage the appropriate development or use of neighboring properties; and

F. The special use is not in conflict with the policies of the Interim Comprehensive Plan or the basic purposes of this title. ~~(Ord. 10870 § 626, 1993).~~

21A.44.060 Zone reclassification. A zone reclassification shall be granted only if the applicant demonstrates that the proposal complies with the criteria for approval specified in ~~K.C.C.~~ ISDC Title 20.24.180 and 20.24.190 and is consistent with the Interim Comprehensive Plan. ~~and applicable community and functional plans. (Ord. 10870 § 627, 1993).~~

21A.44.070 Urban plan development permit. An urban plan development permit shall be granted only if the applicant demonstrates compliance with the provisions of ~~K.C.C.~~ISDC 21A.39. ~~(Ord. 10870 § 628, 1993).~~

21A.44.080 ~~Fully contained community (FCC) permit. An application for a FCC permit shall be granted only if the applicant demonstrates compliance with the provisions of K.C.C. 21A.38 and 21A.39. (Ord. 12171 § 9, 1996).~~Not Used.

Chapter 21A.50
ENFORCEMENT

Sections:

21A.50.010 Purpose.
21A.50.020 Authority and application.
21A.50.030 Violations defined.
21A.50.040 Permit suspension, revocation or modification.
21A.50.050 Initiation of revocation or modification proceedings.

21A.50.010 Purpose. The purpose of this chapter is to promote compliance with this title by establishing enforcement authority, defining violations, and setting standards for initiating the procedures set forth in ~~K.C.C.~~ISDC Title 23, Enforcement, when violations of this title occur. ~~(Ord. 10870 § 629, 1993).~~

21A.50.020 Authority and application. The D~~d~~irector is authorized to enforce the provisions of this code, any implementing administrative rules adopted under ~~K.C.C.~~ISDC 2.98, administration, and approval conditions attached to any land use approval, through revocation or modification of permits, or through the enforcement, penalty and abatement provisions of ~~K.C.C.~~ISDC Title 23, Enforcement. ~~(Ord. 10870 § 630, 1993).~~

21A.50.030 Violations defined. No building permit or land use approval in conflict with the provisions of this title shall be issued. Structures or uses which do not conform to this title, except legal nonconformances specified in ~~K.C.C.~~ISDC 21A.32 and approved variances, are violations subject to the enforcement, penalty and abatement provisions of Title 23, including but not limited to:

A. Establishing a use not permitted in the zone in which it is located;

B. Constructing, expanding or placing a structure in violation of setback, height and other dimensional standards in this title;

C. Establishing a permitted use without complying with applicable development standards set forth in other titles, ordinances, rules or other laws, including but not limited to, ~~road~~ street construction, surface water management, and the Fire Code~~, and rules of the department of public health~~;

D. Failing to carry out or observe conditions of land use or permit approval, including contract development standards;

E. Failing to secure required land use or permit approval prior to establishing a permitted use; and

F. Failing to maintain site improvements, such as landscaping, parking or drainage control facilities as required by this code. ~~or other King County ordinances. (Ord. 10870 § 631, 1993).~~

21A.50.040 Permit suspension, revocation or modification. A. Permit suspension, revocation or modification shall be carried out through the procedures set forth in ~~K.C.C.~~ISDC Title 23. Any permit, variance, or other land use approval issued by ~~King County~~the City pursuant to this title may be suspended, revoked or modified on one or more of the following grounds:

1. The approval was obtained by fraud;
2. The approval was based on inadequate or inaccurate information;
3. The approval, when given, conflicted with existing laws or regulations applicable thereto;

4. An error of procedure occurred which prevented consideration of the interests of persons directly affected by the approval;

5. The approval or permit granted is being exercised contrary to the terms or conditions of such approval or in violation of any statute, law or regulation;

6. The use for which the approval was granted is being exercised in a manner detrimental to the public health or safety;

7. The holder of the permit or approval interferes with the Ddirector or any authorized representative in the performance of his or her duties; or

8. The holder of the permit or approval fails to comply with any notice and order issued pursuant to ~~K.C.C.~~ISDC Title 23.

B. Authority to revoke or modify a permit or land use approval shall be exercised by the issuer, as follows:

1. The ~~council~~ City Council may, after a recommendation from the ~~examiner~~Hearing Examiner, revoke or modify any residential density incentive approval, transfer of development credit, Urban Planned Development, preliminary subdivision, zone reclassification or special use permit;

2. The ~~adjustor~~ Hearing Examiner may revoke or modify any variance or conditional use permit, provided that, if it was reviewed through a public hearing, a new public hearing shall be held on its revocation or modification; and

3. The Ddirector may revoke or modify any permit or other land use approval issued by the Ddirector. ~~(Ord. 10870 § 632, 1993).~~

21A.50.050 Initiation of revocation or modification proceedings. A. The Ddirector may suspend any permit, variance or land use approval issued by ~~any King County issuing agency and processed by~~ the Ddepartment pending its revocation or modification, or pending a public hearing on its revocation or modification;

B. The ~~issuing agency~~Department may initiate proceedings to revoke or modify any permit or land use approval it has issued; and

C. Persons who are aggrieved may petition the ~~issuing agency~~Department to initiate revocation or modification proceedings, and may petition the Ddirector to suspend a permit, variance or land use approval pending a public hearing on its revocation or modification. ~~(Ord. 10870 § 633, 1993).~~

EXHIBIT "A"
Ordinance O99-42

Title 23
DEVELOPMENT CODE COMPLIANCE

Chapters:

23.01 Name and Purpose
23.02 General Provisions
23.10 Not Used.
23.20 Citations
23.24 Notice and Orders
23.28 Stop Work Orders
23.32 Civil Fines and Civil Penalties
23.36 Appeals and Judicial Enforcement
23.40 Liens
23.99 Miscellaneous Provisions

Chapter 23.02
GENERAL PROVISIONS

Sections:

23.02.010 Definitions.
23.02.020 Relationship to growth management plan.
23.02.030 Declaration of public nuisance, misdemeanor.
23.02.040 Enforcement authority and administration.
23.02.050 Guidelines for departmental responses to complaints.
23.02.060 Initial investigation.
23.02.070 Procedures when probable violation identified.
23.02.080 Service - citation, notice and order and stop work order.
23.02.090 Voluntary compliance agreement authority.
23.02.100 Failure to meet terms of voluntary compliance agreement.
23.02.110 Right of entry.
23.02.120 Training and rulemaking.
23.02.130 Obligations of persons responsible for code compliance.

23.02.010 Definitions. The words and phrases designated in this section shall be defined for the purposes of this title as follows:

A. Abate. "Abate" means to take whatever steps are deemed necessary by the Director to return a property to the condition in which it existed before a civil code violation occurred or to assure that the property complies with applicable code requirements. Abatement may include, but is not limited to, rehabilitation, demolition, removal, replacement or repair.

B. Civil code violation. "Civil code violation" means and includes an act or omission contrary to:

1. Any ordinance, resolution, regulation or public rule of the City that regulates or protects the use and development of land or water, whether or not such ordinance, resolution or regulation is codified; and/or

2. The conditions of any permit, notice and order or stop work order issued pursuant to any such ordinance, resolution, regulation or public rule.

C. Director. "Director" means

the Director of the Department of Community Development, or his or her representatives authorized in writing.

2. Not Used.
3. Not Used
4. Not Used
5. Not Used.
6. Not Used.

D. Hearing examiner. "Hearing examiner" means the City of Sammamish Hearing Examiner, as provided in ISDC chapter 20.24.

E. Mitigate. "Mitigate" means to take measures, subject to City approval, to minimize the harmful effects of the violation where remediation is either impossible or unreasonably burdensome.

F. Permit. "Permit" means any form of certificate, approval, registration, license or any other written permission issued by the City. All conditions of approval, and all easements and use limitations shown on the face of a approved final plat map which are intended to serve or protect the general public are deemed conditions applicable to all subsequent plat property owners and their tenants and agents as permit requirements enforceable under this title.

D. In addition or as an alternative to utilizing the procedures set forth in this title, the Director may seek legal or equitable relief to abate any conditions or enjoin any acts or practices which constitute a civil code violation.

E. In addition or as an alternative to utilizing the procedures set forth in this title, the Director may assess or recover civil penalties accruing under this title by legal action filed in King County superior court by the City Attorney..

F. The provisions of this title shall in no way adversely affect the rights of the owner, lessee or occupant of any property to recover all costs and expenses incurred and required by this title from any person causing such violation.

G.
The Director may use the services of a collection agency in order to collect any fines, penalties, fees or costs owing under this title.

H. In administering the provisions for code enforcement, the Director shall have the authority to waive any one or more such provisions so as to avoid substantial injustice by application thereof to the acts or omissions of a public or private entity or individual, or acts or omissions on public or private property including, for example, property belonging to public or private utilities, where no apparent benefit has accrued to such entity or individual from a code violation and any necessary remediation is being promptly provided. For purposes of this clause, substantial injustice cannot be based on economic hardship.

I. The provisions of this title detailing the administration of code compliance procedures are intended only for the purpose of providing guidance to City employees and are not to be construed as creating a basis for appeal or a defense of any kind to an alleged violation.

J. The provisions of this title authorizing the enforcement of non-codified ordinances are intended to assure compliance with conditions of approval on plats, unclassified use permits, zone reclassifications and other similar permits or approvals which may have been granted by ordinances which have not been codified, and to enforce new regulatory ordinances which are not yet codified. The Department should be sensitive to the possibility that citizens may not be aware of these ordinances, and should give warnings prior to enforcing such ordinances, except in high risk cases.

23.02.050 Guidelines for departmental responses to complaints. A. The following guidelines should be applied by the Department, subject to Department resource limitations, when responding to code compliance complaints. The timelines identified below may be modified by Department rule, subject to council review and approval.

1. High risk investigations needing an urgent response (within twenty-four hours) include any cases in which:

a. there is an imminent likelihood of or actual bodily harm, damage to public resources or facilities, damage to real or personal property, public health exposure, or environmental damage or contamination; or

b. the sites and/or persons responsible for code compliance have a history of prior high or moderate risk violations.

2. Moderate risk investigations needing a prompt response (within seventy-two hours) include cases where:

a. there is risk of bodily harm, damage to public resources and/or facilities, damage to real or personal property, or environmental damage or contamination; or

b. the subject sites and/or persons responsible for code compliance have a history of prior low risk violations; or

c. there are ongoing moderate or low risk violations.

d. Not used.

3. Low risk investigations needing response as time permits (within two weeks of violation being identified by code compliance staff) include cases where:

a. the violation is non-emergent, does not fit within the high risk or moderate risk categories and has only minor public impacts; and

b. the violation is an isolated incident.

B. The response times set out in this section are not jurisdictional, and failure to meet them in any particular case shall not affect the City's authority to enforce City code provisions with regard to that case.

issued within sixty days from receipt of a complaint. Stop work orders should be issued promptly upon discovery of a violation in progress.

I. All complainants will be asked by staff at the time a complaint is filed if they wish to be kept advised of enforcement efforts. Any complainant who provides a mailing address and requests to be kept advised of enforcement efforts should be mailed a copy of all written warnings, voluntary compliance agreements, citations, notice and orders, stop work orders and notices of settlement conferences issued by the Department with regard to the alleged violation. Any complainant who is an aggrieved person may appeal a citation, notice and order, stop work order, a determination to enter into a voluntary compliance agreement or a determination not to issue a citation or order pursuant to the provisions of ISDC chapter 20.24, provided that the appeal shall be considered a civil proceeding, and any decision to pursue criminal sanctions shall remain the obligation of the City Attorney, as set out in ISDC 23.02.030.

23.02.080 Service - citation, notice and order, and stop work order.

A. Service of a citation or notice and order shall be made on a person responsible for code compliance by one or more of the following methods:

1. Personal service of a citation or notice and order may be made on the person identified by the Department as being responsible for code compliance, or by leaving a copy of the citation or notice and order at that person's house of usual abode with a person of suitable age and discretion who resides there.

2. Service directed to the landowner and/or occupant of the property may be made by posting the citation or notice and order in a conspicuous place on the property where the violation occurred and concurrently mailing notice as provided for below, if a mailing address is available.

3. Service by mail may be made for a citation or a notice and order by mailing two copies, postage prepaid, one by ordinary first class mail and the other by certified mail, to the person responsible for code compliance at his or her last known address, at the address of the violation, or at the address of the place of business of the person responsible for code compliance. The taxpayer's address as shown on the tax records of the County shall be deemed to be the proper address for the purpose of mailing such notice to the landowner of the property where the violation occurred. Service by mail shall be presumed effective upon the third business day following the day upon which the citation or notice and order was placed in the mail.

B. For notice and orders only, when the address of the person responsible for code compliance cannot reasonably be determined, service may be made by publication once in the City's newspaper of record.

C. Service of a stop work order on a person responsible for code compliance may be made by posting the stop work order in a conspicuous place on the property where the violation occurred or by serving the stop work order in any other manner permitted by this section.

D. The failure of the Director to make or attempt service on any person named in the citation, notice and order or stop work order shall not invalidate any proceedings as to any other person duly served.

23.02.090 Voluntary compliance agreement - authority. A. Whenever the Department determines that a code violation has occurred or is occurring, the Department shall make reasonable efforts to secure voluntary compliance from the person responsible for code compliance. Upon contacting the person responsible for code compliance, the Department may enter into a voluntary compliance agreement as provided for in this section.

B. A voluntary compliance agreement may be entered into at any time after issuance of a verbal or written warning, a citation, a notice and order or a stop work order and before an appeal is decided pursuant to ISDC chapter 20.24.

C. The voluntary compliance agreement is a written signed commitment by the person responsible for code compliance under which such person agrees to abate the violation, remediate the site, and/or mitigate the impacts of the violation. The voluntary compliance agreement shall include the following:

1. The name and address of the person responsible for code compliance; and

2. The address or other identification of the location of the violation; and

3. A description of the violation and a reference to the provision(s) of the ordinance, resolution or regulation which has been violated; and

preceding citation, notice and order or stop work order was required to have been filed or from the date the voluntary compliance agreement was entered into if there was no preceding stop work order, citation or notice and order.

B. The Department may issue a citation, notice and order or stop work order for failure to meet the terms of a voluntary compliance agreement.

23.02.110 Right of entry. It is the intention of the City Council that any entry made to private property for the purpose of inspection for code violations be accomplished in strict conformity with constitutional and statutory constraints on entry, and the holdings of relevant court cases regarding entry. The right-of-entry granted by this title shall not supersede those legal constraints. The Director is authorized to enter upon any property for the purpose of administering this title provided that, the Director shall make entry only if such entry is consistent with the constitutions and laws of the United States and the state of Washington. If so required by the constitutions and laws of the United States or the state of Washington, the Director shall apply to a court of competent jurisdiction for a search warrant authorizing access to such property for such purpose.

23.02.120 Training and rulemaking. A. In order to ensure strict conformity with the constraints on entry imposed by state and federal law and to assure that City employees deal with the public in a manner which respects the rights of private property owners, the Director shall develop and adopt internal procedures, protocols and training programs governing the conduct of searches by code compliance officers.

B. The Department shall adopt procedures to implement the provisions of this title, and specifically the guidelines set out in this chapter describing reasonable and appropriate protocols for investigating code violations.

23.02.130 Obligations of persons responsible for code compliance. A. It shall be the responsibility of any person identified as responsible for code compliance to bring the property into a safe and reasonable condition to achieve code compliance. Payment of fines, applications for permits, acknowledgment of stop-work orders and compliance with other remedies does not substitute for performing the corrective work required and having the property brought into compliance to the extent reasonably possible under the circumstances.

B. Persons determined to be responsible for code compliance pursuant to a citation or notice and order shall be liable for the payment of any civil fines, penalties and abatement costs, provided, however, that if a property owner affirmatively demonstrates that the action which resulted in the violation was taken without the owner's knowledge or consent by someone other than the owner or someone acting on the owner's behalf, that owner shall be responsible only for bringing the property into compliance to the extent reasonably feasible under the circumstances. Should the owner not correct the violation, only those abatement costs necessary to bring the property into a safe and reasonable condition, as determined by the Director, shall be assessed by the City. No civil fines or penalties shall be assessed against such an owner or his or her property interest.

citation issued under this title if the original citation was issued in error or if a party to a citation was incorrectly named. Such revocation or modification shall identify the reasons and underlying facts for revocation.

23.20.050 Remedy - civil fines. A citation shall carry a civil fine to be determined with reference to the schedule contained in ISDC chapter 23.32. The payment of civil fines does not relieve a person responsible for code compliance of any obligation to cure, abate or stop a violation.

23.24.030 Contents. The notice and order shall contain the following information:

A. The address, when available, or location of the civil code violation;

B. A legal description of the real property or the King County tax parcel number where the violation occurred or is located, or a description identifying the property by commonly used locators;

C. A statement that the Director has found the named person to have committed a civil code violation and a brief description of the violation or violations found;

D. A statement of the specific provisions of the ordinance, resolution, regulation, public rule, permit condition, notice and order provision or stop work order that was or is being violated;

E. The dollar amount of the civil penalty per separate violation;

F. A statement advising that any costs of enforcement that exceed the amount of the penalty may also be assessed against the person to whom the notice and order is directed;

G. A statement advising that the notice and order will be recorded against the property in the King County office of records and elections subsequent to service;

H. A statement of the corrective or abatement action required to be taken and that all required permits to perform the corrective action must be obtained from the proper issuing agency;

I. A statement advising that, if any required work is not commenced or completed within the time specified by the notice and order, a Director may
proceed to abate the violation and cause the work to be done and charge the costs thereof as a lien against the property and as a joint and several personal obligation of any persons responsible for code compliance;

J. A statement advising that, if any assessed penalty, fee or cost is not paid on or before the due date, the Director may charge the unpaid amount as a lien against the property where the civil code violation occurred if owned by a person responsible for code compliance and as a joint and several personal obligation of all persons responsible for code compliance;

K. A statement advising that any person named in the notice and order or having any record or equitable title in the property against which the notice and order is recorded may appeal from the notice and order to the Hearing Examiner within twenty-one days of the date of service of the notice and order;

L. A statement advising that a failure to correct the violations cited in the notice and order could lead to the denial of subsequent City of Sammamish permit applications on the subject property;

M. A statement advising that a failure to appeal the notice and order within the applicable time limits renders the notice and order a final determination that the conditions described in the notice and order existed and constituted a civil code violation, and that the named party is liable as a person responsible for code compliance; and

N. A statement advising the person responsible for code compliance of his or her duty to notify the Director of any actions taken to achieve compliance with the notice and order.

23.24.040 Recording. A. Whenever a notice and order is served on a person responsible for code compliance, the Director shall file a copy of the same with the King County office of records and elections.

B. When all violations specified in the notice and order have been corrected or abated the Director shall file a certificate of compliance with the King County office of records and elections. The certificate shall include a legal description of the property where the violation occurred and shall state that any unpaid civil penalties for which liens have been filed are still outstanding and continue as liens on the property.

23.24.050 Supplementation, revocation, modification. A. Whenever there is new information or a change in circumstances, the Director may add to, rescind in whole or part or otherwise modify a notice and order by issuing a supplemental notice and order. The supplemental notice and order shall be governed by the same procedures applicable to all notice and orders contained in this title.

B. The Director may revoke or modify a notice and order issued under this title if the original notice and order was issued in error or if a party to an order was incorrectly named.

4. Permit fees or costs were paid to the county by check and returned from a financial institution marked non-sufficient funds (NSF) or canceled; or

5. For a permit or approval that is subject to sensitive area review, the applicant has failed to disclose a change of circumstances on the development proposal site which materially affects an applicant's ability to meet the permit or approval conditions or which makes inaccurate the sensitive area study that was the basis for establishing permit or approval conditions.

B. Such suspension, revocation or modification shall be carried out through the notice and order provisions of this chapter and shall be effective upon the compliance date established by the notice and order. Such revocation, suspension or cancellation may be appealed to the Hearing Examiner using the appeal provisions of this title.

C. Notwithstanding any other provision of this title, a Director may immediately suspend operations under any permit by issuing a stop work order pursuant to ISDC chapter 23.28.

23.24.110 Remedies - denial of permit. A. The City may deny a development proposal permit, when, with regard to the site or project for which the permit application is submitted:

1. Any person has been found in violation and remains in violation of any ordinance, resolution, regulation or public rule of the City that regulates or protects the public health or the use and development of land or water, whether or not such ordinance, resolution, regulation or public rule is codified;

2. Any person has been found in violation and remains in violation of the conditions of any permit, notice and order or stop work order issued pursuant to any such ordinance, resolution, regulation or public rule; and/or

3. For any property which has been found in violation and remains in violation of ISDC chapter 21A.24 or of any rule, permit, approval, order, easement, plan or agreement issued thereunder.

B. In order to further the remedial purposes of this title, such denial may continue until the violation is cured by restoration accepted as complete by the City and by payment of any civil penalty imposed for the violation, except that permits or approvals shall be granted to the extent necessary to accomplish any required restoration or cure.

C. For the purposes of this section, "found in violation" means:

1. That a citation, notice and order or stop work order has been issued and not timely appealed; or

2. That a voluntary compliance agreement has been entered into; or

3. That the hearing examiner has determined that the violation has occurred and such determination has not been stayed or reversed on appeal.

23.24.120 Remedies - abatement - authorized. In addition to or as an alternative to any other judicial or administrative remedy, the Director may use the notice and order provisions of this title to order any person responsible for code compliance to abate the violation and to complete the work at such time and under such conditions as the Director determines reasonable under the circumstances. If the required corrective work is not commenced or completed within the time specified, the Director may proceed to abate the violation.

23.24.130 Remedies - abatement cost recovery. A. Abatement costs may be recovered pursuant to this chapter.

B. The Director shall keep an itemized account of costs incurred by the City in the abatement of any violation under this title. Upon completion of any abatement work, the Director shall prepare a report specifying a legal description of the real property where the abatement work occurred, the work done for each property, the itemized costs of the work, including legal and incidental expenses, and interest accrued.

23.24.140 Code compliance and abatement fund - authorized. All monies collected from the assessment of civil penalties and for abatement costs and work, except those monies designated for the Sensitive Areas Mitigation Fund as set forth in ISDC 21A.24, shall be allocated to support expenditures for abatement, and shall be accounted for through either creation of an account in the fund or other appropriate accounting mechanism.

Chapter 23.32
CIVIL FINES AND CIVIL PENALTIES

Sections:

23.32.010 Assessment schedule.
23.32.020 Civil penalty - definitions.
23.32.030 Duty to comply.
23.32.040 Civil penalty - sensitive areas.
23.32.050 Waivers.

23.32.010 Assessment Schedule. A. Civil fines and civil penalties for civil code violations shall be imposed for remedial purposes and shall be assessed for each violation identified in a citation, notice and order or stop work order pursuant to the following schedule:

1. Citations	$500
2. Notice and Orders and Stop Work Orders	
a. Basic initial penalty	$2,500
b. Additional initial penalties may be added in the following amounts for violations where there is:	
1) public health risk	+$500-2,500 depending on severity
2) environmental damage	+$500-2,500 depending on severity
3) damage to property	+$500-2,500 depending on severity
4) history of similar violations (less than three)	+$1000
5) history of similar violations (three or more)	+$2,500
6) economic benefit to person responsible for violation	+$1000
c. The above penalties may be offset by the following credits for efforts to comply:	
1) entering into a voluntary compliance agreement	-$500
2) full compliance with voluntary compliance agreement and no history of prior violations	-$1,500
3) full compliance with voluntary compliance agreement and history of less than three prior violations	-$1000

B. The total initial penalties assessed for notice and orders and stop work orders pursuant to this section shall apply for the first thirty day period following the issuance of the order, unless another time period is specified in the voluntary compliance agreement. If a voluntary compliance agreement is not entered into within that time period, and no appeal is filed, the penalties for the next fifteen day period shall be one hundred fifty percent of the initial penalties, and the penalties for the next fifteen day period shall be double the amount of the initial penalties.

C. Citations shall be subject to a one-time penalty only.

D. The Director may suspend civil penalties if the person responsible for code compliance has entered into a voluntary compliance agreement. Penalties shall begin to accrue again pursuant to the terms of the voluntary compliance agreement if any necessary permits applied for are denied, canceled or not pursued, or if corrective action identified in the voluntary compliance agreement is not completed as specified.

23.32.020 Civil penalty - definitions. For the purposes of assessing civil fines and penalties, "found in violation" means that:

Chapter 23.36
APPEALS AND JUDICIAL ENFORCEMENT

Sections:

23.36.010 Administrative appeal - filing requirements.
23.36.020 Administrative appeal - procedures.
23.36.030 Administrative appeal - final order.
23.36.040 Judicial enforcement - petition for enforcement.
23.36.050 Judicial enforcement - limitation on defenses.

23.36.010 Administrative appeal - filing requirements. A. Any person issued a citation or named in a notice and order or stop work order, any owner of the land where the violation for which a citation, notice and order or stop work order is issued occurred and any complainant who is an aggrieved person pursuant to ISDC Title 20 and requests to be kept advised pursuant to ISDC. 23.02.070H may file a notice of appeal of a citation, notice and order, stop work order, determination to enter into a voluntary compliance agreement or a determination not to issue a citation or order within twenty-one days of the service of the citation, notice and order or stop work order or issuance of a voluntary compliance agreement or determination not to issue a citation or order with the issuing department.

B. Any person named in a citation may appeal the citation by signing the citation, indicating on the citation that a hearing is requested, and returning the citation to the Department within twenty-one days of its service.

C. A notice of appeal shall comply with the form, content and service requirements of ISDC chapters 20.20 and 20.24 and rules promulgated thereunder.

23.36.020 Administrative appeal - procedures. A. The appeal hearing shall be conducted as provided for in ISDC chapter 20.24, except that where specific provisions in this title conflict with ISDC chapter 20.24, the provisions of this title shall govern.

B. Enforcement of any notice and order of the Director issued pursuant to this title shall be stayed as to the appealing party during the pendency of any administrative appeal under this title, except when the Director determines that the violation poses a significant threat of immediate and/or irreparable harm and so states in any notice and order issued.

C. Enforcement of any stop work order of the Director issued pursuant to this title shall not be stayed during the pendency of any administrative appeal under this title.

D. When multiple citations, stop work orders, or notices and orders have been issued simultaneously for any set of facts constituting a violation, only one appeal of all the enforcement actions shall be allowed.

23.36.030 Administrative appeal - final order. A. Following review of the evidence submitted, the Hearing Examiner shall make written findings and conclusions and shall affirm or modify the citation, notice and order or stop work order previously issued if the Examiner finds that a violation has occurred. The examiner shall uphold the appeal and reverse the citation or order if the examiner finds that no violation has occurred.

B. If an owner of property where a violation has occurred has affirmatively demonstrated that the violation was caused by another person or entity not the agent of the property owner and without the property owner's knowledge or consent, such property owner shall be responsible only for abatement of the violation. Strict compliance with permit requirements may be waived regarding the performance of such an abatement in order to avoid doing substantial injustice to a non-culpable property owner.

C. The Hearing Examiner's final order shall be final and conclusive unless proceedings for review of the decision are properly commenced in superior court within the time period specified by state law.

Chapter 23.40
LIENS

Sections:

23.40.010 Filing and contents.
23.40.020 Supplemental.
23.40.030 Abatement lien - tax bill authorized.
23.40.040 Limitation of action - duration.

23.40.010 Filing and contents. A. Within ninety days from the date any civil penalty, civil fine, abatement cost, or enforcement cost is due pursuant to this title, the Director may file a lien against the property of a person responsible for code compliance for the amount owing with the King County office of records and elections.

B. The lien shall contain the following information:

1. The City of Sammamish code provision violated;
2. A brief description of the violation and its duration at the date of filing;
3. A brief description of the abatement work done, if any, and who performed the abatement work;
4. The owner of the property, if known, or a statement that the owner is not known;
5. A legal description of the property;
6. The amount of penalties, fines or costs that are owing; and
7. A sworn statement signed by the Director that the Director believes the claim is just.

23.40.020 Lien - supplemental. The Director may file supplemental liens with the King County office of records and elections to update information regarding penalties, fines, costs or fees contained in any existing lien.

23.40.030 Abatement lien - tax bill authorized. A. The Sammamish City Council finds that there exist within the incorporated limits of the City dwellings that are unfit for human habitation, and buildings, structures and premises or portions thereof that are unfit for other uses due to conditions that are inimical to the health and welfare of City residents.

B. In the case of such unfit dwellings, buildings, structures, and premises or portions thereof, the Director, as an alternative to any other remedy provided in this title, may have abatement costs certified, entered and collected by the King County finance division as taxes according to the procedures and limitations set forth in RCW 35.80.030.

23.40.040 Lien - limitation of action - duration. A. No lien created by this title binds the property subject to the lien for a period longer than three years after the lien claim has been recorded, unless an action to enforce that lien is commenced in the proper court within three years after such recording.

A. When all penalties and/or abatement costs assessed against the property owner have been paid, the Director shall expeditiously file a satisfaction of lien with the King County office of records and elections. The satisfaction shall include a legal description of the property where the violation occurred.

Chapter 25.08
DEFINITIONS

Sections:

25.08.010 Applicability of RCW and WAC definitions.
25.08.015 Applicant.
25.08.020 Access.
25.08.030 Aquatic resource practices.
25.08.040 Average grade level.
25.08.050 Backfill.
25.08.060 Not Used.
25.08.070 Not Used.
25.08.080 Berm.
25.08.090 Breakwater.
25.08.100 Bulkhead.
25.08.110 Not Used.
25.08.120 Not Used.
25.08.130 Not Used.
25.08.140 Clearcut logging or clearcutting.
25.08.150 Department.
25.08.160 Development.
25.08.170 Director.
25.08.175 Dredging.
25.08.180 Earth material.
25.08.185 End Haul Construction.
25.08.190 Environment.
25.08.200 Excavation.
25.08.210 Float.
25.08.220 Floating home.
25.08.230 Not Used
25.08.240 Height.
25.08.250 Not Used.
25.08.260 Landfill.
25.08.270 Littoral drift.
25.08.280 Lot.
25.08.285 Manager.
25.08.290 Master program.
25.08.300 Natural hatchery.
25.08.310 Nonconforming use or development.
25.08.320 Nonwater related use.
25.08.330 Normal protective bulkhead common to single-family residences.
25.08.340 Open space, required.
25.08.350 Ordinary high water mark.
25.08.360 Person.
25.08.370 Pier.
25.08.380 Not Used.
25.08.390 Recreational development.
25.08.400 Redesignation.
25.08.410 Regeneration.
25.08.420 Residential development.
25.08.430 Riprap.
25.08.440 Sediment.

25.08.450 Selective cutting.
25.08.460 Shoreline management conditional use.

25.08.470 Shoreline management variance.
25.08.480 Shoreline protection.
25.08.490 Shorelines.
25.08.500 Shoreline setback.
25.08.510 Shorelines of statewide significance.
25.08.520 Shorelines of the state.
25.08.530 Side cast slopes.
25.08.540 Sign.
25.08.550 Slash.
25.08.560 Solid waste.
25.08.565 Stringer Bridge.
25.08.570 Substantial development.
25.08.580 Utilities.
25.08.590 Water dependent use.
25.08.600 Water related use.
25.08.604 Water transmission pipeline.
25.08.610 Wetlands.

25.08.010 Applicability of RCW and WAC definitions. Unless otherwise defined in this chapter, the definitions contained in title 21A (the zoning code), RCW Chapter 90.58 and WAC 173-14 shall apply.

25.08.015 Applicant. "Applicant" means a property owner or a public agency or public or private utility which owns a right-of-way or other easement or has been adjudicated the right to such an easement pursuant to RCW 8.12.090, or any person or entity designated or named in writing by the property or easement owner to be the applicant, in an application for a development proposal, permit or approval.

25.08.020 Access. A. Public Access. "Public access" means actual unobstructed access available to the general public from land to the ordinary high water mark or to the wetland directly abutting the ordinary high water mark.

B. Limited Public Access. "Limited public access" means:

1. Actual physical access from land to the ordinary high water mark or to the wetland directly abutting the ordinary high water mark, such access being limited to specific groups of people or to certain regularly prescribed times; or

2. Visual access available to the general public to the shoreline and adjacent waterbody, such access being specifically provided for in the development of the site.

25.08.030 Aquatic resource practices. "Aquatic resource practices" means the culture or farming of fin fish, shellfish, algae or other plants or animals in fresh or marine waters.

Excluded from the definition of aquatic resource practices are related commercial or industrial uses such as wholesale or retail sales; or final processing, packing, or freezing.

25.08.040 Average grade level. "Average grade level" means the average of the natural or existing topography at the center of all exterior walls of a building or structure to be placed on a site; provided, that in the case of

structures to be built over water, average grade level shall be the elevation of ordinary high water. 25.08.050 Backfill. "Backfill" means the placement of earth material behind a retaining wall or structure. 25.08.060 Backshore. Not Used.

25.08.070 Not Used.

25.08.080 Berm. "Berm" means one or several linear mounds of sand and gravel generally paralleling the shore at or landward of the ordinary high water mark which are normally stable because of material size or vegetation. 25.08.090 Breakwater. "Breakwater" means an off-shore structure either floating or not which may or may not be connected to the shore, such structure being designated to absorb and/or reflect back into the water body the energy of the waves. 25.08.100 Bulkhead. "Bulkhead" means a solid or open pile wall of rock, concrete, steel or timber or other materials or a combination of these materials erected generally parallel to and near the ordinary high water mark for the purpose of protecting adjacent wetlands and uplands from waves or currents. 25.08.110 Not Used.

25.08.120 Not Used.

25.08.130 Not Used.

25.08.140 Clearcut logging or clearcutting. "Clearcut logging" or "clearcutting" means the removal of the entire merchantable timber stand from an area. 25.08.150 Department. "Department" means the Department of Community Development.

25.08.160 Development. "Development" means any development as defined in RCW Chapter 90.58 as now or hereafter amended.

25.08.170 Director. "Director" means the Director of the Department of Community Development. 25.08.175 Dredging. "Dredging" is the removal, displacement, and/or disposal of unconsolidated earth material such as sand, silt, gravel, or other submerged materials, from the bottom of water bodies, ditches, or natural wetlands; maintenance dredging and/or support activities are included in this definition. 25.08.180 Earth material. "Earth material" is rock, natural soil or combination thereof.

25.08.185 End haul construction. "End haul construction" means the transportation of excess excavation material along the road surface to construct a road of balanced volumes of cut and fill. 25.08.190 Environment. "Environment" or "master program environment" or "shoreline environment" means the categories of shorelines of the state established by the City of Sammamish shoreline management master program to differentiate between areas whose features imply differing objectives regarding their use and future development. 25.08.200 Excavation. "Excavation" means the artificial movement of earth material.

25.08.210 Float. "Float" means a structure or device which is not a breakwater and which is moored, anchored, or otherwise secured in the waters of the City and which is not connected to the shoreline. 25.08.220 Floating home. "Floating home" means a houseboat, boat or building constructed on a float, used in whole or in part for human habitation as a dwelling unit, and which is moored, anchored, or otherwise secured in waters within the City of Sammamish. 25.08.230 Not Used.

25.08.240 Height. "Height" shall be measured from average grade level to the highest point of a structure; provided, that appurtenances such as television antennas and chimneys shall not be used in calculating height. (Ord. 3688 § 223, 1978).

25.08.250 Not Used.

25.08.260 Landfill. "Landfill" is the placement of earth material by

artificial means.

25.08.270 Littoral drift. "Littoral drift" means the natural movement of sediment along marine or lake shorelines by wave breaker action in response to prevailing winds.

25.08.280 Lot. "Lot" means a legal building site that is described by reference to a recorded plat, by metes and bounds, or by section, township and range which has direct legal access to a street or has access to a street over an easement approved by the county, provided that an owner of all or a contiguous portion of a plat which has been vacated consistent with the

provisions of state law shall have only one lot within the meaning of this title.

25.08.285 Not Used.

25.08.290 Master program. "Master program" means the comprehensive shoreline use plan for the City of Sammamish consisting of:

A. The use regulations and procedures contained in this title; and

B. The goals, objectives and policies of the City's shoreline management master program which are contained in a separate document and adopted by ordinance.

25.08.300 Natural hatchery. "Natural hatchery" means a facility for the rearing and/or holding of fish, the design of which is compatible with the natural environment and contains minimal development necessary for fish propagation.

25.08.310 Nonconforming use or development. "Nonconforming use or development" means those uses and structures that have been lawfully established or constructed prior to November 22, 1976, which no longer conform to the applicable regulations of the master program.

25.08.320 Nonwater related use. "Nonwater related use" means a use which is neither water dependent nor water related. 25.08.330 Normal protective bulkhead

common to single-family residences. "Normal protective bulkhead common to single-family residences" means a bulkhead constructed on a building site zoned to permit one single-family residence and containing one single-family residence.

25.08.340 Open space, required. "Required open space" means a portion of the area of a building site, which is required by this title, as set forth in different designations contained in this title, to be maintained as open area to be available for use by the persons specified in a development. Open spaces are required to be free and clear of buildings and structures and to remain open and unobstructed from the ground to the sky.

25.08.350 Ordinary high water mark. "Ordinary high water mark" means the ordinary high water mark as defined in RCW 90.58 as now or hereafter amended.

25.08.360 Person. "Person" means an individual, partnership, corporation, association, organization, cooperative, public or municipal corporation, or agency of any governmental unit however designated.

25.08.370 Pier. "Pier" or "dock" means a structure built in or over or floating upon the water extending from the shore, which may be used as a landing place for marine transport or for air or water craft or recreational activities.

25.08.380 Not Used.

25.08.390 Recreational development. "Recreational development" means a private or public development operated and devoted to facilities and equipment for recreational purposes, including but not limited to swimming pools, tennis courts, playgrounds, picnic areas, campgrounds, resorts and other similar uses whether the use of such area is limited to those paying a fee or free to the public. 25.08.400 Redesignation. "Redesignation" means a change in the shoreline environment designation by the procedures provided in Chapter 25.32 of this title.

25.08.410 Regeneration. "Regeneration" means the renewal of a tree crop, whether by natural or artificial means. (

25.08.420 Residential development. A. Residential Development, Single-family. "Single-family residential development" or "single-family development" means development consisting of one or more one-family dwellings.

B. Residential Development, Multifamily. "Multifamily residential development" or "multifamily development" means development consisting of one or more two-family dwellings and/or multiple dwellings.

25.08.430 Riprap. "Riprap" means hard angular quarry rock used for revetments or other bank stabilization projects. (Ord. 3688 § 241, 1978).

25.08.440 Sediment. "Sediment" is material settled from suspension in a liquid medium. 25.08.450 Selective cutting. "Selective cutting" means the removal of certain trees selected for cutting so as not to interfere with the growth and development of the remaining trees.

25.08.460 Shoreline management conditional use. "Shoreline management conditional use" or "shoreline conditional use" means a use specifically designated as a shoreline conditional use in the shoreline management master program.

25.08.470 Shoreline management variance. "Shoreline management variance" means an adjustment in the application of the regulations of the shoreline management master program consistent with WAC 173-14.

25.08.480 Shoreline protection. "Shoreline protection" means a structure or device, including but not limited to breakwaters, bulkheads, jetties, groins and riprap, which is placed so as to prevent erosion or to alter the normal currents, wave actions or other natural forces or actions of a waterbody.

25.08.490 Shorelines. "Shorelines" means all of the water areas within the City of Sammamish, including reservoirs, and their associated wetlands together with the lands underlying them; except:

A. Shorelines on segments of streams upstream of a point where the mean annual flow is twenty cubic feet per second or less and the wetlands associated with such upstream segments;

B. Shorelines on lakes less than twenty acres in size and wetlands

associated with such lakes. 25.08.500 Shoreline setback. "Shoreline setback" means a required open space measured horizontally upland from and perpendicular to the ordinary high water mark, or a required open space along shorelines which are steep slopes, slide areas or floodplains. 25.08.510 Shorelines of statewide significance. "Shorelines of statewide significance" means those shorelines described in RCW 90.58.030(2)(e) which are within the City of Sammamish.

25.08.520 Shorelines of the state. "Shorelines of the state" are total of all "shorelines" and "shorelines of statewide significance" within the City.

25.08.530 Side cast slopes. "Side cast slopes" means slopes of landfill compacted by natural settling over time.

25.08.540 Sign. "Sign" means any letters, figures, design, symbol, light, structure, billboard, trademark or device intended or used to attract attention to any activity, service, place, subject, person, firm, corporation, public performance, article, machine, merchandise or thing. Excluded from definition and regulation by this title are official traffic signs or signals, official public notices, signs required by law, warning signs, the flag of a government or noncommercial institution such as schools and temporary signs worn or carried by people. 25.08.550 Slash. "Slash" means the branches, bark, tops, chunks, cull logs, uprooted stumps and broken or uprooted trees which remain on the ground after logging. 25.08.560 Solid waste. "Solid waste" means all putrescible and nonputrescible solid and semisolid wastes including but not limited to garbage, rubbish, ashes, industrial wastes, swill, demolition and construction wastes, abandoned vehicles or parts thereof and discarded commodities. 25.08.565 Stringer bridge. A "stringer bridge" is a bridge constructed of lengths of timber supporting a number of smaller transverse members. (

25.08.570 Substantial development. "Substantial development" means any development which requires a shoreline management substantial development permit, as defined in RCW 90.58.030(3)(e) as now or hereafter amended. (

25.08.580 Utilities. "Utilities" are all lines and facilities related to the distribution, collection, transmission or disposal of water, storm and sanitary sewage, oil, gas, power or refuse25.08.590 Water dependent use. "Water dependent use" or "water dependent development" means a principal use which can only exist where the landwater interface provides biological or physical conditions necessary for the use.

25.08.600 Water related use. "Water related use" or "water related development" means a principal use which is not intrinsically dependent on a location abutting the ordinary high water mark but which:

A. Promotes the public's enjoyment of or access to the water; or

B. Gains a cost savings or revenue-differentiating advantage, which is not associated with land rents or costs, from being located within the shorelines of the state that could not be obtained at an upland location;

such uses include but are not limited to residential development, boat sales or restaurants.

25.08.604 Water transmission pipeline. "Water transmission pipeline" means a facility having as its primary purpose the transmission of water by a municipal purveyor for sale for domestic, commercial, and industrial use.

25.08.610 Wetlands. "Wetland," "associated wetlands" or "wetland areas" means those lands extending landward for two hundred feet in all directions as measured on a horizontal plane from the ordinary high water mark; and all marshes, bogs, swamps, floodways, river deltas, and the entire one-hundred-year floodplains associated with the streams, lakes and tidal waters which are subject to the provisions of this title; the same to be designated as to location by the Washington State Department of Ecology. Floodplains shall not include those areas which are effectively protected from the one-hundred-year flood by authorized flood control devices or other legal improvements.

Chapter 25.12
ENVIRONMENT DESIGNATIONS

Sections:

25.12.010 Purpose.
25.12.020 Names of environment designations.
25.12.030 Limits of environment designations.
25.12.040 Establishment of designations.
25.12.050 Location of boundaries.

25.12.010 Purpose. The purpose of these designations is to differentiate between areas whose geographical, hydrological, topographical or other features imply differing objectives regarding the use and future development of the shorelines of the state.

Each environment designation represents a particular emphasis in the type of uses and the extent of development which should occur within it. The environmental designation system is designed to encourage uses in each environment which enhance or are compatible with the character of the environment while at the same time requiring reasonable standards and restrictions on development so that the character of the environment is not adversely impacted. 25.12.020 Names of environment designations. In order to accomplish the purpose of this title, environmental designations have been established to be known as follows:

A. Not Used.
B. Conservancy environment;
C. Rural environment;

D. Urban environment.

25.12.030 Limits of environment designations. Each environment designation shall consist of:

A. The entire water body from its centerline or point, including all water below the surface;

B. The associated wetlands, provided, in those cases where a floodplain or other severe biophysical limitation to development does not cover the entire associated wetland, one environment designation may be placed on the floodplain portion of the wetland or the portion of the wetland with severe biophysical limitations and another on the remaining portion of the wetland;

C. In shoreline areas where severe biophysical constraints such as flood plains, steep slopes, slide hazard areas and/or marshes, bogs or swamps do not cover the entire associated wetland, proposed development in the remaining area may be permitted consistent with the character of the surrounding land use, the physical capabilities of the associated wetland and applicable county land use plans and policies.

25.12.040 Establishment of designations. A. The written descriptions of the boundaries of the shoreline environment designations as adopted by ordinance in the possession of the department shall constitute the official legal descriptions of the boundaries of those environment designations.

B. The official maps prepared pursuant to WAC 173-22 in the possession of the Department shall constitute the official descriptions of the limits of all wetlands in the City of Sammamish as defined by RCW 90.58.030 and Chapter 15.08 of this title.

C. The Department may, from time to time as new or improved information becomes available, modify the official maps described in subsection B. of this section consistent with state guidelines to more accurately represent or clarify or interpret the true limits of the wetlands defined herein. 25.12.050 Location of boundaries. A. Boundaries indicated as following streets, highways, roads and bridges shall be deemed to follow the centerline of such facilities unless otherwise specified.

B. Boundaries indicated as following railroad lines and transmission lines shall be deemed to follow the centerline of such rights-of-way or easements unless otherwise specified.

C. Where different environmental designations have been given to a tributary and the main stream at the point of confluence, the environmental designation given to the main stream shall extend for a distance of two hundred feet up the tributary.

D. In case of uncertainty as to a wetland or environment boundary, the Director shall determine its exact location pursuant to the criteria of WAC 173-22-055 and RCW 90.58.030 and the provisions of this chapter.

Chapter 25.16
URBAN ENVIRONMENT

Sections:

25.16.010 Purpose.
25.16.020 Designation criteria.
25.16.030 General requirements.
25.16.040 Not Used.
25.16.050 Not Used.

25.16.060 Forest management practices.
25.16.070 Commercial development.
25.16.080 Signs.
25.16.090 Residential development-Multifamily.
25.16.100 Residential development-Single-family.
25.16.110 Residential development-Accessory structures.
25.16.120 Residential development-Piers, moorage, or launching facilities-Conditions.
25.16.130 Not Used.
25.16.140 Residential development-Piers, moorage, and launching facilities-Accessory to single-family residence.
25.16.150 Subdivisions.
25.16.160 Utilities.
25.16.170 Not Used.
25.16.180 Shoreline protection.
25.16.190 Excavation, dredging and filling.
25.16.200 Recreation.

25.16.010 Purpose. The purpose of designating the urban environment is to ensure optimum utilization of the shorelines of the state within urbanized areas by permitting intensive use and by managing development so that it enhances and maintains the shorelines of the state for a multiplicity of urban uses. The urban environment is designed to reflect a policy of increasing utilization and efficiency of urban areas, to promote a more intense level of use through redevelopment of areas now under-utilized and to encourage multiple use of the shorelines of the state if the major use is water dependent or water related while at the same time safeguarding the quality of the environment.

25.16.020 Designation criteria. Designation criteria for the urban environment shall be:

A. Shorelines of the state used or designated for high intensity commercial, industrial, or recreational use;

B. Shorelines of the state of lower intensity use, where surrounding land use is urban and urban services are available;

C. Shorelines of the state used or designated for multifamily residential development;

D. Shorelines of the state used for port activities;

E. Shorelines of the state developed for residential purposes and where surrounding land use is urban and urban services are available;

F. Shorelines of the state to be designated urban environment shall not have biophysical limitations to development such as floodplains, steep slopes, slide hazard areas and/or marshes, bogs or swamps.

25.16.030 General requirements. A. Nonwater related development and residential development shall not be permitted waterward of the ordinary high water mark.

B. Except in those cases when the height requirements of the underlying zones are more restrictive, no structure shall exceed a height of thirty-five feet above average grade level. This requirement may be modified if the view of a substantial number of residences will not be obstructed, if permitted by the applicable provisions of the underlying zoning, and if the proposed development is agricultural, water related or water dependent.

C. All development shall be required to comply with ISDC chapter 9.04 to control runoff and to provide adequate surface water and erosion and sediment control during the construction period.

D. Development shall maintain the first fifty feet of property abutting a natural environment as required open space.

E. Parking facilities except parking facilities associated with detached single-family and agricultural development shall conform to the following minimum conditions:

1. Parking areas serving a water related or a nonwater related use must be located beneath or upland of the development which the parking area serves.

2. Any outdoor parking area perimeter, excluding entrances and exits, must be maintained as a planting area with a minimum width of five feet.

3. One live tree with a minimum height of four feet shall be required for each thirty linear feet of planting area.

4. One live shrub of one-gallon container size or larger for each sixty linear inches of planting area shall be required.

5. Additional perimeter and interior landscaping of parking areas may be required, at the discretion of the director, when it is necessary to screen parking areas or when large parking areas are proposed.

F. Water quality treatment in compliance with ISDC chapter 9.04 shall be required where stormwater runoff would degrade or add to the pollution of recipient waters or adjacent properties.

G.The regulations of this chapter have been categorized in a number of sections; regardless of the categorization of the various regulations, all development must comply with all applicable regulations.

H.Development proposed in shorelines of the state shall maintain setbacks, provide easements or otherwise develop the site to permit a trail to be constructed or public access to continue where:

1. There is a proposed trail; or

2. Part of the site is presently being used and has historically been used for public access.

I. Along shorelines of the state on Lake Sammamish, no building shall be placed on lands below thirty-two and one-half feet mean sea level.

J. The regulations of this chapter are in addition to other adopted ordinances and rules. Where conflicts exist, that which provides more protection to sensitive area shall apply; except that water dependent uses shall adhere to the applicable regulations and policies of the City's Shoreline Master Program.

25.16.040 Not Used.

25.16.050 Not Used.

25.16.060 Forest management practices. Forest management practices are not permitted in the urban environment. (Ord. 3688 § 406, 1978).

25.16.070 Commercial development. Commercial development may be permitted in the urban environment subject to the general requirements (Section 25.16.030) of this chapter, and provided:

A.The commercial activity is permitted in the underlying zone classification.

B. Not Used.

C. Water dependent commercial development shall not be required to maintain a shoreline setback.

D. Water related commercial development shall maintain a shoreline setback of either twenty feet from the ordinary high water mark or ten feet from the edge of the floodway, whichever is greater. This shoreline setback may be reduced either to ten feet from the ordinary high water mark or to the edge of the floodway, whichever is greater, if the water related development provides limited public access or public access.

E. Nonwater related commercial development shall maintain a shoreline setback of either fifty feet from the ordinary high water mark or twenty feet from the edge of the floodway, whichever is greater. This shoreline setback may be reduced either to twenty feet from the ordinary high water mark or to ten feet from the edge of the floodway, whichever is greater, if the nonwater related development provides limited public access. This shoreline setback may be reduced either to ten feet from the ordinary high water mark or to the edge of the floodway, whichever is greater, if the nonwater related development provides public access.

F. Piers, moorages, floats and launching facilities may be permitted accessory to commercial development, provided:

1. The structure will serve a water dependent or water related use;
2. The structure does not constitute a hazard to navigation.

25.16.080 Signs. Signs may be permitted in the urban environment subject to the provisions of the underlying zoning, provided:

A. No sign which is not constructed parallel to and flush against the side of a building shall be permitted which is more than seventy-two inches in height as measured from the average grade level.

B. Signs painted upon or constructed parallel to and flush against the side of a building shall not extend beyond the wall or above the roof line against which they are constructed.

C. Signs shall be stationary, nonblinking and nonrevolving.

D. Signs shall have no auxiliary projections or attachments.

E. Signs shall not be erected nor maintained upon trees, or drawn or painted upon rocks or other natural features.

F. Artificial lighting of signs shall be directed away from adjacent properties and the water.

G. Signs waterward of the ordinary high water mark shall be permitted only to the extent necessary for the operation of a permitted overwater development provided no such sign shall be larger than five square feet. 25.16.090 Residential development - Multifamily. Multifamily residential development may be permitted in the urban environment subject to the general requirements of ISDCISDC 25.16.030, provided:

A. Multifamily development is permitted in the underlying zone;

B. Multifamily residential development shall not be permitted waterward of the ordinary high water mark;

C. Setbacks. Multifamily residential development shall maintain a minimum setback of fifty feet from the ordinary high water mark, except that:

1. If the minimum setback from the ordinary high water mark of a river or stream falls within the floodway, the development shall be required to locate past the upland edge of the floodway,

2. If development is proposed on shorelines, including one or more sensitive areas, as defined in ISDCISDC21.06, such development shall be done in accordance with regulations and procedures set forth in ISDCISDC 21A.24.

25.16.100 Residential development - Single-family. Single-family residential development may be permitted in the urban environment subject to the general requirements of ISDCISDC 25.16.030, provided:

A. Single-family development is permitted in the underlying zone classification;

B. Single-family development, including floating homes, shall not be permitted waterward of the ordinary high water mark;

C. Setbacks. Single-family residential development shall maintain a minimum setback of twenty feet from the ordinary high water mark, except that:

1. If the minimum setback from the ordinary high water mark of a river or stream falls within the floodway, the development shall be required to locate past the upland edge of the floodway,

2. If development is proposed on shorelines, including one or more sensitive areas, as defined in ISDCISDC 21A.06, such development shall be done in accordance with regulations and procedures set forth in ISDC 21A.24,

D. A farmhouse permitted under the reasonable use exception provisions of ISDC 21A.24 shall be exempt from the setback requirements of this section

25.16.110 Residential development - Accessory structures. Accessory structures to the residence may be placed within the required shoreline setback, provided:

A. No accessory structure, except swimming pools, shall cover more than one hundred fifty square feet;

B. No accessory structure shall obstruct the view of the neighboring properties;

C. No accessory structure shall exceed eight feet in height.

25.16.120 Residential development - Piers, moorage, or launching facilities - Conditions. Any pier, moorage, float or launching facility authorized by ISDC 25.16.090 through 25.16.140 shall be subject to the following conditions:

A. No structure may be located nor extend further waterward of the ordinary high water mark than one-fourth the total distance from the shoreline associated with the structure to the opposite shoreline. This total distance shall be measured from the point where the authorized structure abuts the ordinary high water mark to the nearest opposite high water mark as measured along a straight line; provided, when the structure does not abut the ordinary high water mark, the distance from one ordinary high water mark to the opposite ordinary high water mark shall be measured along the shortest straight line passing through the center of that structure which commences from the property associated with such a structure.

B. No covered pier, covered moorage, covered float, or other covered structure is permitted waterward of the ordinary high water mark, except that submerged, free-standing mechanical boat lifts associated with single-family residential piers and recreational watercraft may be covered with a canopy, provided:

1. No canopy shall be more than 25 feet in length or wider than 15 feet;

2. No portion of the canopy shall exceed a height of 10 feet above the Ordinary High Water Line (OHWL);

3. The canopy shall at no time have any side partly or wholly enclosed;

4. The highest portion of the canopy shall be located below the topographical grade of existing homes on surrounding properties;

5. Canopies shall be made out of canvas or other such non-toxic materials;

6. Canopies shall be of a solid color and should be of a shade which is non-obtrusive;

7. The canopy shall be included in the square footage calculations for piers, as enumerated in ISDC 25.16.140E; and

8. Only one boat lift canopy per single-family residence shall be allowed.

C. No pier, moorage, float, or overwater structure or device shall be located closer than fifteen feet from the side property line extended, except that such structures may abut property lines for the common use of adjacent property owners when mutually agreed to by the property owners in a contract recorded with the King County division of records and elections, a copy of which must accompany an application for a building

permit or a shoreline permit; such joint use piers may be permitted up to twice the surface area allowed by this title.

D. All piers, moorages, floats or other such structures shall float at all times on the surface of the water or shall be of open pile construction, provided no portion of the structure shall, during the course of the normal fluctuations

of the elevation of the water body, protrude more than five feet above the surface of the water, except as provided in subsection B2.

E. No pier, including finger pier, moorage, float, or overwater structure or device shall be wider than fifty percent of the lot with which it is associated.

F. No dwelling unit may be constructed on a pier.

25.16.130 Residential development - Piers, moorage, or launching facilities - Accessory to multifamily development. Piers, moorages, floats and launching facilities may be permitted accessory to multifamily developments, or as common use facilities associated with a subdivision or planned unit development provided:

A. No more than one pier for each one hundred feet of shorelines of the state associated with the multifamily development, subdivision, short subdivision or planned unit development is permitted.

B. The total number of moorage spaces shall be limited to one moorage space for every two dwelling units in the multifamily development, subdivision or planned unit development provided no more than twenty moorage spaces shall be permitted.

C. The maximum waterward intrusion of any portion of any pier shall be eighty feet, provided this intrusion may be increased four feet for each additional moorage space over ten moorage spaces to a maximum of one hundred twenty feet.

D. The minimum width of each pier shall be five feet.

E. Moorage piles not constructed in conjunction with a pier are limited by the following conditions:

1. All piles shall be placed so as not to constitute a hazard to navigation.

2. No pile shall be placed more than eighty feet waterward of the ordinary high water mark.

3. All piles shall be placed in a water depth not to exceed thirteen feet below the ordinary high water mark.

F. Launching ramps and lift stations are limited by the following conditions:

1. No portion of a launching ramp or lift station shall be placed more than sixty feet waterward of the ordinary high water mark.

2. Launching rails or ramps shall be anchored to the ground through the use of tie-type construction. Asphalt or concrete ramps or other ramps which solidly cover the water body bottom are not permitted.

3. No more than two common use launching ramps for each one hundred feet of shorelines of the state associated with the multifamily development, short subdivision, subdivision or planned unit development permitted.

G. Common use floats are limited by the following conditions:

1. One float per multifamily development, short subdivision, subdivision or planned unit development is permitted.

2. No portion of a float shall be placed more than eighty feet waterward of the ordinary high water mark.

3. No float shall have more than one hundred fifty square feet of surface area.

H. Excavated moorage slips shall not be permitted accessory to multifamily development or as common use facilities accessory to subdivisions, short subdivisions, or planned unit developments.

25.16.140 Residential development - Piers, moorage, or launching facilities - Accessory to single-family residence. Piers, moorages, floats or launching facilities may be permitted accessory to a single-family residence, provided:

A. Private, single residence piers for the sole use of the property owner shall not be considered an outright use on City of Sammamish shorelines. A pier may be allowed when the applicant has demonstrated a need for moorage and that the following alternatives have been investigated and are not available or feasible:

1. Commercial or marina moorage;
2. Floating moorage buoys;
3. Joint use moorage pier.

B. No more than one pier for each residence is permitted.

C. On lots with less than fifty feet of waterfront only joint use piers shall be permitted except when both lots abutting the subject lot have legally established piers then the lot with less than fifty feet of waterfront may be permitted an individual pier.

D. The maximum waterward intrusion of any portion of any pier shall be eighty feet, or the point where the water depth is thirteen feet below the ordinary high water mark, whichever is reached first.

E. The total surface area of piers, moorages, floats and/or launching facilities, or any combination thereof, shall not exceed six hundred square feet, provided that, no float shall have more than one hundred fifty square feet of surface area.

F. Moorage piles are limited by the following conditions:

1. All piles shall be placed so as to not constitute a hazard to navigation.
2. No pile shall be placed more than eighty feet waterward of the ordinary high water mark.
3. All moorage piles shall be placed in a water depth not to exceed thirteen feet below the ordinary high water mark.
4. No more than two moorage piles per residence are permitted.

G. Launching ramps and lift stations are limited by the following conditions:

1. No portion of a launching ramp or lift station shall be placed more than sixty feet waterward of the ordinary high water mark.
2. All portions of a launching ramp or lift station shall be placed at a depth not to exceed eight feet below the ordinary high water mark.
3. Launching rails shall be anchored to the ground with the use of tie-type construction. Asphalt or concrete ramps or other ramps which solidly cover the water-body bottom are not permitted.
4. No more than one launching rail per single-family residence is permitted.

H. Floats are limited by the following conditions:

1. One float per residence is permitted.

2. No portion of a float shall be placed more than eighty feet waterward of the ordinary high water mark.

3. Retrieval lines shall not float at or near the surface of the water.

4. No float shall have more than one hundred fifty square feet of surface area.

I. Excavated moorage slips are limited by the following conditions:

1. One moorage slip per residence is permitted.

2. No moorage slip shall be excavated more than six feet below the ordinary high water mark.

3. No moorage slip shall have more than five hundred twenty-five square feet of surface area as measured from the tops of the banks and the ordinary high water mark.

J. A residence may have either a pier or an excavated moorage slip, but not both.

K. Not Used.

25.16.150 Subdivisions. A. Any existing lot that does not comply with the density and dimensions standards of ISDC 21A.12 and located wholly or partially within the shorelines of the state shall be subject to the following provisions:

1. If the adjoining property is not under the same ownership as such lot, then the lot shall be considered a separate building site.

2. If the adjoining property is under the same ownership as such lot, then the lot shall not be considered a separate building site until the lot is combined with adjoining property under the same ownership in such a way as to comply with the density and dimensions standards of ISDC 21A.12.

B. Submerged land within the boundaries of any waterfront parcel shall not be used to compute lot area, lot dimensions, yards, open space or other similar required conditions of land subdivision or development, except, where specifically authorized by ordinance, such lands may be used in area computations as an incentive to encourage common open space waterfront areas.

C. All newly created lots wholly or partially within the shoreline shall be of uniform size and dimension, whenever possible.

25.16.160 Utilities. Utility facilities may be permitted in the urban environment subject to the general requirements section (Section 25.16.030) of this chapter, provided:

A. Utility and transmission facilities shall:

1. Avoid disturbance of unique and fragile areas;

2. Avoid disturbance of wildlife spawning, nesting and rearing areas;

3. Overhead utility facilities shall not be permitted in public parks, monuments, scenic recreation or historic areas.

B. Utility distribution and transmission facilities shall be designed so as to:

1. Minimize visual impact;
2. Harmonize with or enhance the surroundings;
3. Not create a need for shoreline protection;
4. Utilize to the greatest extent possible natural screening.

C. The construction and maintenance of utility facilities shall be done in such a way so as to:

1. Maximize the preservation of natural beauty and the conservation of resources;
2. Minimize scarring of the landscape;
3. Minimize siltation and erosion;
4. Protect trees, shrubs, grasses, natural features and topsoil from drainage;
5. Avoid disruption of critical aquatic and wildlife stages.

D. Rehabilitation of areas disturbed by the construction and/or maintenance of utility facilities shall:

1. Be accomplished as rapidly as possible to minimize soil erosion and to maintain plant and wildlife habitats;
2. Utilize plantings compatible with the native vegetation.

E. Solid waste transfer stations shall not be permitted within the shorelines of the state. (Ord. 3688 § 411, 1978).

25.16.170

Not Used.

25.16.180 Shoreline protection. Shoreline protection may be permitted in the urban environment, provided:

A. Shoreline protection to replace existing shoreline protection shall be placed along the same alignment as the shoreline protection it is replacing, but may be placed waterward directly abutting the old structure in cases where removal of the old structure would result in construction problems;

B. On lots where the abutting lots on both sides have legally established bulkheads, a bulkhead may be installed no further waterward than the bulkheads on the abutting lots, provided that the horizontal distance between existing bulkheads on adjoining lots does not exceed one-hundred feet. The Director may, upon review, permit a bulkhead to connect two directly adjoining bulkheads, for a distance up to one hundred fifty feet.

C. In order for a proposed bulkhead to qualify for the RCW 90.58.030(3) (e) (iii) exemption from the shoreline permit requirements and to insure that such bulkheads will be consistent with this program as required by RCW 90.58.141(1), the Department shall review the proposed design as it relates to local physical conditions and the City's shoreline master program and must find that:

1. Erosion from waves or currents is imminently threatening a legally established residence or one or more substantial accessory structures, and

2. The proposed bulkhead is more consistent with the City's shoreline master program in protecting the site and adjoining shorelines than feasible, non-structural alternatives such as slope drainage systems, vegetative growth stabilization, gravel berms

and beach nourishment, are not feasible or will not adequately protect a legally established residence or substantial accessory structure, and

3. The proposed bulkhead is located landward of the ordinary high water mark or it connects to adjacent, legally established bulkheads as in subsection B. above, and

4. The maximum height of the proposed bulkhead is no more than four feet in height on lakes;

D. Shoreline protection shall not be considered an outright permitted use and shall be permitted only when it has been demonstrated that shoreline protection is necessary for the protection of existing legally established structures and public improvements.

E. Shoreline protection shall not have adverse impact on the property of others.

F. Shoreline protection shall not be used to create new lands. G. Shoreline protection shall not significantly interfere with normal surface and/or subsurface drainage into the water body.

H. Automobile bodies or other junk or waste material which may release undesirable material shall not be used for shoreline protection.

I. Shoreline protection shall be designed so as not to constitute a hazard to navigation and to not substantially interfere with visual access to the water.

J. Shoreline protection shall be designed so as not to create a need for shoreline protection elsewhere.

K. Not Used.

L. Bulkheads must be approved by the Washington State Department of Fisheries;

M. Bulkheads shall be constructed using an approved filter cloth or other suitable means to allow passage of surface and groundwater without internal erosion of fine material;

N. Not Used.

25.16.190 Excavation, dredging and filling. Excavation, dredging and filling may be permitted in the urban environment, only as part of an approved overall development plan not as an independent activity provided:

A. Any fill or excavation regardless of size, shall be subject to the provisions of ISDC 16.82.100;

B. Landfill may be permitted below the ordinary high water mark only when necessary for the operation of a water dependent or water related use, or when necessary to mitigate conditions which endanger public safety;

C. Landfill or excavations shall be permitted only when technical information demonstrates water circulation, littoral drift, aquatic life and water quality will not be substantially impaired;

D. Landfill or disposal of dredged material shall be prohibited within the floodway;

E. Wetlands such as marshes, swamps, and bogs shall not be disturbed or altered through excavation, filling, dredging, or disposal of dredged material unless the manager determines that either:

1. The wetland does not serve any of the valuable functions of wetlands identified in ISDC 20.12.080 and U.S. Army Corps of Engineers 33 CFR 320.4(b), including but not limited to wildlife habitat and natural drainage functions, or

2. The proposed development would preserve or enhance the wildlife habitat, natural drainage, and/or other valuable functions of wetlands as discussed in ISDC 20.12.080 or U.S. Army Corps of Engineers 33 CFR 320.4(b) and would be consistent with the purposes of this Title;

F. Not Used.

G. Excavations on beaches shall include precautions to prevent the migration of fine grain sediments, disturbed by the excavation, onto adjacent beach areas and excavations on

beaches shall be backfilled promptly using material of similar composition and similar or more coarse grain size;

H. No refuse disposal sites, solid waste disposal sites, or sanitary fills of putrescible or non-putrescible material shall be permitted within the shorelines of the state;

I. Excavation or dredging below the ordinary high water mark shall be permitted only:

1. When necessary for the operation of a water dependent or water related use, or

2. When necessary to mitigate conditions which endanger public safety or fisheries resources, or

3. As part of and necessary to roadside ditch maintenance that is performed consistent with best management practices promulgated through administrative rules pursuant to the sensitive areas provisions of ISDC chapter 21A.24 and if:

a. the maintenance does not involve any expansion of the ditch beyond its previously excavated size. This limitation shall not restrict the county's ability to require mitigation, pursuant to ISDC chapter 21A.24, or other applicable laws;

b. the ditch was not constructed or created in violation of law;

c. the maintenance is accomplished with the least amount of disturbance to the stream or ditch as possible;

d. the maintenance occurs during the summer low flow period and is timed to avoid disturbance to the stream or ditch during periods critical to salmonids; and

e. the maintenance complies with standards designed to protect salmonids and salmonid habitat, consistent with ISDC chapter 21A.24; provided, that this paragraph shall not be construed to permit the mining or quarrying of any substance below the ordinary high water mark;

J. Disposal of dredged material shall be done only in approved deep water disposal sites or approved contain upland disposal sites;

K. Stockpiling of dredged material in or under water is prohibited;

L. Maintenance dredging not requiring a shoreline permit(s) shall conform to the requirements of this section;

M. Dredging shall be timed so that it does not interfere with aquatic life;

N. The county may impose reasonable conditions on dredging or disposal operations including but not limited to working seasons and provisions of buffer strips, including retention or replacement of existing vegetation, dikes, and settling basins to protect the public safety and shore users' lawful interests from unnecessary adverse impact;

O. In order to insure that operations involving dredged material disposal and maintenance dredging are consistent with this program as required by RCW 90.58.140(1), no dredging may commence on shorelines without the responsible person having first obtained either a substantial development permit or a statement of exemption; PROVIDED, that no statement of exemption or shoreline permit is required for emergency dredging needed to protect property from imminent damage by the elements;

P. Operation and maintenance of any existing system of ditches, canals, or drains are exempt from the shoreline permit requirement.

25.16.200 Recreation. Recreational development may be permitted in the urban environment subject to the general requirements (Section 25.16.030) of this chapter, and provided:

A. The recreational development is permitted in the underlying zone.

B. Swimming areas shall be separated from boat launch areas and marinas.

C. The development of underwater sites for sport diving shall not:

1. Take place at depths of greater than eighty feet;

2. Constitute a navigational hazard;

3. Be located in areas where the normal waterborne traffic would constitute a hazard to those people who may use such a site.

D. The construction of swimming facilities, piers, moorages, floats and launching facilities below the ordinary high water mark shall be governed by the regulations relating to pier and moorage construction in the commercial development section (Section 25.16.070) of this chapter.

E. Public boat launching facilities or marinas may be developed, provided:

1. The traffic generated by such a facility can be safely and conveniently handled by the streets serving the proposed facility;

2. Not Used.

F. Upland facilities constructed in conjunction with a recreational development shall be setback and/or sited to avoid contamination of the shorelines of the state.

G. All service facilities within and associated with marinas shall have provisions to prevent and control contaminants from entering the water. Provisions shall be available for cleanup of accidental spills of contaminants.

H. Not Used.

I. Public pedestrian and bicycle pathways shall be permitted adjacent to water bodies.

J. Public contact with unique and fragile areas shall be permitted where it is possible without destroying the natural character of the area.

K. Water viewing, nature study, recording and viewing shall be accommodated by space, platforms, benches or shelter, consistent with public safety and security.

Chapter 25.24
CONSERVANCY ENVIRONMENT

Sections:

25.24.010 Purpose.
25.24.020 Designation criteria.
25.24.030 General requirements.
25.24.040 Agricultural practices.
25.24.050 Aquatic resource practices.
25.24.060 Forest management practices.
25.24.070 Commercial development.
25.24.080 Signs.
25.24.090 Residential development.
25.24.100 Subdivisions.
25.24.110 Utilities.
25.24.120 Industrial development.
25.24.130 Shoreline protection.
25.24.140 Excavation, dredging and filling.
25.24.150 Recreation.

25.24.010 Purpose. Conservancy areas are intended to maintain their existing character. This designation is designed to protect, conserve, and manage existing natural resources and valuable historic and cultural areas. The preferred uses are those nonconsumptive of the physical and biological resources of the area.

25.24.020 Designation criteria. Designation criteria for the conservancy environment shall be:

A. Shoreline areas, regardless of the underlying zoning which has biophysical limitations to development which include but are not limited to:

1. Shoreline areas which are one hundred-year floodplains and areas which have flooding potential,
2. Shoreline areas with soils that have poor drainage,
3. Shoreline areas subject to severe erosion,
4. Shoreline areas with unstable banks,
5. Shoreline areas subject to slide hazard;

B. Not Used.

C. Shoreline areas which are free from extensive development;

D. Shoreline historic areas;

E. Shoreline area of high scenic value;

F. Not Used.

G. Not Used.

H. Areas which play an important part in maintaining the ecological balance of the region such as:

1. Areas rich in quality and quantity of life forms,
2. Areas important to the maintenance of the natural quality and flow of the water,
3. Marshes, bogs and swamps,
4. Not Used.
5. Not used.
6. Not Used.
7. Not Used.

25.24.030 General requirements. A. Nonwater related, water related and residential development shall not be permitted waterward of the ordinary high water mark.

B. Except in those cases when the height requirements of the underlying zone are more restrictive, no structure may exceed a height of thirty-five feet above average grade level.

C. All development shall be required to comply with K.C.C. chapter 9.04 to control runoff and to provide adequate surface water and erosion and sediment control during the construction period.

D. Development shall maintain the first fifty feet of property abutting a natural environment as required open space.

E. Parking facilities except parking facilities associated with detached single-family and agricultural development shall maintain a shoreline setback of one hundred feet from the ordinary high water mark and retain existing vegetation or be planted in conformance with the landscape standards enumerated in the general requirements (ISDC 25.16.030) of the urban environment.

F. Water quality treatment in compliance with ISDC chapter 9.04 shall be required where stormwater runoff would materially degrade or add to the pollution of recipient waters or adjacent properties.

G. The regulations of this chapter have been categorized in a number of sections; regardless of the categorization of the various regulations, all development must comply with all applicable regulations.

H. Development proposed in shorelines of the state shall maintain setbacks, provide easements or otherwise develop the site to permit a trail to be constructed or public access to continue where:

1. There is a proposed trail; or

2. Part of the site is presently being used and has historically been used for public access.

I. Along shorelines of the state on Lake Sammamish, no building shall be placed on lands below thirty-two and one-half feet mean sea level.

J. The regulations of this chapter are in addition to other adopted ordinances and rules. Where conflicts exist, that which provides more protection to a sensitive area shall apply; provided except that water dependent uses shall adhere to the applicable regulations and policies of the City's Shoreline Master Program and shall comply with other ordinances and rules to the greatest extent feasible.

25.24.040 Not Used.

25.24.050 Not Used.

25.24.060 Forest management practices. Forest management practices may be permitted in the conservancy environment subject to the forest management practices provisions (Section 25.20.060) of the rural environment.

25.24.070 Commercial development. Commercial development shall not be permitted in the conservancy environment.

25.24.080 Signs. Signs, except educational signs of not more than twenty-five square feet erected within recreational developments and signs as permitted for single detached residences by ISDC 21A.20.080, are not permitted in the conservancy environment.

25.24.090 Residential development. A. Multifamily development is prohibited in the conservancy environment, except that the clustering of dwelling units into multifamily development may be permitted to avoid development of sensitive or hazardous areas such as marshes, swamps, bogs, flood plains, or steep or unstable slopes; provided, that the density standards enumerated in ISDC 25.24.100 shall not be exceeded. This provision is

not intended to promote intensive development in the conservancy environment. The intent of this provision is to permit development which would have less adverse impact on sensitive or hazardous areas than traditional lot by lot development.

B. Single-family residential development may be permitted in the conservancy environment subject to the general requirements of this chapter and the single-family provisions ISDC 25.16.090 through 25.16.140 of the urban environment. Single-family residential development shall maintain a minimum setback of fifty feet from the ordinary high water mark, except that:

1. If the minimum setback from the ordinary high water mark of a river or stream falls within the floodway, the development shall be required to be located past the upland edge of the floodway,

2. If development is proposed on shorelines, including one or more sensitive areas, as defined in ISDC 21A.06, such development shall be done in accordance with regulations and procedures set forth in ISDC 21A.24.

3. Not Used.

C. Any pier, moorage, float or launching facility permitted accessory to single-family development or common use facility accessory to subdivision, short subdivision or planned unit development in the conservancy environment shall be subject to the pier, moorage, float and launching facility provisions ISDC 25.16.090 through 25.16.140 of the urban environment; provided, no such authorized structure shall be located within two hundred feet of any other such structure.

25.24.100 Subdivision. The lot standards enumerated in this subsection apply to any lot which has buildable area within the shorelines of the state. Buildable area means that area of the lot, exclusive of any required open space, yards or setbacks upon which a structure may be constructed.

A. The minimum required lot area in the conservancy environment shall be five acres; provided, however, the minimum lot area may be reduced to 40,000 square feet when:

1. All lots are part of an approved subdivision or short subdivision;

2. All lots are served by an approved sewage disposal system;

3. All lots are served by public water;

4. All lots have a minimum width of one hundred fifty feet;

5. The base units per acre for that portion of a site under shoreline management jurisdiction in this case for a planned unit development or multifamily development shall be one.

B. Any existing lot that does not comply with the minimum lot area requirement of subsection A and located wholly or partially within the shoreline of the state shall be subject to the following provisions:

1. If the adjoining property is not under the same ownership as such lot, then the lot shall be considered a separate building site.

2. If the adjoining property is under the same ownership as such lot, then the lot shall not be considered a separate building site until the lot is combined with adjoining property under the same ownership in such a way as to comply with the requirements of subsection A.

C. Submerged land within the boundaries of any waterfront parcel shall not be used to compute lot area, lot dimensions, yards, open space or other similar required conditions of land subdivisions or development; except, where specifically authorized by ordinance, such land may be used in area computations as an incentive to encourage common open space waterfront areas.

D. The foregoing lot area and width standards may be further reduced in direct proportion to the amount of usable area dedicated as common open space within the shorelines of the state as long as the net density remains the same. The common open space shall provide physical access to the ordinary high water mark for the residents of an approved subdivision, or short subdivision; provided, that in no case may the lot standards be reduced below the lot standards required by ISDC Title 21A (the zoning code) for the zone classification in which the lot(s) is (are) located.

E. Lot averaging shall not be used to comply with the minimum lot area requirements of subsection A for any lot wholly or partially within the shoreline.

25.24.110 Utilities. Utility facilities may be permitted in the conservancy environment subject to the general requirements (ISDC 25.24.030) of this chapter and the utility provisions (ISDC 25.16.160) of the urban environment.

25.24.120 Industrial development. Industrial development shall not be permitted in the conservancy environment.

25.24.130 Shoreline protection. A. Shoreline protection may be permitted in the conservancy environment, subject to the shoreline protection provisions (ISDC 25.16.180) of the urban environment.

B. Breakwaters shall not be permitted.

25.24.140 Excavation, dredging and filling. Excavation, dredging and filling may be permitted in the conservancy environment, subject to the excavation, dredging and filling provisions in ISDC 25.16.190 of the urban environment, provided:

A. Excavation, dredging or filling below the ordinary high water mark shall be permitted only as follows:

1. To mitigate conditions which endanger public safety or fisheries resources; or

2. As part of and necessary to roadside or agricultural ditch maintenance that is performed consistent with best management practices promulgated through administrative rules pursuant to the sensitive areas provisions of ISDC chapter 21A.24 and if:

a. the maintenance does not involve any expansion of the ditch beyond its previously excavated size. This limitation shall not restrict the county's ability to require mitigation, pursuant to ISDC chapter 21A.24, or other applicable laws;

b. the ditch was not constructed or created in violation of law;

c. the maintenance is accomplished with the least amount of disturbance to the stream or ditch as possible;

d. the maintenance occurs during the summer low flow period and is timed to avoid disturbance to the stream or ditch during periods critical to salmonids; and

e. the maintenance complies with standards designed to protect salmonids and salmonid habitat, consistent with ISDC chapter 21A.24;

B. Channelizing, straightening or relocating rivers or streams shall not be permitted;

C. Excavation or dredging of marshes, swamps or bogs shall not be permitted, except for water transmission pipelines within existing utilized transmission pipeline corridors, provided that no practicable alternatives exist, impacts are minimized, and appropriate compensatory mitigation is provided consistent with ISDC 21A.24.

25.24.150 Recreation. Recreational development may be permitted in the conservancy environment subject to the general requirements of this chapter (Section 25.24.030) and the recreation provisions (Section 25.16.200) of the urban environment provided:

A. The recreational development will not require any significant filling, excavating or regarding involving more than twenty-five percent of that portion of the site within the shorelines of the state.

B. The construction of indoor swimming pools, gyms and other indoor recreational facilities is prohibited.

C. Piers, moorages, floats or launching facilities constructed in conjunction with recreational development shall not be:

1. Longer than one hundred twenty feet; or
2. Larger than 1350 square feet in surface area.

Chapter 25.32
PROCEDURES

Sections:

25.32.010 Substantial development - permit required - exemption.
25.32.020 Permits - prerequisite to other permits.
25.32.040 Permits - variance.
25.32.050 Permits - conditional use.
25.32.060 Permits - alteration of nonconforming use or development.
25.32.080 Permits - combined hearing authority.
25.32.090 Permits - approval or disapproval - notification - additional conditions - limitations.
25.32.100 Appeals.
25.32.110 Rules of Director.
25.32.120 Enforcement.
25.32.130 Shoreline environment redesignation.

25.32.010 Substantial development - permit required - exemption. A. No development shall be undertaken by any person on the shorelines of the state unless such development is consistent with the policy of Section 2 of the Shoreline Management Act of 1971, and, after adoption and approval, the guidelines and regulations of the Washington State Department of Ecology and the City of Sammamish shoreline master program.

B. No substantial development shall be undertaken by any person on the shorelines of the state without first obtaining a substantial development permit from the Director; provided, that such a permit shall not be required for the development excepted from the definition of substantial development in RCW 90.58.030 and for developments exempted by RCW 90.58.140(9) and (10).

C. Any person claiming exception from the permit requirements of this chapter as a result of the exemptions described in subsection B. of this section may make an application to the Director for such an exemption in the manner prescribed by the Director. Development within the shorelines of the state which does not require a permit shall conform to the master program. Conditions requiring such conformance may be imposed prior to granting exemption from the permit requirement.

25.32.020 Permits - prerequisite to other permits. In the case of development subject to the permit requirements of this title, the City shall not issue any other permit for such development until such time as approval has been granted pursuant to this title. Any development subsequently authorized by the City shall be subject to the same terms and conditions which apply to the development authorized pursuant to this title.

25.32.040 Permits - variance. A. The Director is authorized to grant a variance from the performance standards of this master program only under the conditions enumerated WAC 173-14-150 (Review Criteria for Variances).

B. A variance from City zoning code requirements shall not be construed to mean a variance from shoreline master program use regulations and vice versa.

C. Shoreline variances may not be used to permit a use that is specifically prohibited in an environment designation.

D. The burden of proving that a proposed variance meets these conditions shall be on the applicant; absence of such proof shall be grounds for denial of the application.

E. The fee which shall accompany an application for a shoreline variance shall be as adopted by ordinance.

25.32.050 Permits - conditional use. A. The Director is authorized to issue shoreline conditional use permits only under the following circumstances:

1. The development must be compatible with uses which are permitted within the master program environment in which the development is proposed.

2. The use will cause no unreasonable adverse effects on the shoreline or surrounding properties and uses.

3. The use will promote or not interfere with public use of surface waters.

4. The development of the site will not be contrary to the policies of the master program.

B. The burden of proving that a proposed shoreline conditional use meets the criteria enumerated in subsection A. of this section shall be on the applicant. Absence of such proof shall be grounds for denial of the application; provided, however, that the Director is authorized to determine and impose, on a case-by-case basis, those conditions and standards which may be required to enable any proposed shoreline conditional use to satisfy the criteria established in subsection A. of this section.

25.32.060 Alteration or reconstruction of nonconforming use or development.

A. Applications for substantial development or building permits to modify a nonconforming use or development may be approved only if:

1. The modifications will make the use or development less nonconforming; or

2. The modifications will not make the use or development more nonconforming.

B. A use or development, not conforming to existing regulations, which is destroyed, deteriorated, or damaged more than fifty percent of its fair market value at present or at the time of its destruction by fire, explosion, or other casualty or act of God, may be reconstructed only insofar as it is consistent with existing regulations.

C. The review of applications for the modification of a nonconforming use or development shall be subject to the guidelines enumerated in ISDC 21A.32 (General Provisions-Nonconformance, Temporary Uses, and Re-Use of Facilities).

25.32.080 Permits - combined hearing authority. A. In those cases when proposed development under the jurisdiction of this title also requires a Type 3 or Type 4 decision and a public hearing before the hearing examiner is required, the Department shall issue a recommendation on the proposal and the Hearing Examiner shall conduct a public hearing to receive evidence relating to the issuance of a substantial development permit or exemption therefrom, a shoreline management conditional use permit and/or a shoreline management variance, if applicable.

B. The Hearing Examiner shall conduct the hearing in accordance with the provisions of chapter 20.24 ISDC and shall exercise the powers therein.

C. The decision of the Hearing Examiner shall be the decision of the Director and shall be the final decision of the county with regard to shoreline management.

25.32.090 Permits - approval or disapproval - notification - additional conditions - limitations.

A. In granting or extending a permit, the Director may attach thereto such conditions, modifications and restrictions regarding the location, character and other features of the proposed development and related development and activity outside of the shoreline as he finds necessary to make the permit compatible with the criteria set forth in ISDC 25.04.030 and 25.32.010. Such conditions may include requirement to post a performance bond assuring compliance with permit requirements, terms and conditions.

B. Issuance of a substantial development permit does not constitute approval pursuant to any other federal, state or county laws or regulations.

25.32.100 Appeals. A. Appeals from the final decision of the City with regard to shoreline management shall be governed solely by the provisions of RCW 90.58.180.

B. The effective date of City's decision shall be the date of filing with the Department of Ecology as defined in RCW 90.58.140.

C. When a hearing and decision has occurred pursuant to Section 25.32.080 and the examiner's recommendation with regard to disposition of a proposed development pursuant to Titles 20 and 21A of this code requires City Council action, the final decision of the county pursuant to this title shall be effective on the date of filing as defined in RCW 90.58.140 for the purposes of appeal as provided in RCW 90.50.140. However, no development may occur until the Sammamish City Council has taken final action on the Hearing Examiner's recommendation required by Titles 20 and/or 21A of this code.

25.32.110 Rules of Director. The Director is authorized to adopt such rules as are necessary and appropriate to implement this chapter. The Director may prepare and require the use of such forms as are necessary to its administration.

25.32.120 Enforcement. A. The Director is authorized to enforce the provisions of this title, the ordinances and resolutions codified in it, and any rules and regulations promulgated thereunder pursuant to the enforcement and penalty provisions of Title 23.

B. Any person found to have willfully engaged in activities on the shorelines of the state in violation of this title or the Shoreline Management Act of 1971 or in violation of the master program, rules or regulations adopted pursuant thereto is guilty of a gross misdemeanor, and shall be punished by a fine of not less than twenty-five dollars nor more than one thousand dollars, or by imprisonment in the county jail for not more than ninety days, or by both fines and imprisonment; provided, that the fine for the third and all subsequent violations in any five-year period shall be not less than five hundred dollars nor more than ten thousand dollars.

C. The City Attorney shall bring such injunctive, declaratory, or other actions as are necessary to insure that no uses are made of the shorelines of the state in conflict with the provisions of this title or the Shoreline Management Act of 1971 or in conflict with the master program, rules or regulations adopted pursuant thereto, and to otherwise enforce the provisions of this chapter and the Shoreline Management Act of 1971.

D. Any person subject to the regulatory provisions of this title who violates any provision of this title or the provisions of a permit issued pursuant thereto shall be liable for all damage to public or private property arising from such violation, including the cost of restoring the affected area, within a reasonable time, to its condition prior to such violation. The City Attorney shall bring suit for damages under this subsection on behalf of the City Council. Private persons shall have the right to bring suit for damages under this subsection on their own behalf and on behalf of all persons similarly situated. The court on its discretion may award attorney's fees and costs of the suit to the prevailing party.

25.32.130 Shoreline environment redesignation. A. Shoreline environments designated by the master program may be redesignated by the City Council upon finding that such a redesignation will be consistent with:

1. The policy of Section 2 of the Shoreline Management Act of 1971;
2. The goals, objectives and policies of the master program;
3. The designation criteria of the shoreline environment designation requested.

B. Application for redesignation shall be made on forms and processed in a manner prescribed in chapter 20.24 ISDC and chapter 20.20 ISDC

C. The fee which shall accompany an application for a shoreline redesignation shall be as adopted by ordinance.

D. Applications for redesignation shall not be accepted by the Department if a request for redesignation involving the same designation for substantially the same property has been denied within the last year.

E. The report and recommendation of the Department shall be forwarded to the Hearing Examiner for consideration together with all relevant testimony at a public hearing to be held consistent with the procedures for a zone reclassification as provided in chapter 20.24 ISDC